TRANSACTIONS

OF THE

AMERICAN SOCIETY

OF

MECHANICAL ENGINEERS.

VOL. XVIII.

XXXIVth Meeting, New York, 1896.
XXXVth Meeting, Hartford, Conn., 1897.

NEW YORK CITY:
PUBLISHED BY THE SOCIETY,
From the Library Building,
No. 12 West 31st Street.
1897.

Press of J. J. Little & Co.
Astor Place, New York.

OFFICERS

OF THE

AMERICAN SOCIETY OF MECHANICAL ENGINEERS,

1896-1897,

FORMING THE STATUTORY COUNCIL.

PRESIDENT.

Worcester R. Warner	Cleveland, Ohio.

VICE-PRESIDENTS.

George W. Melville	Washington, D. C.
Chas. H. Manning	Manchester, N. H.
Francis W. Dean	Boston, Mass.

Terms expire at Annual Meeting of 1897.

E. S. Cramp	Philadelphia, Pa.
S. T. Wellman	Cleveland, Ohio.
W. F. Durfee	New York City.

Terms expire at Annual Meeting of 1898.

MANAGERS.

John C. Kafer	New York City.
Chas. A. Bauer	Springfield, O.
Arthur C. Walworth	Boston, Mass.

Terms expire at Annual Meeting of 1897.

Norman C. Stiles	Watertown, N. Y.
E. D. Meier	St. Louis, Mo.
Geo. W. Dickie	San Francisco, Cal.

Terms expire at Annual Meeting of 1898.

H. S. Haines	Atlanta, Ga.
Gus C. Henning	New York City.
A. Wells Robinson	So. Milwaukee, Wis.

Terms expire at Annual Meeting of 1899.

TREASURER.

Wm. H. Wiley	No. 53 East 10th St., New York City.

SECRETARY.

Prof. F. R. Hutton	No. 12 West 31st St., New York City.

HONORARY COUNCILLORS.

Past Presidents of the Society.

R. H. Thurston	1880—1882	Ithaca, N. Y.
E. D. Leavitt	1882—1883	Cambridgeport, Mass.
John E. Sweet	1883—1884	Syracuse, N. Y.
Coleman Sellers	1885—1886	Philadelphia, Pa.
Horace See	1887—1888	New York City.
Henry R. Towne	1888—1889	Stamford, Conn.
Oberlin Smith	1889—1890	Bridgeton, N. J.
Robert W. Hunt	1890—1891	Chicago, Ill.
Charles H. Loring	1891—1892	Brooklyn, N. Y.
Charles E. Billings *	1895	Hartford, Conn.
John Fritz	1895—1896	Bethlehem, Pa.

[Note.—The former Presidents of the Society are members of the Council for life or during their retention of active membership in the Society.]

* Unexpired term of E. F. C. Davis.

PAST OFFICERS.

(EXECUTIVE.)

PRESIDENTS.

R. H. THURSTON (April 7th, 1880—Nov. 3d, 1882), E. D. LEAVITT, JR. (Nov. 3d, 1882—Nov. 3d, 1883), JOHN E. SWEET (Nov. 3d, 1883—Nov. 7th, 1884), J. F. HOLLOWAY * (Nov. 7th, 1884—Nov. 13th, 1885), COLEMAN SELLERS (Nov. 13th, 1885—Dec. 2d, 1886), GEO. H. BABCOCK † (Dec. 2d, 1886—Dec. 1st, 1887), HORACE SEE (Dec. 1st, 1887—Oct. 18th, 1888), HENRY R. TOWNE (Oct. 18th, 1888—Nov. 22d, 1889), OBERLIN SMITH (Nov. 22d, 1889—Nov. 14th, 1890), ROBT. W. HUNT (Nov. 14th, 1890—Nov. 20th, 1891), CHAS. H. LORING (Nov. 20th, 1891—Nov. 29th, 1892), ECKLEY B. COXE ‡ (Nov. 29th, 1892—Dec. 4th, 1894), E. F. C. DAVIS § (Dec. 4th, 1894—Aug. 6th, 1895), CHAS. E. BILLINGS ‖ (Aug. 6th, 1895—Dec. 3d, 1895), JOHN FRITZ (Dec. 3d, 1895—Dec. 5th, 1896).

TREASURERS AND SECRETARIES.

Treasurers.—LYCURGUS B. MOORE (April 7th, 1880—Dec. 2d, 1881), CHAS. W. COPELAND ¶ (Dec. 2d. 1881—Nov. 7th, 1884).

Secretaries.—LYCURGUS B. Moore (*Acting*, April 7th, 1880—Nov. 4th, 1880), THOS WHITESIDE RAE ** (Nov. 4th, 1880—March 1st, 1883).

MEMBERS OF PREVIOUS COUNCILS.

VICE-PRESIDENTS.

HENRY R. WORTHINGTON, †† COLEMAN SELLERS, ECKLEY B. COXE, ‡ Q. A. GILLMORE, WM. H. SHOCK, ALEX. L. HOLLEY, ‡‡ F. A. PRATT, W. P. TROWBRIDGE, §§ E. D. LEAVITT, JR., CHAS E. EMERY, JOHN FRITZ, HENRY MORTON, WM. METCALF, S. B. WHITING, A. B. COUCH, W. R. ECKHART, J. V. MERRICK, CHARLES W. COPELAND, ¶ OLIN LANDRETH, HENRY R. TOWNE, C. H. LORING, HORACE SEE, ALLAN STIRLING, JOS. MORGAN, JR., C. T. PORTER, HORACE S. SMITH, W. S. G. BAKER, H. G. MORRIS, C. J. H. WOODBURY, THOS. J. BORDEN, WM. KENT, CHAS. B. RICHARDS, JOEL SHARP, GEO. W. WEEKS, DE VOLSON WOOD, S. W. BALDWIN, JOHN F. PANKHURST, ALEXANDER GORDON, GEO. I. ALDEN, E. F. C. DAVIS, IRVING M. SCOTT, C. W. HUNT, THOS. R. PICKERING, EDWIN REYNOLDS, C. E. BILLINGS, PERCIVAL ROBERTS, JR., H. J. SMALL, F. H. BALL, JESSE M. SMITH, and M. L. HOLMAN.

MANAGERS.

W. P. TROWBRIDGE, §§ T. N. ELY, J. C. HOADLEY, ‖‖ WASHINGTON JONES, WM. B. COGSWELL, F. A. PRATT, CHAS. B. RICHARDS, S. B. WHITING, J. F. HOLLOWAY, GEO. W. FISHER, ALLAN STIRLING, GEO. H. BABCOCK, S. W. ROBINSON, JNO. E. SWEET, R W. HUNT, CHAS. T. PORTER, C. J. H. WOODBURY, W. F. DURFEE, OBERLIN SMITH, C. C. WORTHINGTON, WM. LEE CHURCH, WM. HEWITT, C. H. MORGAN, H. A. HILL, WM. KENT, S. T. WELLMAN, F. G. COGGIN, J. T. HAWKINS, T. R. MORGAN, SR., S. W. BALDWIN, FRED'K GRINNELL, MORRIS SELLERS, FRANK H. BALL, GEO. M. BOND, WM. FORSYTH, JAS. E. DENTON, CARLETON W. NASON, H. H. WESTINGHOUSE, ANDREW FLETCHER, WORCESTER R WARNER, COLEMAN SELLERS JR., JAS. M. DODGE, ROBT. FORSYTH, JESSE M. SMITH, CHAS. H. MANNING, C. W. PUSEY, JOHN THOMSON, JOHN B. HERRESHOFF, L. B. MILLER, and W. S. RUSSEL.

---

* Died, Sept. 1st, 1896.

† Died, Dec. 16, 1893.

‡ Died, May 13, 1895.

§ Died, Aug. 6, 1895.

‖ Unexpired term of Mr. Davis.

¶ Died, Feb. 7, 1895.

** Died, May 27, 1893.

†† Died, Dec. 17, 1880.

‡‡ Died, Jan. 29, 1882.

§§ Died, Aug 12, 1892.

‖‖ Died, Oct. 21, 1886.

NOTE.

The considerable bulk of the annual volume of *Transactions* has induced the Publication Committee to direct that the full list of members of the Society should be omitted from the preliminary matter therein. The list which would have been published in this volume is that which was corrected up to July, 1897, and which was issued at that time in pamphlet form as a second edition of the Eighteenth Catalogue. The following summary records the number of members in each grade:

Honorary Members	15
Members	1,355
Associate Members	111
Junior Members	318
Total Membership	1,799
Life Members*	68

---

* These Life Members are included in the total membership above, in the class to which they belong.

RULES OF THE AMERICAN SOCIETY OF MECHANICAL ENGINEERS.

Art. 1. The objects of the American Society of Mechanical Engineers are to promote the Arts and Sciences connected with Engineering and Mechanical Construction, by means of meetings for social intercourse and the reading and discussion of professional papers, and to circulate, by means of publication among its members, the information thus obtained.

Art. 2. All persons connected with engineering may be eligible for admission into the Society.

Art. 3. The Society shall consist of Honorary Members, Members, Associates, and Juniors.

Art. 4. Honorary Members, not exceeding twenty-five in number, may be elected. They must be persons of acknowledged professional eminence.

Art. 5. To be eligible as a Member, the candidate must be not less than thirty years of age, and must have been so connected with engineering as to be competent as a designer or as a constructor, or to take responsible charge of work in his department, or he must have served as a teacher of engineering for more than five years.

Note.—The Rules of the Society, adopted in 1880, were in force until 1884, when they received a general revision by a careful committee, whose report, distributed by letter ballot, was adopted November 5, 1884. In December, 1894, a similar extensive revision was made under direction of the Council, and the present rules are those of 1894. They include the amendments made in 1889, 1891, and 1893, which were the only changes since the revision of 1884.

ART. 6. To be eligible as an Associate, the candidate must be not less than twenty-six years of age, and must have the other qualifications of a member; or he shall have been so connected with engineering as to be competent to take charge of work, and to coöperate with engineers.

ART. 7. To be eligible as a Junior, the candidate must have had such engineering experience as will enable him to fill a responsible position, or he must be a graduate of an engineering school.

ART. 8. All Honorary Members, Members, and Associates shall be equally entitled to the privileges of membership. Juniors shall not be entitled to vote, nor to be officers of the Society.

ART. 9. Nominees for Honorary Membership must be proposed by at least five Members who are not officers of the Society. References shall not be required of a nominee for Honorary Membership, but the grounds upon which the application is made must be fully set forth in writing and signed by the proposers.

ART. 10. A candidate for admission to the Society, as a Member or as an Associate, must make an application on a form to be prepared by the Council, which shall contain a written statement giving a complete account of his engineering experience and an agreement that he will, if elected, conform to the laws, rules, and requirements of the Society. He must refer to at least five Members or Associates personally known to him. A candidate for admission to the Society as a Junior must make an application on the same form and refer to not less than three Members or Associates personally known to him.

ART. 11. The referees for each candidate for admission to the Society shall be requested to make a confidential communication on a form to be prepared by the Council, setting forth in detail such information, personally known by the referee, as shall enable the Council to arrive at a proper estimate of the eligibility of the candidate for admission to the Society. Such confidential communications shall be destroyed by the Secretary as soon as the vote has been officially declared.

ART. 12. All applications for membership must be presented to the Council, and this body shall consider each application, assigning to each, with the applicant's consent, the grade in the Society to which, in its opinion, his qualifications entitle him. The names of those candidates recommended for election by the Society shall be immediately printed on a ballot, and the ballot mailed at once by the Secretary to each voting member of the Society. Persons desiring to change their grade of membership from junior to associate or from associate to member shall make an application in the same manner and on the same form as that required for a new applicant.

Art. 13. A member entitled to vote may leave the name of any candidate on the ballot untouched to vote in favor of the admission of the candidate to the Society, or he may erase the name to vote against it. He shall enclose the ballot so approved by him in a sealed blank envelope, and enclose this envelope in a second envelope, on which he shall write his name, and mail the same to the Secretary of the Society. A ballot without such endorsement shall be rejected as defective. The rejection of a candidate by seven voters shall defeat his election.

Art. 14. The aforesaid envelopes containing the ballots shall be opened by the Council, at any meeting thereof, and the names of those elected shall be announced in the next meeting of the Society. The names of applicants not elected shall not be announced, nor recorded in the proceedings.

Art. 15. Endorsers of any applicant not elected may, within three months after such failure to be elected, lay before the Council written evidence that an error was then made. The Council may then, by a three-fourths vote, order another similar ballot by the Society, in which case thirteen negative votes shall be required to defeat the candidate.

Art. 16. Honorary members shall be elected by the unanimous vote of the Council, through a letter ballot, not less than sixty days subsequent to the proposal, a notice of which proposed election shall have been mailed at once by the Secretary to each member of the Council.

Art. 17. Each person elected, excepting honorary members, must subscribe to the Rules of the Society, and pay the initiation fee before he can receive a certificate entitling him to the rights and privileges of the Society, and to wear the emblem appropriate to his grade. If this payment is not made within six months of the election, the same shall be void, unless the time is extended by the Council. The emblems of each grade of membership shall be worn by those only who belong to that grade.

ART. 18. The initiation fee of a member or an associate shall be twenty-five dollars, and the annual dues shall be fifteen dollars, payable in advance. The initiation fee of a junior shall be fifteen dollars, and his annual dues ten dollars, payable in advance. A junior being promoted to any other grade of membership shall pay an additional initiation fee of ten dollars. Any member or associate may become a Life Member in the same grade, by the payment of two hundred dollars at one time, and shall not be liable thereafter to annual dues.

The Council shall have the power, for special reasons, by unanimous vote, through a letter ballot, to admit to life membership, without the payment of the sum above named, such person as for a long term of years has been a member or an associate, when such a procedure would in its judgment be for the best interests of the Society; provided that notice of such action shall have been given at a previous meeting of the Council.

ART. 19. Any member of the Society in arrears may, at the discretion of the Council, be deprived of the publications of the Society, or, when in arrears for one year, he may be stricken from the list of members. Such person may be restored to the privileges of membership by the Council on payment of all arrears.

ART. 20. The affairs of the Society shall be managed by a Council, consisting of a President, six Vice-Presidents, nine Managers, and a Treasurer, who shall also be the Trustees of the Society.

All past (ex) Presidents of the Society, while they retain their membership therein, shall be known as Honorary Councillors, and shall be entitled to receive notices of all meetings of the Council and may take part in any of its deliberations; they shall be entitled to vote upon all questions except such as affect the legal rights or obligations of the Society or its members.

ART. 21. The members of the Council shall be elected from among the members and associates of the Society at the annual meetings, and shall hold office as follows:

The President and the Treasurer for one year; and no person shall be eligible for immediate re-election as President who shall have held that office for two consecutive years; the Vice-Presidents for two years, and the Managers for three years; and no

Vice-President or Manager shall be eligible for immediate re-election to the same office at the expiration of the term for which he was elected.

ART. 22. A Secretary, who shall be a member of the Society, shall be appointed for one year by a majority of the members of the Council at its first meeting after the annual election, or as soon thereafter as the votes of a majority of the members of the Council can be secured for a candidate. The Secretary may be removed by a vote of twelve members of the Council, at any time after one month's notice has been given him by a majority of its members to show cause why he should not be removed, and he has been heard to that effect. The Secretary may take part in any of the deliberations of the Council, but shall not have a vote therein. His salary shall be fixed for the time he is appointed by a majority vote of the Council.

ART. 23. At each annual meeting, a President, three Vice-Presidents, three Managers and a Treasurer shall be elected, and the term of office of each shall continue until the end of the meeting at which their successors are elected.

ART. 24. The duties of all officers shall be such as usually pertain to their offices or may be delegated to them by the Council or by the Society. The Council may, in its discretion, require bonds to be given by the Treasurer.

ART. 25. The Council may, by vote of a majority of all its members, declare the place of any officer vacant, on his failure for one year, from inability or otherwise, to attend the Council meetings, or to perform the duties of his office. All such vacancies and those occurring by death or resignation shall be filled by the appointment of the Council, and any person so appointed shall hold office for the remainder of the term for which his predecessor was elected or appointed; *provided* that the said appointment shall not render him ineligible at the next annual meeting.

ART. 26. Five members of the Council shall constitute a quorum. Members of the Council absent from a meeting may vote by letter upon subjects stated in the call for the meeting, said vote to be deposited with the Secretary.

ART. 27. The President on assuming office shall appoint a Finance Committee and a Publication Committee and a Library Committee of five members each. The appointment of two members of each Committee shall expire at the end of each

Art. 41. Unless otherwise ordered, papers shall be read in the order in which their text is received by the Secretary. Before any paper appears in the *Transactions* of the Society, a copy of the paper shall be sent to the author, and, so far as possible, a copy of the reported discussion shall be sent to every member who took part in the same, with requests that attention shall be called to any errors therein.

Art. 42. The Society shall claim no exclusive copyright in papers read at its meetings, nor in reports of discussions, except in the matter of official publication with the Society's imprint, as its *Transactions*. The Secretary shall have sole possession of papers between the time of their acceptance by the Publication Committee and their reading, together with the drawings illustrating the same ; and at the time of such reading, or as soon thereafter as practicable, he shall cause to be printed, with the authors' consent, copies of such papers, " subject to revision," with such illustrations as are needed for the *Transactions*, for distribution to the members and for the use of technical newspapers, American and foreign, which may desire to reprint them in whole or in part. The policy of the Society in this matter shall be to give papers read before it the widest circulation possible, with the view of making the work of the Society known, encouraging mechanical progress, and extending the professional reputation of its members.

Art. 43. The author of each paper read before the Society shall be entitled to twelve copies, if printed, for his own use, and all members shall have the right to order any number of reprints of papers at a cost to cover paper and printing ; *provided*, that said copies are not intended for sale.

Art. 44. The Society is not, as a body, responsible for the statements of fact or opinion advanced in papers or discussions, at its meetings ; and it is understood that papers and discussions should not include matters relating to politics or purely to trade.

Art. 45. These rules may be amended, at any annual meeting, by a two-thirds vote of the members present ; *provided*, that written notice of the proposed amendment shall have been given at a previous meeting.

CONTENTS OF VOLUME XVIII.

LIST OF ILLUSTRATIONS.

DCXCIX.

PROCEEDINGS

OF THE

NEW YORK MEETING

(XXXIVth)

OF THE

AMERICAN SOCIETY OF MECHANICAL ENGINEERS,

December 1st to December 4th, 1896.

THE seventeenth annual meeting of the Society (being also the thirty-fourth convention) was convened in New York city on Tuesday, December 1, 1896, in the auditorium of the Society house. It was early evident that an unusually large attendance was to be expected, and before the hour set for the president's opening address the rooms were full.

The meeting was called to order about nine in the evening by President John Fritz, who, after a few words of greeting, delivered his address, entitled "The Progress in the Manufacture of Iron and Steel in America, and the Relations of the Engineer to It." It was illustrated by models of the tools used in the lathe which had been built to handle massive ingots and forgings as compared with the old hand-tool, which Mr. Fritz had himself used, before the slide-rest was introduced, and when he was an apprentice lad. The end of the hall behind the speaker was covered by a full-size drawing of the modern large lathe with a full-size ingot in place. After the reading Messrs. Jaques, Carnegie, Hunt, Wellman, Kent Forsythe, and Stirling spoke in complimentary reference to the American progress in steel-making and Mr. Fritz's relation to it.

Messrs. Bonner and Rockwood were appointed tellers by the chair to count the ballots cast for officers of the Society for the coming year, and to report at the business session on the following morning. A social reunion of members followed the adjournment.

Second Day. Wednesday, December 2d.

The regular sessions of the annual meeting began with the session of this morning, at ten o'clock, in the auditorium. The registration of members indicated that the size and numerical success of the meeting were to be phenomenal. The plan was again adopted of numbering the lines on the official register, and providing that a monogram button badge worn at the convention should bear a number corresponding to the number on the register. Fresh reprints from the official register were distributed every morning, giving the latest additions, and thus it will be seen that every one could immediately ascertain the name of every one else without the embarrassment of a direct question to this end, and the practical result showed that the meeting was one of the most successful on the social side that had ever been held. The register showed the following persons in attendance from the list of members. The total registered, including guests, was five hundred and forty-six.

Ackerman, W. S.
Alberger, Louis R.
Alden, Geo. I.
Aller, A.
Almirall, J. A.
Almond, Thos. R.
Almy, Darwin.
Archer, Ed. R.
Aslakson, B.
Bailey, W. H.
Baker, C. W.
Baldwin, F. R.
Baldwin, S. W.
Ball, Frank H.
Bang, H. A.
Bardwell, A. F.
Barnard, G. A.
Barnes, Abel T.
Barr, John H.
Batchelor, Chas.
Bates, Ed. T.
Bauer, Chas. A.
Baylis, R. N.
Beaman, E. A.
Beardsley, A.
Billings, C. E.
Binsse, H. B.
Bole, Wm. A.
Bond, Geo. M.
Bonner, Wm. T.
Booraem, J. F.
Bourne, S. N.
Boyer, F. H.
Bradley, W. H.
Brashear, J. A.
Bristol, W. H.
Brooks, E. C.
Brown, R. S.
Brown, W. C.
Bulkley, H. W.
Bunn, F. W.
Bunnell, S. H.
Butcher, Jos. J.
Caldwell, A. J.
Canfield, H.
Carnegie, A.
Carpenter, A. H.
Cary, A. A.
Case, Theo. N.
Cassier, Louis.
Chase, H. S.
Cheney, W. L.
Christensen, A. C.
Christie, W. W.
Churchill, W. W.
Clarke, S. J.
Clements, W. L.
Cogswell, W. B.
Cole, Francis J.
Coleman, G. F.
Colles, Geo. W.
Colvin, F. H.
Conklin, M. T.
Connell, J. A.
Conover, E. K.
Corbett, C. H.
Coster, E. L.
Cottier, Jos.
Cox, J. D.
Cramp, E. S.
Cremer, Jos. M.
Crowell, H. C.

Cullingworth, G. R.
Curtis, R. E.
Darling, E. A.
Darrin, D. H.
Davis, L. K.
Dean, C. P.
Deck, H. S.
Dinkel, Geo.
Dobbins, S. D.
Doran, W. S.
Doty, P. A.
Drewett, W. A.
Durfee, W. F.
Earll, C. I.
Eastment, W. H.
Edson, J. B.
Edwards, L. T.
Emery, C. E.
Emory, F. L.
Faber Du Faur, A.
Fairbanks, R. N.
Farrand, D.
Ferguson, J. W.
Fisher, Clark.
Fleming, J. B.
Flinn, T. F.
Floyd, F. W.
Forbes, W. D.
Forsythe, Robt.
Foster, E. H.
Freeman, J. R.
Freeman, S. E.
Frevert, H. F.
Frith, A. J.
Fritz, John.
Fry, Alfred Brooks.
Gantt, H. L.
Gaskin, E. F. W.
Gibbs, Geo.
Giles, E. C.
Girvin, C. J.
Gobeille, J. L.
Goetz, F. A.
Goodell, J. M.
Gordon, Alex.
Gordon, H. D.
Goubert, A. A.
Gould, W. V.
Granger, A. S.
Gray, Thos.
Green, S. M.
Greene, A. M.
Greene, D. J.
Greenleaf, G. E.
Gregory, Wm.
Grimm, P. H.
Grist, B. W.
Gwilliam, G. T.
Hale, R. S.
Hall, Fred. A.
Halsey, F. A.
Hamilton, J. V.
Hammett, H. G.
Harding, F. W.
Hartness, Jas.
Hawkins, J. T.
Hayward, F. H.
Hemenway, F. F.
Henderson, Alex.
Henning, G. C.
Herman, L.
Hershey, M. E.
Hibbard, H. D.
Higgins, C. P.
Hill, Warren E.
Hillard, C. J.
Hillmann, G.
Hoffecker, W. L.
Hopton, W. E.
Horstman, H. J.
Howell, E. I. H.
Hunt, C. W.
Hunt, R. W.
Hunt, W. F.
Hutchinson, Cary T.
Hutton, F. R.
Ide, Albert L.
Idell, F. E.
Jacobi, A. W.
Jacobus, D. S.
Janson, E. N.
Jaques, Wm. H.
Jenks, L. H.
Jenks, Wm. H.
Johnson, Arthur E.
Johnson, Jos. E., Jr.
Johnson, Réno De O.
Jones, H. K.
Kafer, John C.
Katte, Edwin B.
Kenrick, A. E.
Kent, Ellis C.
Kent, Wm.
King, C. C.
Kirchhoff, Chas.
Knickerbocker, John.
Kruesi, John.
Laforge, F. H.
Lane, Harry M.
Lane, J. S.
Langlotz, Chas.
Langlotz, Robt.
Laval, Geo. De.
Le Van, W. Barnet.
Leighton, Ed. I.
Leverich, G.
Lewis, David J., Jr.
Lieb, Jno. W., Jr.
Lipps, Henry, Jr.
Logan, John W.
Longnecker, C. K.
Lord, H. F.
Loring, C. H.
Low, Fred. R.
Lyall, Wm. L.
McBride, Jas.
McCaffrey, R. S.
McElroy, Sam'l.
McGill, C. F.
McKee, J. J.
McMannis, Wm.
Mackintosh, Fred.
Manning, C. H.
Marble, H. M.
Marshall, W. H.
Mason, Frank S.
Matlack, D. J.
Mattes, W. F.
May, De Courcy.
Mayo, John B.
Mead, Frank S.
Meatz, John T.
Melvin, David N.
Merriam, H. P.
Messimer, Hillary.
Mesta, Geo.
Metcalf, Wm.
Middleton, P. H.
Miller, Alex.
Miller, Fred. J.

Miller, Horace B.
Miller, Lebbeus B.
Miller, Spencer.
Mitchell, B. M.
Moeller, Franklin.
Monaghan, Wm. F.
Montgomery, H. M.
Moore, D. G.
Moore, M. F.
Morse, Chas. M.
Morton, Geo. L.
Moulthrop, Leslie.
Mumford, E. H.
Newcomb, Chas. L.
Newhall, John B.
Nichols, O. F.
Nicoll, Chas. H.
Norris, Henry McCoy.
Norris, J. H.
Noyes, Henry F.
Olin, F. W.
Oviatt, David B.
Parsons, H. de B.
Paul, John Wallace.
Payne, S. H.
Pearson, Wm. A., Jr.
Penny, Edgar.
Perkins, Thos. C.
Platt, Geo. H.
Platt, John.
Plummer, Frank J
Pond, Frank H.
Pratt, Chas. R.
Quick, Howard Prescott.
Quimby, W. E.
Quint, Alanson D.
Rankin, Thos. L.
Raqué, Philip E.
Redwood, Iltyd I.
Reed, W. T.
Reist, H. G.
Rettew, Chas. E.
Rice, Arthur L.
Richards, Chas. R.
Richards, Francis H.
Richards, Frank.
Richmond, Geo.
Riddell, John.
Ridsdale, T. W.
Riesenberger, Adam.
Robinson, J. M.
Rockwood, Geo. I.
Roelker, H. B.
Rogers, W. S.
Rohrer, A. L.
Ross, E. L.
Rowland, A. E.
Rowland, Chas. B.
Rowland, Geo.
Rowland, Thos. Fitch.
Rowland, Thos. F., Jr.
Sabin, A. H.
Sahlin, Axel.
Sargent, John W.
Sattler, Wm. R.
Schaefer, John V.
Scheffler, F. A.
Schmidt, Chas. R.
Scholl, J. S.
Schumann, Francis.
Schutte, Louis.
Scott, Seaton M.
Seaver, John Wright.
Sergeant, Chas. H.
Sewall, M. W.
Seymour, Jas. Alward.
Shellenberger, L. R.
Shelmire, W. H.
Shipley, Thos.
Simpson, Wm. L.
Simpson, Geo. R.
Sinclair, Angus.
Slater, Fred. Raymond.
Smith, Chas. P.
Smith, Geo. H.
Smith, Howard Wells.
Smith, Oberlin.
Snell, Henry I.
Snow, Sylvester M.
Spangler, H. W.
Sparrow, Ernest Packard.
Spaulding, H. C.
Spies, Albert.
Spilsbury, E. G.
Stangland, B. F.
Stanton, John.
Stearns, Albert.
Stetson, Geo. R.
Stevenson, A. A.
Stiles, Norman C.
Stillman, F. H.
Stirling, Allan.
Stratton, W. H.
Svenson, J. A. F.
Swasey, Ambrose.
Sweet, John E.
Tabor, Harris.
Taylor, John T.
Taylor, Wm. M.
Thayer, Winthrop.
Thomas, Chas. W.
Thompson, Edgar B.
Thompson, Ed. P.
Thomson, John.
Thurston, Robt. H.
Tolman, Jas. P.
Torrance, Kenneth.
Torrey, H. G.
Towne, F. T.
Towne, Henry R.
Trask, Geo. F. D.
Tucker, Wm. B.
Turner, John.
Uehling, Ed. A.
Uhlenhaut, Fritz, Jr.
Van Derhoef, G. N.
Varney, W. W.
Waldo, Leonard.
Waldron, F. A.
Wallace, F. A.
Walworth, A. C.
Ward, W. E.
Warner, Worcester R.
Warren, B. H.
Watson, Wm.
Webb, J. B.
Webber, S. S.
Weber, F. C.
Webster, Hosea.
Webster, Wm. Reuben, Jr.
Webster, Wm. Richardson
Wellman, S. T.
Wheeler, F. Meriam.
Wheelock, Jerome.
Whinery, Sam'l.
Whittier, Chas.
Wiggin, Wm. H.
Wiley, Wm. H.
Wiley, W. O.
Willcox, C. H.

Williams, Franklin.
Williams, Howard E.
Willis, Ed. J.
Winship, J. G.
Wood, De Volson.
Wood, Jos. L.
Wood, Matthew P.
Woodbury, C. J. H.
Woolson, Ira H.
Woolson, O. C.
Worthington, C. C.
Wright, Jas. Knox.
Wright, Louis S.
Wyman, H. W.
Yereance, Wm. B.
York, H. W.
Young, Wm. S.
Zehnder, Chas. H.
Zimmermann, Wm. F.

The first business of the General Session was the Annual Reports of the Council and the Standing Committees, which were read by the Secretary as follows:

ANNUAL REPORT OF THE COUNCIL.

The Council must begin the Annual Report to the Society, of business which has been transacted during the Society year, by referring to the loss which has been experienced in the death of one of the members of the Honorary Council, past President J. F. Holloway. The minute passed by the Council at its first meeting subsequent to Mr. Holloway's death is as follows:

IN MEMORIAM.

The American Society of Mechanical Engineers desires to place upon the records of the Society and of its Council a minute expressive of the sense of personal loss and sorrow which its members feel upon the death of Mr. J. F. Holloway, member of the Society and Past President.

Mr. Holloway had been one of the charter members of the Society, connecting himself with it in 1880, and had been the moving spirit in the conduct of one of its most successful meetings of those early years—that in the city of Cleveland, in 1883. The Society, recognizing his ability as an engineer and executive, made him its choice to the office of president for the term 1884-85, and his wise counsel and enthusiastic interest in the Society and its welfare made his service among the Board of Honorary Councillors an opportunity for enlisting his coöperation in much that has concerned the growth of the Society during the time since 1889. In addition, he had been a trusted member of the Finance Committee of the Society during the time of his residence in New York City.

The formal mould of resolutions does not seem to fit a proper voicing of the spirit which pervades the Society at the death of one whom its members had grown to know so well, and particularly whom they had learned to respect and love as a man. The singularly sound judgment, his business and professional experience, his unfailing tact and unselfish devotion to the interests of engineering and those who professed it, and above all his self-effacing consideration for others, made him one whom the Society will most profoundly miss.

While strangers can with but bated breath refer to the nearer and closer loss which has come to the members of Mr. Holloway's family, the members of the Council would yet venture to tender their heartfelt sympathy in the bereavement which his death has caused.

Resolved, That the Secretary be directed and requested to arrange for a session, outside the regular series, to be provided at the annual meeting, at which an opportunity may be given to the friends of Mr. Holloway to give voice to the feeling of loss and esteem which they would desire to record.

Resolved, That copies of the proceedings of that Memorial Session and of the action of the Council be sent to the family of the late Past President, J. F. Holloway.

The Council has held five meetings during the year for the transaction of the regular routine business and the consideration of new matters affecting the policy of the Society. The routine business has been the consideration of blank applications for membership and the grading of such applicants pursuant to the provisions of the Rules and the judgment of the Council in applying them. The membership of the Society, including those passed for ballot previous to this annual meeting, is as follows:

Honorary members	16
Members	1,342
Associate members	104
Junior members	300
Total membership	1,762
Life members	65

The Council has received many applications from libraries of technical schools and public libraries for the receipt of its volumes of *Transactions* as a gift for use in their reference departments. The Council has felt desirous of meeting the wishes embodied in these requests, in view of the benefits which the papers of the Society may be expected to confer and the advantage of being well and favorably known among the users of such collections. The difficulty, however, of meeting the very con-

Williams, Franklin.
Williams, Howard E.
Willis, Ed. J.
Winship, J. G.
Wood, De Volson.
Wood, Jos. L.
Wood, Matthew P.
Woodbury, C. J. H.
Woolson, Ira H.
Woolson, O. C.
Worthington, C. C.
Wright, Jas. Knox.
Wright, Louis S.
Wyman, H. W.
Yereance, Wm. B.
York, H. W.
Young, Wm. S.
Zehnder, Chas. H.
Zimmermann, Wm. F.

The first business of the General Session was the Annual Reports of the Council and the Standing Committees, which were read by the Secretary as follows:

ANNUAL REPORT OF THE COUNCIL.

The Council must begin the Annual Report to the Society, of business which has been transacted during the Society year, by referring to the loss which has been experienced in the death of one of the members of the Honorary Council, past President J. F. Holloway. The minute passed by the Council at its first meeting subsequent to Mr. Holloway's death is as follows:

IN MEMORIAM.

The American Society of Mechanical Engineers desires to place upon the records of the Society and of its Council a minute expressive of the sense of personal loss and sorrow which its members feel upon the death of Mr. J. F. Holloway, member of the Society and Past President.

Mr. Holloway had been one of the charter members of the Society, connecting himself with it in 1880, and had been the moving spirit in the conduct of one of its most successful meetings of those early years—that in the city of Cleveland, in 1883. The Society, recognizing his ability as an engineer and executive, made him its choice to the office of president for the term 1884-85, and his wise counsel and enthusiastic interest in the Society and its welfare made his service among the Board of Honorary Councillors an opportunity for enlisting his coöperation in much that has concerned the growth of the Society during the time since 1889. In addition, he had been a trusted member of the Finance Committee of the Society during the time of his residence in New York City.

The formal mould of resolutions does not seem to fit a proper voicing of the spirit which pervades the Society at the death of one whom its members had grown to know so well, and particu-

The Council has appointed a committee to prepare such material as may be necessary, which may be used in opposition to legislation seeking to make the Metric System and its use compulsory in the United States. The Council has appointed as such committee Messrs. Coleman Sellers, John E. Sweet, Charles T. Porter, George M. Bond, and Coleman Sellers, Jr. There is also lying upon the table the proposition for the Council to appoint a committee to consider and report a satisfactory classification and index system in the field of engineering.

Through the kindness of Mr. D. N. Melvin, member of the Society, a linoleum for the approach to the Auditorium has been specially manufactured for the hallway, and presented to the Society. It embodies a design which includes the Society's emblem with its initials, and is a unique specimen of such work. Suitable recognition has been sent to Mr. Melvin and to the American Linoleum Manufacturing Co.

The Council has considered the invitation presented by the Engineering Association of the South to hold its meeting in May, 1897, in the city of Nashville, and the invitation extended by members of the Society to meet at that time in the city of Milwaukee, Wisconsin. It has seemed best for the Council to decide to meet in an Eastern city, and the invitation to meet in Nashville has therefore been politely declined, with thanks. The Council announces, therefore, that the spring meeting of 1897 will probably be in Hartford, Connecticut.

The Council would also report for record the deaths, since the last annual meeting, of the following persons:

D. K. Clark, January 22d; Nat. W. Pratt, March 10th; A. Plamondon, February 19th; Frank Cawley, April 6th; A. H. Smith, April 24th; W. W. Smith, July, 1896; J. F. Holloway, September 1; E. S. Cronise, September 19th; S. D. Locke, October, 1896; Jos. S. Ludlam; Levi K. Fuller, October 10th.

APPENDIX.

April 11, 1896.

To Senator Squire, of Washington, and to Hon. Francis Wilson, of New York, and to the Chairman of Committee on Naval Affairs.

Dear Sirs: The American Society of Mechanical Engineers has a membership of about eighteen hundred, embracing a large number of the most eminent engineers of the country, many of whom were in the naval service during the late war.

Its governing body, or Council, has had its attention called to bills now before

Congress, known as the Wilson-Squire bills, which have for their object and aim a reconstruction of the rules and regulations which govern the corps of engineers in the United States Navy. As American engineers we are deeply interested in the development of our new Navy, and are especially desirous that in its *personnel* it shall be the peer of any afloat, as it is in design, construction, and equipment. With a view of contributing to the passage of the bill referred to, to the extent of their influence, the following action was had at a meeting held in this city, April 8, 1896 :

***Whereas,* It is apparent that rules and regulations formulated years ago, when the steam engine on naval vessels was but an auxiliary to sails, are not only unsuited to present conditions (from which sails and sailors as such have utterly passed away, while the steam engine with enormously increased capacity has become the sole motive power), but are in their operation positively injurious and detrimental to the highest efficiency and usefulness of the navy ;**

***Therefore, be it resolved,* That the Council of the American Society of Mechanical Engineers heartily indorse any action which may be taken in Congress or elsewhere which, on the lines laid down in what are known as the Wilson-Squire bills, has for its aims the remodelling and readjustment of the rules and regulations which govern the duties and establish the status of the naval engineer, to the end that they may more nearly accord with the increased skill required of him, and the increased care and responsibility now resting upon him.**

On behalf of the Council,

JOHN FRITZ, *President.*

[Copy from the records.]

The interest of the individual members of the Society in the matter had been solicited by a circular whose purport is as follows:

To the Members of the American Society of Mechanical Engineers :

While it is not the province and certainly not the wish of the Council to influence members in matters not directly connected with the welfare of the Society, it has been deemed proper and wise to call your attention as citizens and engineers to the bills now before Congress known as the "Wilson-Squire Bills," Senate No. 735, House of Representatives No. 3618. These have for their object and aim a revision of the rules and regulations of the navy as they affect the authority and status of the engineers : first, by an increase of the number of the corps, which shall be in proportion to the increase of naval vessels ; second, the admission of graduates from civilian engineering schools to the corps ; third, the establishment of an engineering experimental station ; and, finally, the transfer to the Engineer Corps of certain engineering duties now in other hands.

As is doubtless known to you, there have been no important changes in these rules as they relate to engineers since the time when steam was introduced into the navy as a mere auxiliary or an aid to the sail. It is scarcely necessary to remind members of our profession of the great difference which exists between the naval vessels of to-day as compared with those of the time referred to, nor to explain how in so many ways the duties, cares, and responsibilities of those who are in charge of the immense and complicated machines which fill them have been enlarged, increased, and intensified.

It would be unpatriotic and unwise for any one to foster or encourage differ-

ences among naval officers which simply refer to precedence and rank, irrespective of responsibilities. It is, however, in the opinion of your Council, not only proper but the duty of every one, and especially so of the engineers of our country, by all proper means to bring their individual influence to bear upon those whose province it is to make the laws of the land, urging them so to amend the rules and regulations of the navy that they shall conform to existing conditions, and shall accord to the Engineer Corps a rank and a position which will correspond with the responsibilities now resting upon them, due to the great changes which have taken place in the construction and equipment of our new navy. Should the matter thus briefly referred to commend itself to your good judgment, you can greatly aid in bringing about this desired result by at once addressing a letter to the Senator from your State, and the Representative from your district, requesting their aid in passing the bills above referred to. In so doing you will not only confer a benefit upon our brother engineers in the navy, but you will contribute in bringing the profession of engineering into greater prominence the world over.

As this bill is likely to be called up at any time, prompt action only will be of service.

On behalf of the Council,
JOHN FRITZ, *President.*

F. R. HUTTON, *Secretary.*

The Council would also present for record the report of its tellers to count the ballots cast for members at the canvass made just previous to the Annual Meeting. The report is as follows:

REPORT OF THE TELLERS OF ELECTION.

The undersigned were appointed a committee of the Council to act as tellers (under Rule 13) to scrutinize and count the ballots cast for and against the candidates proposed for membership in the American Society of Mechanical Engineers, and seeking election before the Thirty-fourth Meeting, New York, 1896.

They have met upon the designated day, in the office of the Society, and have proceeded to discharge their duty. They would certify, for formal insertion in the records of the Society, to the election of the persons whose names appear on the appended list, to their respective grades.

There were 492 votes cast on the pink ballot, of which 17 were thrown out because of informalities (the members voting having neglected to indorse the sealed envelope).

CHAS. H. LORING,
JOHN C. KAFER, } *Tellers of Election.*
FRANK H. BALL,

ELECTED AS MEMBERS.

Ardell, Robert.
Clarke, C. M.
Davis, C. E.
Evans, H. O.
Felthousen, J. H.
Germann, J. G.
Gates, A. J.
Kenrick, A. E.
Manning, H. G.
Muir, J. J.
Noyes, Wm. S.
Parker, L. H.
Rix, E. A.
Robinson, H. S.
Rosing, Wm. H. V.
Stumpf, John.
Wallace, Jos. D.
Woodward, Dan. C.

ELECTED AS ASSOCIATES.

Forstall, W.
Loveland, J. W.
Williston, A. L.
Scott, Jas. B.

PROMOTED TO FULL MEMBERSHIP.

Case, T. N.
Lidgerwood, Wm. V.
Smith-Whaley, W. B.
Willis, E. J.

ELECTED AS JUNIOR MEMBERS.

Bailey, T. S.
Braine, B. G.
Child, E. T.
Craine, J. J.
Freed, G. F.
Gibson, J. E.
Lowell, J. W.
Monroe, W. S.
Reed, S. G.
Reid, E. S.
Schaeffer, L. C. T.
Sickles, E. C.
Vaux, Wm. S., Jr.

At the close of the Report of the Council, the second order of business was the Report of the Finance Committee, which was as follows:

ANNUAL REPORT OF THE FINANCE COMMITTEE OF THE AMERICAN SOCIETY OF MECHANICAL ENGINEERS, 1895–1896.

The Finance Committee of the American Society of Mechanical Engineers would respectfully report to the Council the following statements of the receipts and expenditures on behalf of the Society, under their direction during the year from November, 1895, to November, 1896.

ANNUAL REPORT.

Receipts.

Accounts.	Cash.	Bonds.	Total.
Initiation Fee	$2,494 50	....	$2,494 50
Current Dues	21,714 00	....	21,714 00
Past Dues	848 05	....	848 05
Advanced Dues	202 02	....	202 02
Sales of Publications	1,214 20	....	1,214 20
Binding	2 25	....	2 25
Badges	432 00	....	432 00
Carried forward	$26,907 02	....	$26,907 02

Accounts.	Cash.	Bonds.	Total.
Brought forward	$26,907 02	....	$26,907 02
Engraving	133 60	....	133 60
Life Membership	515 00	$200 00	715 00
Contingencies	74	....	74
Postage and Express	2 54	....	2 54
Interest on Investments	1,045 00	....	1,045 00
Office Expenses	7 96	....	7 96
Library	50 00	....	50 00
House Supplies and Furniture	6 67	....	6 67
Certificates	50	....	50
Total Receipts	$28,669 03	$200 00	$28,869 03
Cash on hand first of year	285 80	....	285 80
	$28,954 83	$200 00	$29,154 83

Disbursements.

General Printing and Stationery	$2,009 27
Reprints and Publications	8,109 46
Postage and Express	1,468 85
Salaries	6,394 57
Office Expenses	269 79
Engraving	754 15
Contingencies	57 37
Binding	1,486 80
Meetings	1,211 85
House Supplies and Furniture	848 88
Badges and Certificates	731 25
Travelling	225 00
Insurance and Safe Deposit	63 00
Rent, Interest, and Taxes	3,500 00
Investment Bonds received as above	200 00
Investment Bonds purchased	500 00
Library (Book Purchase, Binding, etc.)	807 22
Work of Committee	441 30
Cash on hand to balance	76 07
	$29,154 83

The receipts on account of Life Membership during this year were $715 * ; $515 of this amount being cash and $200 bonds of the Mechanical Engineers' Library Association, which were received as cash in payment for such Life Membership.

Of the issue of bonds in 1890 of the Mechanical Engineers' Library Association, which amounted to $32,000, the Council of

---

* One member, not a resident of the United States, has made a partial payment only towards his Life Membership taken near the end of the fiscal year; the transaction is unfinished.

the Society, as Trustees, held November 15, 1895, at the time of the last report of the Finance Committee, $20,000, and during the year 1895–96 the Council has acquired $700 additional bonds ($500 by purchase, $200 by surrender for a Life Membership), thus making the total of these bonds held by the Council at this date $21,600; adding to which the $200 of these bonds bought and held by the Mechanical Engineers' Library Association, makes a total of $21,800, and leaves $10,200 of them still outstanding in the hands of members.

At the end of the year 1894–95 there was an outstanding indebtedness against the Society of $4,192.85, which indebtedness had been carried since the year after the Columbian Congress at Chicago in the form of a running account with the Society's printer, and was due to the unusual expense incurred for publications during that year. The Finance Committee takes pleasure in announcing that this indebtedness has been entirely wiped out, and is included under the proper headings in the statement.

At the date of this report there remained outstanding uncollected accounts due the Society as follows:

129 members owe for dues, publications, etc.	$2,557 10
6 non-members owe for publications (all recent accounts)	23 85
Total amount uncollected	$2,580 95

Of the 129 members owing this $2,557.10, eighteen owe small amounts for publications only recently sent to them, and of the remaining 111 men whose accounts are open, letters have been received from sixty saying that they would either remit shortly, by a fixed date, or else for valid reasons asking for an extension of time to meet their indebtedness, which has been granted. This leaves only fifty-three persons who have not been heard from with respect to meeting the accounts against them for this year.

An indebtedness against the Society amounting to $885.30 remains at this date, part of which is chargeable to the expenses of the next fiscal year, and will be at once met from the dues of the year 1896–1897.

LIBRARY ASSOCIATION.

COPY OF THE ANNUAL REPORT OF THE TRUSTEES OF THE MECHANICAL ENGINEERS' LIBRARY ASSOCIATION, 1895–1896.

The summary of receipts and disbursements of the Trustees from November 19, 1895, to November 16, 1896, is appended.

Receipts.

Balance on hand first of year, 1895–96		$637 66
Receipts, Fellowship Fund	$274 00	
" Sinking Fund	463 00	
" Office Rent	3,825 00	
" Room Rent	1,227 09	
" Interest on Investment	25 00	
" Investment	200 00	
Contingencies	27 00	
Total Receipts	$5,641 09—	5,641 09
Total Cash		$6,278 75

Disbursements.

Interest on Mortgage		$1,402 50	
" Bonds		1,612 50	
Salaries		990 60	
Janitorial Supplies		471 94	
Fuel		131 00	
Lighting: Gas	$158 95	548 03	
Lighting: Electric Light	$389 08		
Equipment		245 20	
Laundry		243 74	
Binding		2 25	
Repairs		338 73	
Insurance and Safe Deposit		114 00	
Book Purchase		64 03	
Contingencies		62 10	
Stationery and Printing		3 75	
Total Disbursements		$6,230 37—	6,230 37
Cash on hand to balance			48 38
Total			$6,278 75

Assets.

House and lot, 12 W. 31st Street, New York City	$65,000 00	
Furniture and Equipment	5,000 00	
Books and MSS	10,600 00	
Bills Receivable (Office and Room Rent, uncollected)	286 42	
" " (Subscription to Fellowship Fund, uncollected)	24 00	
" " (Sinking Fund Subscription, uncollected)	10 00	
Second Mortgage held by Trustees as an Investment	200 00	
Total Assets	$81,120 42—	$81,120 42

Liabilities.

First Mortgage held by N. Y. A. of M.	$33,000 00	
Second Mortgage held by Members of the A. S. M. E.	10,200 00	
Second Mortgage Bonds held by the Council of the A. S. M. E. as an Investment	21,600 00	
Total Liabilities	$64,800 00—	64,800 00
Excess of Assets over Liabilities		$16,320 42

The President.—The next business is the report of the committee to consider and to report on Standard Methods for Testing Boilers.

Dr. Charles E. Emery.—This committee is simply prepared to report progress. After consultation with members present, it seems desirable to make a brief statement of the work which the committee is doing. The principal question which has arisen is the desirability of comparing the performances of boilers by efficiency; that is, if there be a certain number of thermal units in the coal as determined chemically or by burning it in an oxygen calorimeter, and a certain less number of thermal units be practically obtained by a boiler test, the relative economy may be expressed by the division of the first by the second; that is, the efficiency shows the proportion of the total calorific value of the fuel which is utilized in the boiler. The idea is so fascinating that some members of the Society consider there should be no other standard. On investigation, however, there are many difficulties in establishing such a standard. For instance, it is found that the calorific value derived either by computations based on the elementary composition of the coal or by directly burning a sample in oxygen has not, in all cases, proved to be directly proportional to the evaporation which can be practically derived from the coal. Again, the apparatus available for making tests is not so generally known as to insure positive identity of result when samples of the same coal are tested by different observers. Again, for commercial purposes the information sought is the cost of water evaporated into steam, stated in terms of the weight of a particular kind of coal available in the market, and the statement of efficiency does not convey this information.

There is still another point. If we compare the results of an evaporation test, either by the coal or by the combustible consumed, we naturally wish to make a comparison of efficiencies on the same basis. Since, however, the efficiency is the quotient arising from the division of the results of an evaporation test by those obtained by analysis or a calorimeter test, a little thought will show that when the refuse found for the evaporation test and for the analysis or calorimeter test is the same, as it should be, the efficiency per pound of coal will be the same as per pound of combustible whether the refuse be five per cent., twenty-five per cent., or any other percentage. On the other hand, the evaporation results will vary with the percentage of refuse. It is

Receipts.

Balance on hand first of year, 1895–96		$637 66
Receipts, Fellowship Fund	$274 00	
" Sinking Fund	463 00	
" Office Rent	3,825 00	
" Room Rent	1,227 09	
" Interest on Investment	25 00	
" Investment	200 00	
Contingencies	27 00	
Total Receipts	$5,641 09—	5,641 09
Total Cash		$6,278 75

Disbursements.

Interest on Mortgage		$1,402 50	
" Bonds		1,612 50	
Salaries		990 60	
Janitorial Supplies		471 94	
Fuel		131 00	
Lighting	Gas $158 95 Electric Light $389 08	548 03	
Equipment		245 20	
Laundry		243 74	
Binding		2 25	
Repairs		338 73	
Insurance and Safe Deposit		114 00	
Book Purchase		64 03	
Contingencies		62 10	
Stationery and Printing		3 75	
Total Disbursements		$6,230 37—	6,230 37
Cash on hand to balance			48 38
Total			$6,278 75

Assets.

House and lot, 12 W. 31st Street, New York City	$65,000 00	
Furniture and Equipment	5,000 00	
Books and MSS	10,600 00	
Bills Receivable (Office and Room Rent, uncollected)	286 42	
" " (Subscription to Fellowship Fund, uncollected)	24 00	
" " (Sinking Fund Subscription, uncollected)	10 00	
Second Mortgage held by Trustees as an Investment	200 00	
Total Assets	$81,120 42—	$81,120 42

Liabilities.

First Mortgage held by N. Y. A. of M.	$33,000 00	
Second Mortgage held by Members of the A. S. M. E.	10,200 00	
Second Mortgage Bonds held by the Council of the A. S. M. E. as an Investment	21,600 00	
Total Liabilities	$64,800 00—	64,800 00
Excess of Assets over Liabilities		$16,320 42

Our count therefore shows that the entire regular ticket was elected.

Respectfully,

Wm. T. Bonner,
Geo. I. Rockwood, } *Tellers of Election.*

The Secretary read a letter from Mr. Albert Ladd Colby, Secretary *pro tem.* of the Association of American Steel Manufacturers, reporting their action in the matter of the use of a decimal gauge for thickness. The letter was as follows:

The Bethlehem Iron Company,
South Bethlehem, Pa., *November* 13 1896.

Prof. F. R. Hutton,
Secretary American Society of Mechanical Engineers,
12 West Thirty-first, New York City.

Dear Sir: At the meeting of the Association of American Steel Manufacturers held in New York on October 28, 1896, the following resolutions were passed:

1. *Resolved,* That we, the Association of American Steel Manufacturers, indorse the Decimal System * as the proper standard for measuring all materials.

2. *Resolved,* That the Secretary be requested to forward a complete copy of the Committee's report, together with a copy of these resolutions, to the Secretaries of the American Institute of Mining Engineers, the American Society of Civil Engineers, the American Society of Mechanical Engineers, and the American Railway Master Mechanics' Association, as an evidence of the appreciation of the work accomplished by these societies towards the establishment of the Decimal System of Gauging, and as a proof of the hearty coöperation of this Association in this movement.

In the absence of the Secretary, the writer was made Secretary *pro tem.*, and encloses a copy of the Committee's report on Gauges in accordance with the above resolutions. As an evidence that this indorsement of the Decimal System of Gauging carries considerable weight, the following list of members of the Association is quoted:

The Bethlehem Iron Co.,
Cambria Iron Co.,
Carbon Steel Co.,
The Carnegie Steel Co., Ltd.,
Catasauqua Mfg. Co.,
Central Iron Works,
Cleveland Rolling Mill Co.,
Colorado Fuel & Iron Co.,
Glasgow Iron Co.,
Illinois Steel Co.,
Jones & Laughlins, Ltd.,
Lukens Iron & Steel Co.,
Otis Steel Co., Ltd.,
Pacific Rolling Mill Co.,
Paxton Rolling Mills,
Park Bros. & Co.,
Passaic Rolling Mill Co.,
Pennsylvania Steel Co.,
Pottstown Iron Co.,
Pottsville Iron & Steel Co.,
Reading Rolling Mill Co.,
Schoenberger Steel Co.,
Spang Steel & Iron Co.,
Worth Brothers.

Please acknowledge the receipt of this communication, and also bring the reso-

---

* This refers to the system of thickness gauging recommended by a committee of the A. S. M. E., in which the "number" of the gauge was that giving the number of thousandths of an inch measured by the plate.

therefore difficult to understand what the efficiency means in such cases, and evidently it cannot be directly compared with the results obtained by evaporation tests. This may explain why it has been found in certain cases that lump coal has a low efficiency and a high evaporation compared with slack coal from the same source. It is impossible here to go fully into details, but you will see that very important questions have arisen. Such questions are being discussed by correspondence addressed to the chairman, who in turn sends copies to the other members of the committee for examination and such further discussion as desired. The committee is working earnestly to settle the matter, and as soon as an agreement can be reached by its members a report will be promptly formulated and forwarded to the Society.

The next business in order was the report of the Society's professional Committee on Standard Methods of Test, which was presented by Mr. Henning, as follows:

Mr. Gus C. Henning.—The committee has at this time only a report of progress to make. Probably at the next meeting of the Society we may be able to present a conclusion embodying the results of the tests on cast iron. The committee has been hampered in its work by the illness of two of its members.

The Secretary read the report of the tellers appointed at the meeting last evening to count the ballot for officers. They reported as follows:

Your committee appointed as tellers of election to count ballots for officers of the American Society of Mechanical Engineers for the year 1896–97 begs to submit the following report:

Total ballots cast	583
Ballots thrown out on account of irregularities	88
Total ballots counted	495

Of the latter number there were cast—

For Mr. Worcester R. Warner, for President	494
" " E. S. Cramp, for Vice-President	494
" " S. T. Wellman, for Vice-President	503
" " W. F. Durfee, for Vice-President	487
" " Wm. H. Wiley, for Treasurer	494
" " H. S. Haines, for Manager	491
" " Gus C. Henning, for Manager	489
" " A. Wells Robinson, for Manager	493
Scattering	1

o'clock, with Prof. John E. Sweet in the chair. It was opened by a short memorial paper by Prof. F. R. Hutton, and afterwards those who had expressed their wish to take part spoke as the occasion moved them, or as their feelings were stirred by the remarks of others. Those who contributed to the subject were: Messrs. John Stanton, John Fritz, R. W. Hunt, W. R. Warner, J. H. Snow, Hosea Webster, S. T. Wellman, J. S. Lane, C. E. Emery, John Platt, W. S. Rogers, E. H. Mumford, J. D. Cox, H. G. Torrey, J. M. Cremer, J. T. Hawkins, J. B. Edson, Allan Stirling, and John E. Sweet.

The extra session was attended by a considerable number, and was marked by sincerity and earnest feeling.

THIRD SESSION. THURSDAY, DECEMBER 3D.

The session was called to order by President Fritz at ten A.M. The papers of the morning were by Messrs. F. R. Jones and A. L. Goddard, entitled "Experimental Investigation of the Cutting of Bevel Gears with Rotary Cutters"; by Mr. J. A. Laird, entitled "The Calibration of a Worthington Water Meter"; by Mr. Francis Schumann, entitled "Contraction and Deflection of Iron Castings"; by Mr. John W. Seaver, on "A 200-foot Gantry Crane"; by J. V. Shaefer, on the "Washing of Bituminous Coal by the Luhrig Process"; and by Prof. C. H. Benjamin, on "Friction H. P. in Factories."

The paper on castings was discussed by Messrs. Gobeille, Henning, Richards, Kent, Hawkins, Brashear, Fritz, Webster, Johnson. The paper by Mr. Seaver was discussed by Messrs. Clements, Schumann, Oberlin Smith, Gobeille, Henning, and that by Mr. Benjamin by Messrs. Manning, Curtis, Rockwood, Oberlin Smith, Pearson, Stetson, Goetze, Greene, Fry, Bardwell, and Johnson.

The subject of shrinkage and other peculiarities of cast iron was deemed of so important a character that it was the sense of those present that it would be desirable that the subject should be continued by the presentation of Mr. Schumann's paper a second time, or that another paper should be presented which should serve as a starting point at the next meeting.

FOURTH SESSION. THURSDAY EVENING.

President Fritz called the meeting to order at 8.30 P.M. The three papers of the evening were to be those by Mr. F. A. Halsey, on "Some Special Forms of Mechanical Computers"; by Mr. M. P. Wood, on "Rustless Coatings for Iron and Steel"; and by Mr. H. M. Lane, entitled "A Method of Shop Accounting to Determine Cost."

Mr. Wood's paper was discussed by Messrs. Sabin, Spillsbury, Boyer, Christie, Nichols, Kent, Henning, Lane, Torrance, and Emery. That of Mr. Lane was discussed by Mr. Rogers, and the suggestion was offered that its importance was sufficient to warrant its being continued with a view to further discussion at a later meeting, as in the case of the paper by Mr. Schumann. The evening ended by a presentation by Mr. H. de B. Parsons of the report of the Society's Committee on the Testing of Fire-proofing Materials. This was illustrated by lantern slides, and was made very full and complete.

FIFTH SESSION. FRIDAY MORNING, DECEMBER 4TH.

The papers of the session were by Mr. W. W. Christie, on the "Efficiency of the Boiler Grate"; by Mr. R. S. Hale, entitled "Efficiency of Boiler Heating Surface"; by Prof. W. F. M. Goss, entitled "Paper Friction Wheels"; by Frank H. Ball, entitled "Steam Engine Governors"; by George W. Colles, Jr., entitled "Metric *vs.* the Duodecimal System"; and by Leonard Waldo, entitled "Aluminum Bronze Seamless Tubing."

The paper by Mr. Christie was discussed by Messrs. Curtis, Kent, and Le Van. That by Mr. Hale was discussed by Messrs. Rockwood, Clinton, Kent, Pearson, Willis, Le Van, Cary, and Platt. That by Mr. Ball was discussed by Messrs. Halsey and Richards. That by Mr. Colles by Messrs. Kent, Waldo, Fairbanks, Willis, Rohrer, Rockwood, Roberts, Henning, Schumann, and Sweet. That by Dr. Waldo was discussed only with questions from Messrs. Cary and Walworth.

The following letter was read, presenting to the Society a model of one of the earliest Dudgeon hydraulic jacks. The jack and a cut showing it in section accompanied the letter.

NEW YORK, *December* 3, 1896.

THE PRESIDENT AND MEMBERS OF THE AMERICAN SOCIETY OF MECHANICAL ENGINEERS:

It affords me pleasure to place in the custody of this Society the first hydraulic jack which was ever built, so far as known, together with a sectional view printing block; and, in accordance with request as to its history, I would say that the original designer of it, Mr. R. Dudgeon, was, in about 1850, a lounger in the drug-store of my stepfather, Mr. E. Lyon, and while there expressed the opinion that he could get up, as he called it, a hydraulic press for lifting stone. Explaining his idea to Mr. Lyon, he was set at work by him to develop the idea, and if successful the tool was to be patented in joint ownership. This patent was taken out in 1851. I at one time heard a rumor that there were two of these jacks made at the same time, and that its duplicate was burned in the Crystal Palace fire, but I cannot at this date obtain any verification of the story. It will be observed that this tool is made from common gas-pipe, and has an independent piston-rod for lowering. To one acquainted with the jack of the present time, the main principles will be seen to have been covered in this original invention. The block, it will also be observed, was evidently made before the copper-covered electrotypes were in use. There are in this jack, however, two small interior pieces at the present time which were not in the original. The original pieces were lost in our shop about five years ago by my partner, who cared nothing in particular about the tool. These have been replaced by duplicates.

If at any future time it is desired by the Society to place their historical articles in the keeping of other organizations, permission is given for them to do so. Yours,

THE WATSON-STILLMAN CO.,
F. H. STILLMAN, *Proprietor.*

At the close of the reading, Mr. Henning moved that the Society extend to Mr. Stillman a vote of thanks for his presentation of a matter of historical interest such as this to the Society. The motion, being seconded, was carried unanimously. There being no new business presented, and the hour of adjournment having arrived, the President spoke of his desire to thank the members for the confidence which they had shown in him, and for the indulgence which had been accorded him in all his contact with the official duties of his term.

It was announced that the spring meeting of 1897 was to be expected in the city of Hartford at such time as might be found convenient, and on motion the convention adjourned.

Following the usual custom, the afternoons of the days allotted for the annual meeting were left without assignment, for the members to be permitted to use the afternoon in the furtherance of their own business and pleasure. Several small parties were made up, pursuant to special invitation, to visit the power-houses of the Electric Light and Compressed Air Street Railway systems, and other points of general or miscellaneous interest.

On the evening of Wednesday a public reception by the New York members, for the entertainment of their visiting guests, was convened at Sherry's, Thirty-seventh Street and Fifth Avenue, and was very largely attended. The retiring and incoming President received the members, and following the reception, dancing and general social opportunity filled the evening after supper.

DCC.*

REPORT OF PROGRESS OF THE COMMITTEE ON FIREPROOFING TESTS.

NOTE.—The following pages are the text of a Report of Progress made by a joint committee (upon which the American Society of Mechanical Engineers is officially represented) to the several bodies which created these committees. It is not to be considered as final in any sense, but is given at a regular meeting of the Society with a view not only for record, and to make the investigation accessible to members, but also, and most of all, to elicit in discussion and by contributed comment the criticism of engineers upon the work thus far done, and suggestions for future work.

H. DE B. PARSONS, } ***Representatives of the American***
THOMAS F. ROWLAND, Jr., } ***Society of Mechanical Engineers.***

BULLETIN NO. 2.

THE COMMITTEE ON FIREPROOFING TESTS.

ROOM 104, 22 WILLIAM STREET,
NEW YORK, *July* 27, 1896.

BULLETIN NO. 2.

TO THE TARIFF ASSOCIATION OF NEW YORK, THE ARCHITECTURAL LEAGUE OF NEW YORK, AND THE AMERICAN SOCIETY OF MECHANICAL ENGINEERS.

Gentlemen:—Your joint committee takes pleasure in submitting to you a report of work done to date. As you will remember, we, the undersigned, were appointed a joint committee to investigate and test methods of fireproofing structural metal in buildings, and to obtain data for standard specifications.

Your committee, after having effected its own organization, determined to add to its numbers by the creation of an advisory board. This step was taken for the purpose of more widely increasing the interest taken in the experiments, and also to

---

* Presented at the New York meeting (December, 1896) of the American Society of Mechanical Engineers, and forming part of Volume XVIII. of the *Transactions.*

that he could get up, as he called it, a hydraulic press for lifting stone. Explaining his idea to Mr. Lyon, he was set at work by him to develop the idea, and if successful the tool was to be patented in joint ownership. This patent was taken out in 1851. I at one time heard a rumor that there were two of these jacks made at the same time, and that its duplicate was burned in the Crystal Palace fire, but I cannot at this date obtain any verification of the story. It will be observed that this tool is made from common gas-pipe, and has an independent piston-rod for lowering. To one acquainted with the jack of the present time, the main principles will be seen to have been covered in this original invention. The block, it will also be observed, was evidently made before the copper-covered electrotypes were in use. There are in this jack, however, two small interior pieces at the present time which were not in the original. The original pieces were lost in our shop about five years ago by my partner, who cared nothing in particular about the tool. These have been replaced by duplicates.

If at any future time it is desired by the Society to place their historical articles in the keeping of other organizations, permission is given for them to do so.

Yours,
THE WATSON-STILLMAN CO.,
F. H. STILLMAN, *Proprietor.*

At the close of the reading, Mr. Henning moved that the Society extend to Mr. Stillman a vote of thanks for his presentation of a matter of historical interest such as this to the Society. The motion, being seconded, was carried unanimously. There being no new business presented, and the hour of adjournment having arrived, the President spoke of his desire to thank the members for the confidence which they had shown in him, and for the indulgence which had been accorded him in all his contact with the official duties of his term.

It was announced that the spring meeting of 1897 was to be expected in the city of Hartford at such time as might be found convenient, and on motion the convention adjourned.

Following the usual custom, the afternoons of the days allotted for the annual meeting were left without assignment, for the members to be permitted to use the afternoon in the furtherance of their own business and pleasure. Several small parties were made up, pursuant to special invitation, to visit the power-houses of the Electric Light and Compressed Air Street Railway systems, and other points of general or miscellaneous interest.

On the evening of Wednesday a public reception by the New York members, for the entertainment of their visiting guests, was convened at Sherry's, Thirty-seventh Street and Fifth Avenue, and was very largely attended. The retiring and incoming President received the members, and following the reception, dancing and general social opportunity filled the evening after supper.

prevent, as far as possible, the impression that the work was of a sectional or local character. The names of the gentlemen who accepted invitations to serve on this advisory board are as follows:

Edward Atkinson, President Boston Manufacturers' Mutual Fire Insurance Co.; Osborne Howes, Secretary Boston Board of Fire Underwriters; Charles A. Hexamer, Secretary Philadelphia Fire Underwriters' Association; H. H. Glidden, Manager Chicago Fire Underwriters' Association; W. Martin Aiken, Supervising Architect United States Treasury Department, Representative Illinois Chapter American Institute of Architects; Stevenson Constable, Superintendent of Buildings, New York; George B. Post, New York Chapter American Institute of Architects; F. H. Kindl, Structural Engineer Carnegie Steel Co.; John R. Freeman, Chief Inspection Department, Factory Mutual Insurance Cos.; Henry Morton, President Stevens' Institute of Technology; C. J. H. Woodbury, Member American Society Civil Engineers; H. B. Dwight, Dwight Survey and Protection Bureau, New York; F. C. Moore, Delegate New York Board of Fire Underwriters to Board of Examiners of Department of Buildings; William A. Wahl, Secretary Franklin Institute, Philadelphia; John T. Williams.

The committee also wishes to take this opportunity of publicly thanking the parties mentioned below for their offers of assistance, namely:

The Continental Iron Works, for permission to use part of their yard, and for numerous courtesies which have been extended to the committee from time to time.

The Carnegie Steel Co. (Limited), for their offer to furnish all the structural steel that your committee may need.

Messrs. J. B. and J. M. Cornell, for their offer to furnish the cast-iron columns for which your committee may ask.

Messrs. Sinclair & Babsen, for their donation of seventy-five barrels of Alsen cement.

The Lorillard Brick Works Co., through Mr. Henry M. Keasbey, for 54,000 common bricks.

Mr. Henry A. Maurer, for his donation of 14,000 fire-bricks and fourteen barrels of fire-clay.

During the winter just past, your committee erected a testing plant, as shown in the accompanying photograph. The gas producer in the background is 9 feet in diameter by 12 feet in height, and is equipped with a hopper-valve on top. Gas is generated by means of steam from the boiler, as shown, and carried into the furnaces through pipes, as clearly indicated in the photograph (Fig. 1). The foundation shown on the left is ready for the erection upon it of a furnace for testing beams and floors. Its dimensions are: length 27 feet, width 12 feet, but it can be arranged to take larger beams if so desired. The furnace shown on the right is for testing columns, and is 14 feet square, outside measurement.

The arched roof is made of fire-brick, and is independent of the side walls, being supported by outside corner posts. The walls are of common brick, but can easily be changed so that experiments can be made on other materials. One side wall and the end wall with the door are 12½ inches in thickness; the rear wall is 8½ inches, and the fourth wall is 4 inches inside, 2 inches air space, and 8½ inches outside, making a total thickness of 14½ inches.

The floor is covered with fire-brick, with openings left for the branch gas pipes, and air spaces to support the combustion. These branch gas pipes are 4 inches in diameter, capped with tuyères reduced to 2 inches. In order to increase the temperature when desired, a barrel of naphtha is connected by means of a small pipe, and blown into the gas pipe at the Y-branch by means of a steam jet.

The column is placed in compression by means of a hydraulic ram underneath, resting on three 24-inch I-beams, the same as those across the top of the furnace shown in the photograph. In order to keep the entire length of the column within the furnace, filler blocks of cast iron are placed between the ends of the column and these I-beams. The hydraulic ram is 12 inches in diameter, and the water pressure can be carried to 2,500 pounds per square inch.

The temperature is measured by means of a Uehling & Steinbart pyrometer. As this pyrometer is in commercial use, and has been thoroughly tested and described in various scientific journals, it is not necessary to enter here into a detailed description.

The money to carry out this work has been advanced by various parties, and, together with the committee's disbursements, is shown in the accompanying treasurer's report.

TREASURER'S REPORT.

COMMITTEE ON FIREPROOFING TESTS, *July* 22, 1896.

SUBSCRIPTIONS RECEIVED.			
Boston Board of Fire Underwriters	$400 00		
Associated Factory Mutual Insurance Companies of New England	200 00		
E. H. Kendall	25 00		
Carrere & Hastings	50 00		
R. Magnicke	50 00		
McKim, Mead & White	100 00		
Sooysmith & Co	100 00		
R. H. Robertson	50 00		
George B. Post	100 00		
J. G. Howard	5 00		
The Tariff Association of New York	500 00		
Bruce Price	100 00		
Lamb & Rich	25 00		
Clinton & Russell	100 00		
American Sugar Refining Co	100 00		
Philadelphia Fire Underwriters' Association	400 00		
Continental Ins. Co	50 00		
		$2,355 00	
SUBSCRIPTIONS RECEIVABLE.			
The Tariff Association	500 00		
Associated Factory Mutual Insurance Companies of New England	200 00		
		700 00	
		$3,055 00	
Cash on hand		18 62	
Deficit		29 68	
			$3,103 30
EXPENDITURES.			
R. A. Bigelow, Printing, etc	$4 25		
Electro Light Engraving Co	15 00		
Continental Iron Works, Furnace, etc	1,813 12		
W. H. Sturgis, Sand	19 50		
John T. Woodruff, Broken Stone	68 00		
William C. Siegert, Stationery	11 00		
Berton & Nichell, Setting fire-brick lining	99 63		
Thomas F. Rowland, jr., for mason's wages paid	275 88		
Uehling, Steinbart & Co., two months' rent of pyrometer	30 00		
		$2,336 38	
LIABILITIES.			
The Continental Iron Works, Labor, etc., on furnace and at tests		766 92	
			$3,103 30

Respectfully submitted,

G. L. Heins, *Treasurer.*

Your committee decided that it would be best to make the tests according to the following programme :

First.—That a series of tests be made on steel and on cast-iron columns, without any fire protection whatever. These tests then to be taken as a basis of comparison with those that were to follow.

Second.—That a series of tests be made with similar steel and cast-iron columns, protected with different materials and in different manner.

Third.—That a series of tests be made on unprotected beams and girders.

Fourth.—That a series of tests be made on protected beams and girders.

It has also been proposed that each series be divided for test both with and without water.

Your committee has communicated with many manufacturers of fireproofing materials, and has been informed that these manufacturers will submit their materials for purposes of tests.

RESULTS.

The result of this series of tests is shown in the accompanying diagram (Fig. 15), where the solid line represents the temperature and the dotted line the load on the column.

Test No. 1 was made on a steel column, when the temperature was raised rapidly. Test No. 3 was made on a cast-iron column under similar conditions. Both columns began to fail as soon as they showed "red."

Test No. 2 was made on a steel column, when the temperature was raised more slowly than in the other tests just described, and Test No 4 was made on a cast-iron column under similar conditions. Both these columns failed when they began to show "red," although the time was longer than in Tests 1 and 3.

Test No. 5 was made on a cast-iron column, a jet of water being thrown upon it through a ¾-inch nozzle. The column was first heated to 675 degrees and then quenched with water without injury. The heat was then slowly raised again to 775 degrees, and the column again quenched with water. The heat was then raised slowly to a temperature of 1075 degrees, and the column, which then showed a "dull redness," was again quenched with water. The heat was then raised again to 1300 degrees, and the column, which now showed a "bright red," was again quenched

with water. The column was beginning to yield by bending just before the last application of the water. The column was

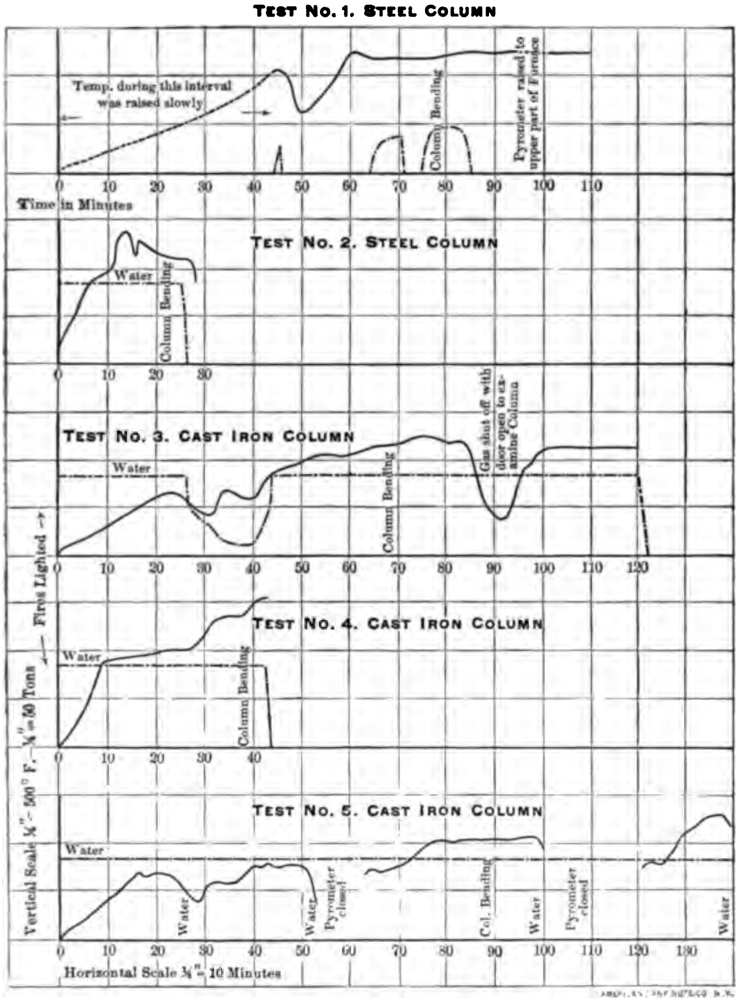

FIG. 15.

apparently unaffected by water, although it failed by bending under the load, the same as in cases 3 and 4.

COLUMN TEST NO. 1.

May 19, 1896.—Fire test without water. Steel column.

The walls of the furnace were of common brick, as described

FIG. 2.

TEST No. 1.

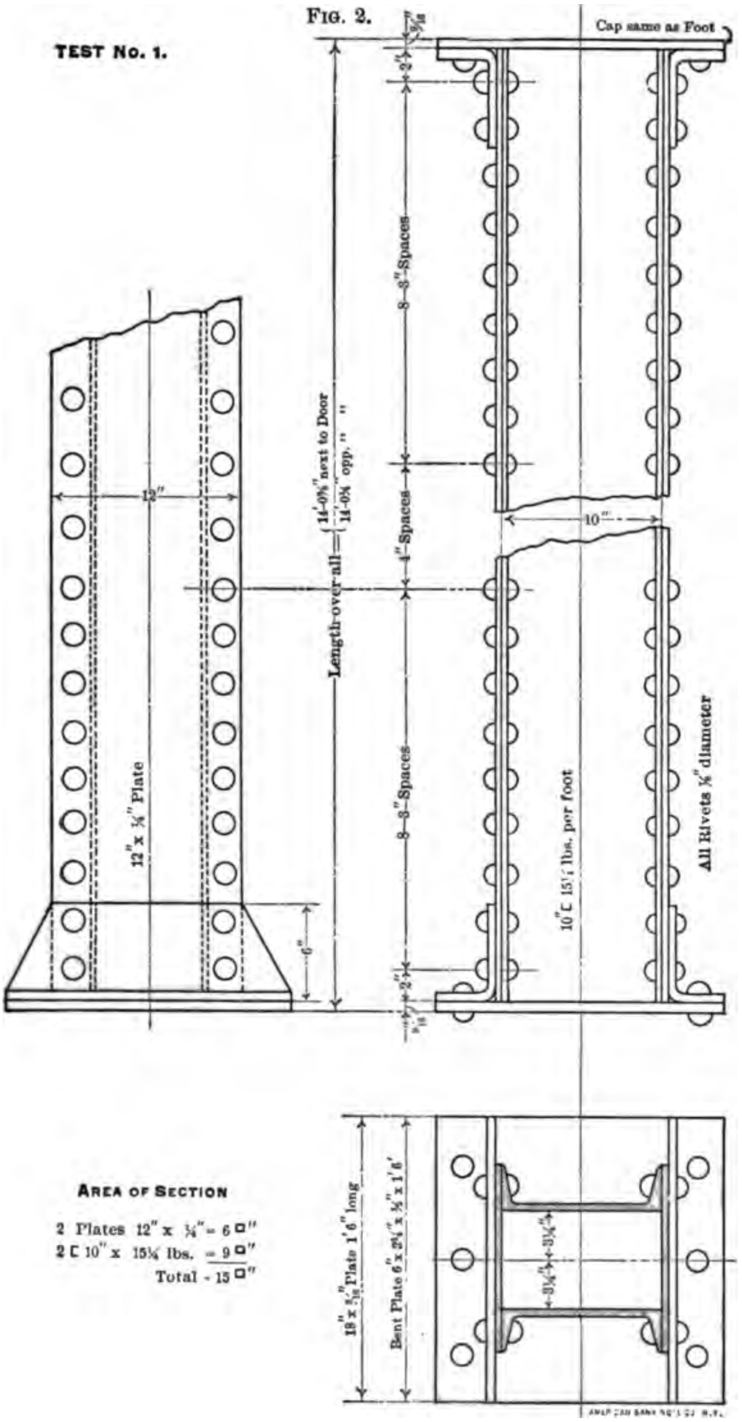

AREA OF SECTION

2 Plates 12" x ¼" = 6 □"
2 [10" x 15¼ lbs. = 9 □"
Total = 15 □"

with water. The column was beginning to yield by bending just before the last application of the water. The column was apparently unaffected by water, although it failed by bending under the load, the same as in cases 3 and 4.

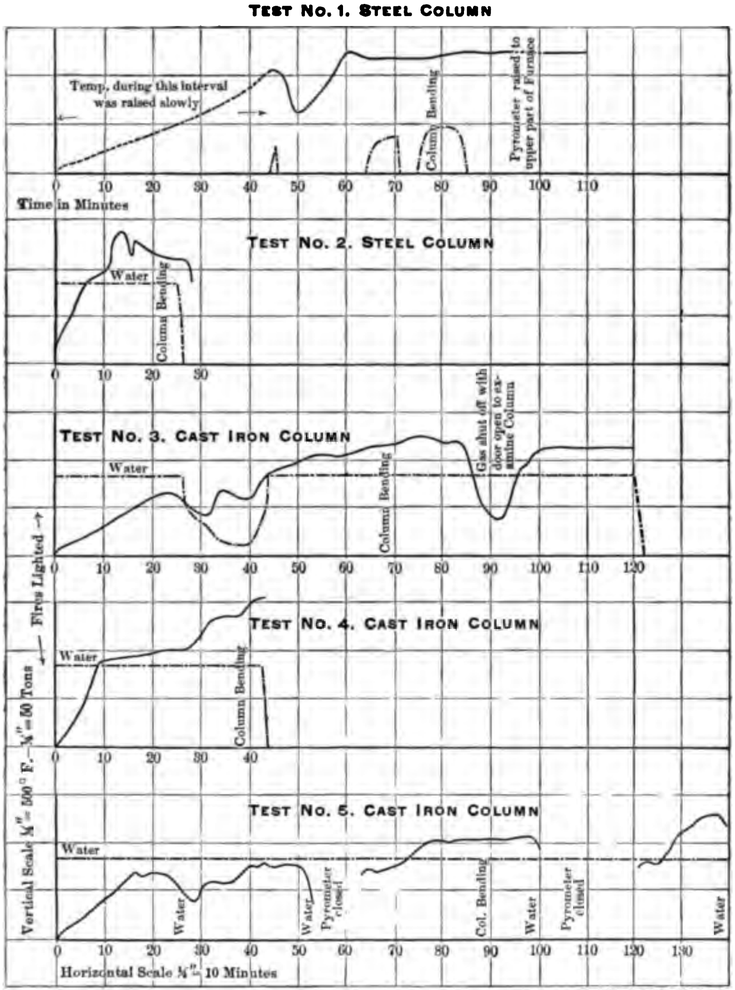

FIG. 15.

COLUMN TEST NO. 1.

May 19, 1896.—Fire test without water. Steel column.

The walls of the furnace were of common brick, as described

TEST No. 2.

FIG. 6.

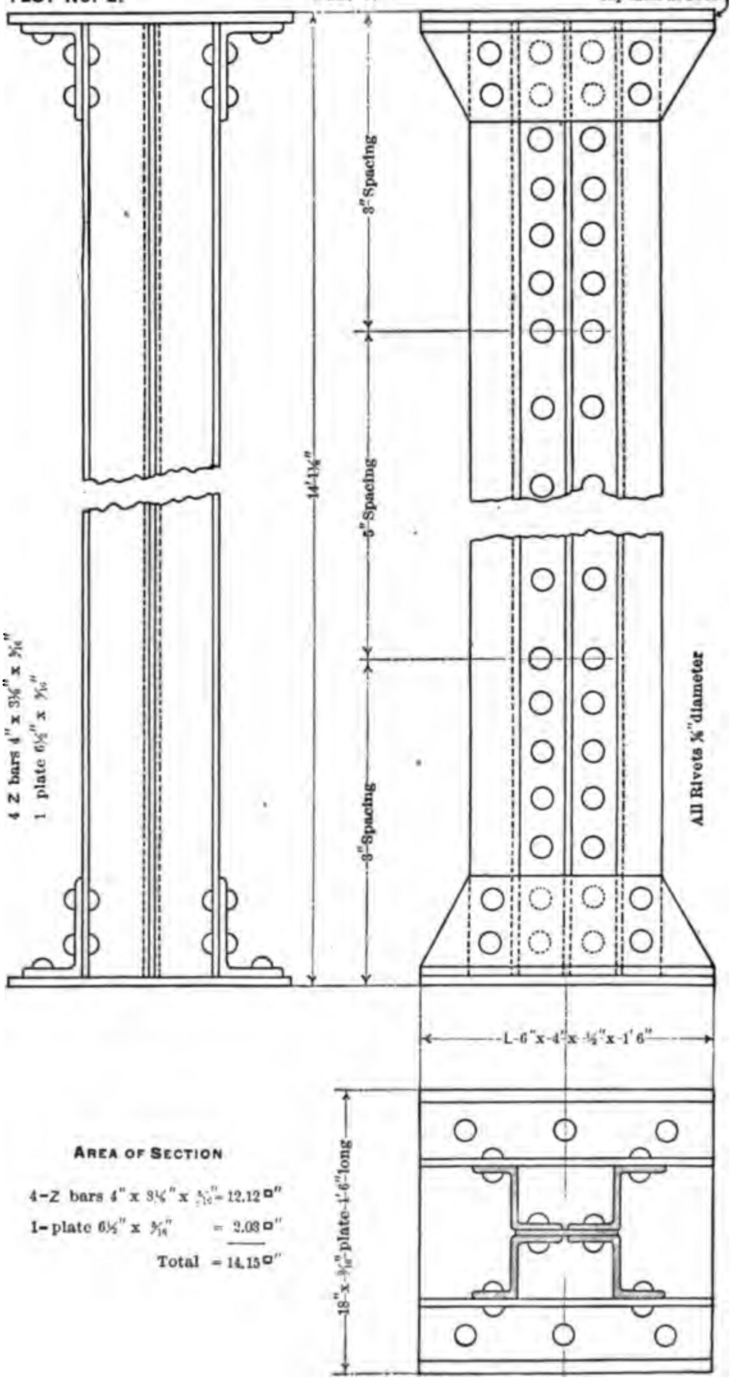

AREA OF SECTION

4-Z bars 4" x 3⅛" x 5/16"	= 12.12 □"
1-plate 6½" x 5/16"	= 2.03 □"
Total	= 14.15 □"

AMERICAN BANK NOTE CO. N.Y.

on page 26, and the door was closed with a double thickness of sheet iron, which made the opening practically tight. The column was a Carnegie Steel Box Channel of the dimensions as shown in Fig. 2, and was unprotected.

The weather was clear and warm, with only a slight breeze from the west. Temperature of air, 80 degrees Fahr. in the shade. The gas producer was fired the day before, with valve closed against furnace. The packing in the hydraulic cylinder leaked, and a fitting of the pipe gave out as test started. These causes delayed the use of the water pressure.

LOG OF TRIAL.

Time. H. M.	Pyrometer. Degrees Fahr.	Hydraulic Pressure. Total Load Tons.	Remarks.
10.35	.. ..	.....	Wood fire lit.
10.45	.....	.....	Gas turned into furnace.
11.02	.....	......	Furnace door closed.
11.03	.....	.....	Naphtha valve slightly open.
11.18	.....	.....	Pyrometer put in furnace through lower hole, 2½ feet above the furnace floor, with point 12 inches from column.
11.19	1,025	.....	
11.20	1,050	.....	Pressure on column. Light load. Pyrometer point 24 inches from column.
11.25	600	.....	Raking gas-producer ; gas shut.
11.28	....	.....	Gas turned on again.
11.33	1,025	.....	No naphtha.
11.36	1,225	......	Half faucet of naphtha.
11.38	1,200	.....	
11.40	1,175	14.13	Water pressure on.
11.41	1,180	28.26	Quarter faucet of naphtha.
11.46	1,175	.....	Pressure off, water valve repacked.
11.50	1,175	.....	Closed all air openings. Water pressure on.
11.55	1,200	48.06	Column began to show "red."
11.56	1,210	.....	Column began to yield.
11.59	1,225	42.41	Hydraulic pressure falling fast.
12.10	1,280	.....	Pyrometer shut off. Pyrometer raised to upper hole, 8½ feet above floor, and point 3 feet from column.
12.16	1,230	.....	
12.25	1,250	.....	Gas shut off.

The column would have failed sooner if the working load of 80 tons could have been used.

The result of the test is shown in the flashlight photograph (Fig. 3) taken of the column before it was disturbed. After the column was removed from the furnace, photograph (Fig. 4) was taken. The brick walls cracked, as shown in photograph (Fig. 5), the greatest damage taking place where one wall was

TEST No. 2. FIG. 6.

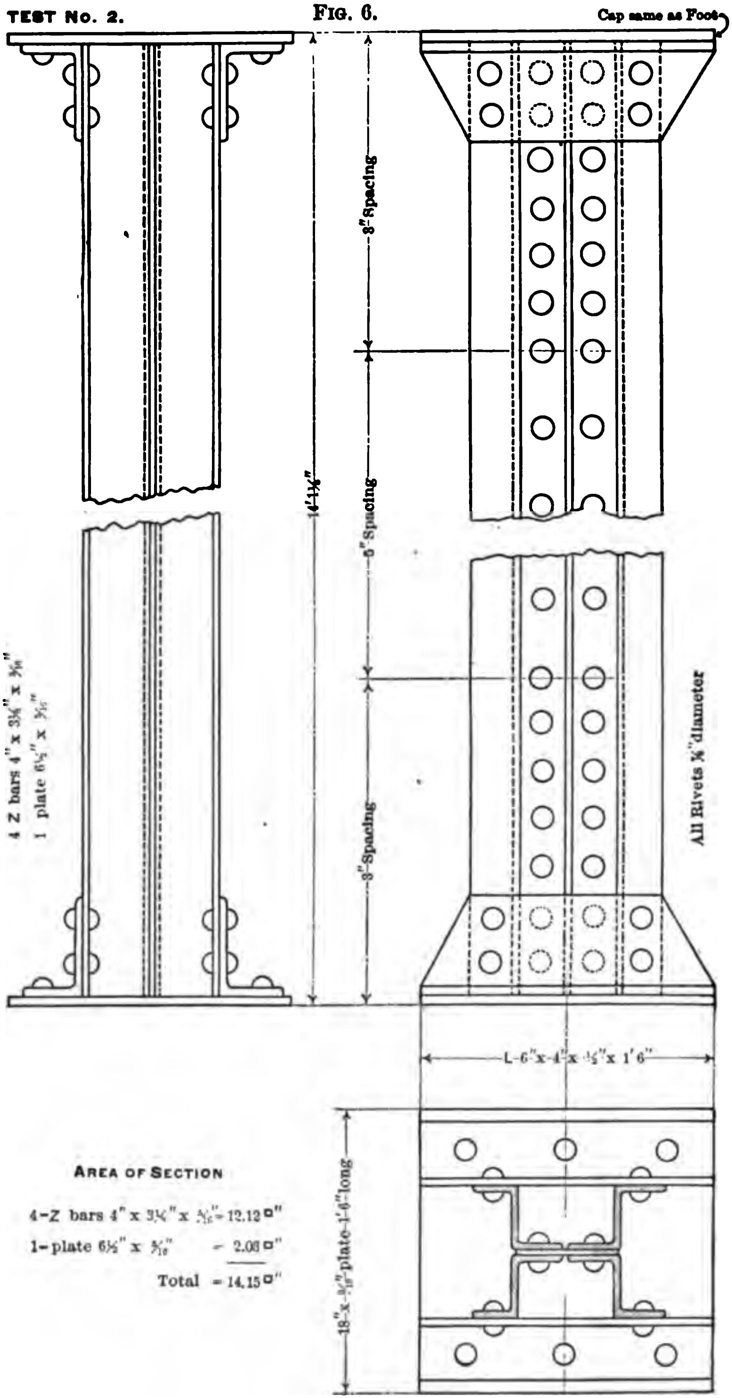

AREA OF SECTION

4-Z bars 4" x 3¼" x 5/16" = 12.12 □"
1-plate 6½" x 5/16" = 2.03 □"
Total = 14.15 □"

AMERICAN BANK NOTE CO. N.Y.

bonded into the next, and the cracks at these places extended through the bricks. Along the horizontal joints the walls cracked most on the bond courses. All the walls were hot, the eight-inch wall being too hot to hold the hand in contact with it.

Strength by Gordon's formula:

Breaking strength per sq. in................45,630 lbs.
Area of cross section........................15 sq. in.
Breaking load, 15 x 45,630..................684,450 lbs. 342 tons.

Actual greatest load, cold, 141.4 tons, with no change of form.

COLUMN TEST NO. 2.

May 27, 1896.—Fire test without water. Steel column. Furnace same as Test No. 1.

The column was a Carnegie steel Z-bar, as shown in Fig. 6 and in the photograph, and was uncovered. The weather was clear and warm, with a moderate breeze from the northwest. Temperature of air, 80 degrees in shade.

LOG OF TRIAL.

Time. H. M.	Pyrometer. Degrees Fahr.	Hydraulic Pressure. Total Load Tons.	REMARKS.
2.23	80	....	Pyrometer point 3 feet from column.
2.24	200	84.8	Wood fire lit.
2.30	650	"	Gas turned on.
2.33	.....	"	Door closed. Full cock of naphtha.
2.35	1,000	"	One-quarter cock of naphtha.
2.36	1,300	"	
2.37	1,350	"	
2.38	1,375	"	Naphtha closed.
2.39	1,300	"	
2.40	1,125	"	One-eighth cock of naphtha.
2.40½	1,300	"	
2.41	1,325	"	
2.42	1,250	"	
2.43	1,200	"	
2.44	1,175	"	Naphtha cock closed to "dropping."
2.45	.....	"	Pyrometer moved to 2 feet from column as flame touched point.
2.46	1,125	"	Column began to yield.
2.47	1,125	"	Column yielding fast.
2.49	1,100	"	Impossible to maintain hyd. pressure.
2.51	1,100	"	Pump and gas stopped.
2.52	900	"	Pyrometer closed.

The result of this test is shown in photographs (Figs. 7 and 8).

Strength by Gordon's formula:

Breaking strength per sq. in............... 42,820 lbs.
Area of cross section.......................14.15 sq. in.
Breaking load. 14.15 x 42,820........... ...605,900 lbs. 303 tons.

TEST No. 3. FIG. 9.

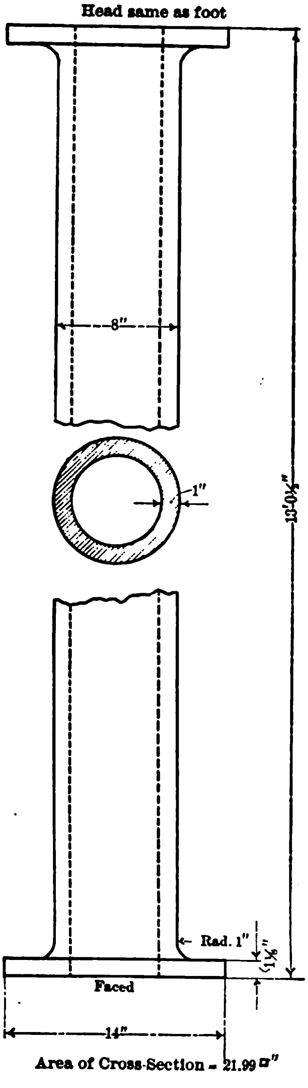

COLUMN TEST NO. 3.

June 30, 1896.—Fire test without water. Cast-iron column. Furnace same as Tests 1 and 2.

The column was a cast-iron, hollow, round column, with flanges faced on both ends, as shown in the photographs and in Fig. 9, and was uncovered. It was cast horizontally, with a dry sand core, by the Cornell Iron Works, New York.

The weather was clear and warm, with a slight breeze from southwest. Temperature of air, 75 degrees Fahr.

LOG OF TRIAL.

Time. H. M.	Pyrometer. Degrees Fahr.	Hydraulic Pressure. Total Load Tons.	REMARKS.
2.32	.....	14.1	Wood fire lit.
2 45	.....	84.8	Gas lit. Door being closed.
2.50	....	"	Pyrometer in place, 18 in. from column.
2 51	575	"	
2.54	625	"	
2.57	625	"	Gas shut off to poke producer.
2.59	500	"	
3.00	475	56.5	Removed some loose bricks that interfered with tuyères.
3.04	425	28.2	
3.05	450	....	Gas turned on, door closed.
3.06	650	15.5	
3.08	667	....	Air openings closed.
3 12	600	11.8	Door down to arrange bricks.
3.13	625	....	Door closed.
3.13½	650	....	Naphtha valve opened one half.
3.14	750	....	
3.15	812	42.4	
3.17	900	84.8	
3.21	950	"	
3.23	1,000	"	
3.25	1,025	'	
3.28	1,050	"	
3.30	1,025	"	
3.32	1,050	"	
3.36	1,100	"	
3.37	1,125	"	Slight redness reported by some.
3.40	1,137	"	Column reported bent slightly.
3.43	1,175	"	
3.44	1,200	"	
3.47	1,250	"	
3.50	1,225	"	
3.52	1,175	"	
3.55	1,200	"	Gas shut off. Door down. Column decidedly red and bent.
4.04	387	"	Gas on and door closed.
4.08	925	"	No naphtha.
4 09	925	"	Naphtha turned on half cock.
4.10	1,000	"	
4.15	1,112	"	
4.32	1,125	"	Gas shut off. Stopped pumping.

Strength by Gordon's formula was as follows:

Breaking strength........................	902.000 lbs.	
Safe load, $\frac{1}{5}$ × 902,000.....................	180.400 lbs.	90.2 tons.

The result of Test No. 3 is shown in photographs (Fig. 10 and Fig. 11).

COLUMN TEST NO. 4.

July 6, 1896.—Fire test without water. Cast-iron column. Furnace same as Tests 1, 2, and 3.

The column was a cast-iron, hollow, round column, with flanges faced on both ends, and was uncovered. It was cast horizontally, with a dry sand core, by the Cornell Iron Works, New York. The column was the same as illustrated in photograph (Fig. 9), with the following exceptions: Length over all, 13 feet ¼ inch; thickness of flanges, 1⅝ inches; flanges reënforced by four ribs, each ⅞ inch thick, reaching from outer end of flange to cylinder, at an angle of about 45 degrees.

The weather was cloudy and there was no wind. Temperature of the atmosphere, 75 degrees Fahr.

LOG OF TRIAL.

Time. H. M.	Pyrometer. Degrees Fahr.	Hydraulic Pressure. Total Load Tons.	REMARKS.
2.22	.....	....	Wood fire lighted.
2.25	.....	84.8	Gas lighted.
2.28	.....	"	Pyrometer placed 18 in. from column.
2.29	.....	"	Door closed.
2.30	675	"	
2.31	875	"	
2.33	900	"	
2.35	912	"	
2.40	950	"	
2.43	975	"	
2.44	1,000	"	
2.45	1,000	"	
2 49	1,000	"	Naphtha used, one-quarter cock.
2.51	1,100	"	
2.52	1,125	"	More naphtha, three-eighths cock.
2.53	1,200	"	More gas.
2.54	1,300	96.1	
2.54½	1,325	84.8	
2.57	1,350	"	Column bending.
2.59	1,350	"	More naphtha, one-half cock.
3.01	1,375	"	Color reported.
3.03	1,500	"	
3.03½	1,525	"	Column yielding fast.
3.05	1,550	"	Column broke suddenly.

The result of the test is shown in photographs (Figs. 12 and 13). The fracture occurred at about the centre of the column, where the deflection was the greatest. There was a crack about five inches long, about seven inches above the fracture on the convex side of the column, showing that the column first pulled apart on the outside of the bend. No water was thrown on this column during the test.

TEST No. 5.—LOG OF TRIAL.

Time. H. M.	Pyrometer. Degree Fahr.	Hydraulic Pressure. Total Load Tons.	REMARKS.
2.16	.....	84.8	Wood fire lighted.
2.28	.....	"	Gas lighted.
2.29	600	"	Door closed. Pyrometer in place 18 inches from column.
2.31	625	"	
2.32	675	"	
2.33	700	"	
2.36	675	"	Pyrometer moved back 5 feet from column.
2.40	625	"	
2.41	675	"	
2.42	525	"	Water thrown on column one minute.
2.43	450	"	Door open. Fire out.
2.44	400	"	Door open. Fire relighted.
2.46	425	"	Door closed.
2.47	540	"	
2.49	1,000	"	Heat rising too fast.
2.51	650	"	
2.52	675	"	
2.55	700	"	
2.58	750	"	Pyrometer three feet from column.
2.59	800	"	
3.01	740	"	
3.02	750	"	Pyrometer 18 inches from column.
3.05	785	"	Pyrometer moved back 5 feet from col.
3.06	775	"	
3.09	400	"	Water on column ½ minute. Fire out. Door down.
3.16	.....	"	Gas relighted. Door closed.
3.19	675	"	Pyrometer 18 inches from column.
3.22	700	"	More air admitted.
3.24	725	"	
3.27	775	"	
3.28	800	"	
3.30	900	"	
3.35	1,025	"	
3.40	1,025	"	
3.47	1,050	"	
3.50	1,050	"	Column red.
3.55	1,075	"	Water on column ½ minute. Fire out. Door down. More water on column as it was still red.
4.13	.....	"	Gas relighted.
4.17	750	"	Pyrometer 18 inches from column.
4.21	787	"	Naphtha, one-half cock.
4.23	900	"	
4.24	1,025	"	
4.27	1,150	"	
4.29	1,200	"	
4.30	1,250	"	Column getting red.
4.31	1,275	"	Column bending.
4.32	1,280	"	
4.34	1,300	"	Pyrometer moved back. Water on column one minute.
4.35		"	Door down, and water on column again two minutes.

COLUMN TEST NO. 5.

July 10, 1896.—Fire test with water. Cast-iron column. Furnace, same as Tests No. 1, 2, 3 and 4.

The column was a cast-iron, hollow, round column, with flanges faced on both ends, and was uncovered. It was cast horizontally, with a dry sand core, by the Cornell Iron Works, New York. The column was the same as illustrated in photograph (Fig. 9), with the following exceptions: flanges were $1\frac{5}{8}$ inches thick and were reënforced with four ribs, as in Test No. 4. There was a slight defect in this casting, there being a porous portion a few inches long on one side, about 3 feet 6 inches from the lower end.

The weather was partly cloudy and sultry. There was a strong wind from the southwest. Temperature of the atmosphere was 80 degrees Fahr.

Water was thrown upon the column through about 50 feet of $2\frac{1}{2}$-inch rubber hose and a $\frac{3}{4}$-inch nozzle. The pressure at the hydrant was fifty pounds.

The result of this test is shown in photograph (Fig. 14).

The column was very red when the water was thrown on it the last time. The brick walls and arch roof cracked when water fell on them. The column was badly bent, but otherwise appeared uninjured.

Respectfully submitted,

THE COMMITTEE ON FIREPROOFING TESTS.

S. ALBERT REED, *for the Tariff Association of New York.*
GEORGE L. HEINS, *for the Architectural League of New York.*
H. DE B. PARSONS, } *for the American Society of Mechanical Engineers.*
THOMAS F. ROWLAND, JR., }

DCCI.*

THE PROGRESS IN THE MANUFACTURE OF IRON AND STEEL IN AMERICA, AND THE RELATIONS OF THE ENGINEER TO IT.

PRESIDENT'S ADDRESS, 1896.

BY JOHN FRITZ, BETHLEHEM, PA.
(President, 1895-1896.)

Gentlemen:

I have frequently been asked by members of the American Society of Mechanical Engineers, and others, to write a paper on the manufacture of iron and steel in this country, showing its progress since the time of my first connection with it. Quite recently I have not only been asked, but urged to write a paper on this subject from a mechanical and engineering standpoint, giving an outline of the early troubles, and showing the great improvements which have been made in machine tools and machinery, as well as in the manufacture of iron and steel, and after some hesitation I have concluded to make an effort to respond to these requests. In complying therewith I shall to some extent quote from a paper read before another society of engineers, and give such additional items of my experience as I have thought would be interesting.

As a beginning I will make a brief allusion to the mechanical engineer, showing his origin and growth, and what he has accomplished in the great field of metallurgy, and especially in the Bessemer and other important steel-making processes. It seems to me eminently proper that in describing the development of the mechanical engineer his growth should be considered jointly with that of the metallurgist, especially when we take into consideration how essential good iron and steel are to all engineers. In fact it is the marked improvements in the manufacture of iron and steel which have enabled the engineers to surmount difficulties

---

* Presented at the New York meeting (December, 1896) of the American Society of Mechanical Engineers, and forming part of Volume XVIII. of the *Transactions*.

and erect works which would have been well-nigh impossible before these improvements were made; and to the mechanical engineer is largely due the credit of the marvellous improvements which have been accomplished. And here let me say that but few people know anything of the labor, the troubles, trials, vexations, surprises, and disappointments which were encountered during the early stages of that now great industry, the Bessemer process; and, besides, all the physical danger to which the pioneers were constantly exposed.

When I look back and review the roll-call of memory, it brings to my mind faces of men who lost their lives while engaged in the performance of their duty; some of them were near and dear to me, being associated by the closest of personal ties. They are no more; but to those who knew them, and what they accomplished, their memory is forever sacred.

Prior to 1838 the manufacture of pig iron was in a primitive condition, that metal being practically all made in charcoal furnaces, producing from fifteen to thirty tons per week. It was converted into wrought iron in the old-fashioned charcoal fires, and was shaped into blooms for the rolling mill, and into bars for the smith by a helve hammer. The furnaces, forges, and mills were all driven by water power, and were kept in order by what was sometimes called a forge carpenter, or millwright. At this time the mills were all geared, the shafts being square, hexagon, or octagon, according to the fancy of the millwright; the wheels were secured on the square shafts by wooden blocks, and in them were driven thin iron wedges; the segments of the wheels were secured to the centre in the same manner; the roll housings were all set on wood. All this crude machinery the millwright was called on to keep in running order; consequently he became an important man.

In 1840 the use of anthracite coal and coke in blast furnaces was commenced. This required a much higher pressure of blast. Previous to this time the blowing cylinders had been made out of wood, the pressure of blast being very low, not exceeding one and a half pounds; hence a great improvement in blowing machinery became necessary.

In 1842 puddling began to come into more general use, and puddling trains had to be built, and better merchant or bar trains were now required; they were all geared, and gave much trouble. The machinist now had to be called in to help keep things in shape, and he soon took the millwright's place, and laid the foundation for the mechanical and metallurgical engineer.

In 1845 the rail mills were being built, and stronger and better workmanship was required. These mills were all geared, but the shafts were generally turned up, and wheels all bored out, and fitted up in a much better manner, which required more skill and better workmen. Puddling now became an important branch of the iron business, and the Old Harry was generally to pay to get the balls in proper shape; to do this mills were using the old Welsh hammer. Numbers of squeezers were tried and failed; finally the Burden squeezer was invented, and adopted by the mills generally, and to this day is the best machine which has ever been devised for the purpose.

In or about the year 1848 "boiling" came into use, which was a great improvement over ordinary "puddling," and gave a new impetus to the trade. From 1848 to 1856 there was no great change or marked improvement made in the business. In 1857 the three-high rail mill was successfully introduced, and in a very short time practically revolutionized the manner of rolling rails. From this time on, all the new mills which were built were driven direct, without gearing, and much stronger and better in every way. It was during this time that the great changes and improvements were being made in rolling-mill and blast-furnace machinery and also in machine-shop tools of all kinds, which enabled much better work to be turned out than had been previously possible; and this was an advance for the mechanical engineer, and prepared him for the great work which he was soon to be called on to accomplish.

In 1864 the Bessemer process was introduced, and it soon became evident that it would in a short time revolutionize the iron business. Its introduction and perfection will ever remain one of the most interesting and important epochs in the whole history of the iron business. It was now that the men who had been in training were called to the front, and nobly did they do their duty. This was the graduating period for them, and no set of men ever worked more faithfully or earned their diplomas more honestly than these men did. Their diplomas were not made of parchment, but of bright ideas, hard work, and energy, coupled with a determination which made failure impossible.

Sir Lowthian Bell, in an address before the Iron and Steel Institute in 1890, said: "In viewing the impressive but simple process of blowing a charge of metal, it is difficult to realize the disappointments and the large expenditure of money and indefatigable energy required before its present position was reached." I will go further and say that I do not believe it possible to describe the feelings of fear and anxiety which existed in the minds of those who had the immediate charge and were responsible for the result.

It is not the object, nor is it possible in a paper like this, to give a description of the process, or even faintly to describe the difficulties which were encountered in its incipient stages, but I feel as if I should do violence to my feelings were I to fail on this occasion to make some allusion to those brave and noble men who fought these early battles to a triumphant conclusion; and, as the Hon. Abram S. Hewitt has truly said, "The Bessemer invention takes its rank with the great events which have changed the face of society since the time of the middle ages"; nor am I unmindful of the assistance rendered by the brave and noble workmen who so ably supported their chiefs, and who were ever ready and willing to face any danger or difficulty which might occur.

Having already stated that the Bessemer process was introduced in 1864, of course but little steel was made in that year. I do not propose to give you a yearly array of statistics; but in 1895 the production reached the enormous quantity of 4,909,128 tons of ingots. In the same year the production of puddled iron was 1,500,000 tons, making a total of steel and puddled iron, 6,409,128 tons.

In order to show what the Bessemer process can do in coal and labor, as compared with puddling, the former can produce in ten minutes ten tons of steel ingots, with a consumption of twenty hundredweight of coal. It will require a puddling furnace ten days, with practically three men, to produce a like amount of puddled iron, and will require about twenty tons of coal. The puddling is a hard, laborious, and exhausting occupation. With the Bessemer process it is care and attention only which are called for, but these it must have.

We left the blast furnaces in 1840, making fifteen to thirty tons per week, and produced in that year 286,903 gross tons. In 1895 we have furnaces producing between two and three thousand tons per week, and others building which are expected to make much more. The total output in 1895 was 9,446,308 gross tons, which exceeds the quantity made by any other nation.

It was the marvellous increase in the production of iron and steel which took place after the year 1865 which gave such a remarkable impetus to the engineering trades. The demand for Bessemer pig iron caused new blast furnaces to be built of much larger size than formerly. The blowing engines were required to be of much greater capacity and more powerful. The material used in the construction of these furnaces stimulated other branches of business, in many instances beyond their capacity. When the Bessemer process came into use, blooming mills had to be built, new rail mills, billet mills, and plate mills; in fact, the introduction of Bessemer metal rendered the old iron-rolling machinery practically useless; consequently new, heavier, and more powerful mills had to be erected.

The rail mills, with one exception, are three-high, and fitted up with tables arranged for automatically handling the work, and they are equipped with every facility which will quicken and cheapen the handling of the material. In 1866 the Siemens open-hearth furnace for making steel was introduced, but it was some time before it came into general use; the Bessemer plant for quite a while held it in check. To-day it occupies an important position, and, in connection with the Thomas basic process, one of the great metallurgical inventions of the age, is sure to become a strong competitor of the Bessemer process. When I allude to the Siemens open-hearth furnace I do not mean that their form of hearth and ports should be strictly adhered to, as there are other styles of furnaces which have their advocates; amongst them are the partial revolving hearth, which so far has shown good results, and it certainly has advantages over the fixed hearth. What I refer to is the Siemens regenerative principle, which is truly scientific and yet perfectly simple as to its construction, and so far is the only method by which the metallurgist has been able to secure the heat necessary for making steel on the open-hearth plan; and all steel-melting furnaces, of whatever form the hearth has been constructed, use the Siemens regenerative principle. Much as I admire the Bessemer process and well know what can be accomplished with it, yet, if the users of steel insist on lower phosphorus, it will have to be made in the open hearth, and by the Thomas basic process, as the ores which will make steel of high grade by either of the acid processes are, so far as known, quite limited; and the Thomas basic Bessemer process requires high phosphorus, as the pig iron should have at least two per cent., and this is more difficult to obtain in quantity than the low is for the acid processes. Steel can be made in the open hearth, on acid lining, quite low in phosphorus, but at a greater cost, as you must start with first-class material, while the basic might be called a kind of a scavenger. I do not say this in a disparaging sense, but, on the contrary, a material which is perfectly useless (so far) in either of the acid processes, can be utilized, and a fairly good steel can be made out of it, by the basic process, and it is this quality which makes it such an important improvement in the science of metallurgy. It is, however, like all other processes; if you want to make a good article you must have the proper material to start with. Now, while it is being rapidly introduced in many parts of the country, I think it proper to say that there are large users of steel of high quality who will only use the acid open hearth.

There are several other forms of steel-making furnaces, amongst which are the Pernot and the Ponsard; both of them were designed for more rapid working. The former has an inclined rotating hearth, which keeps the metal in motion, and is supposed to work more rapidly than the fixed or stationary hearth. The latter (Ponsard) is in its construction very similar to the Pernot, it being designed to work more rapidly than the Pernot, and introduces blast like the Bessemer, thereby combining the two processes by blowing the metal partially, and then finishing it by the Siemens process. Both systems use the Siemens regenerative principle.

I have now mentioned the several processes for making steel rapidly, but to describe them fully would not only be impossible, but out of place in a paper of this kind, as it would require a large volume to give an intelligent description of them all; but I hope I have succeeded in giving you such an outline of the various processes as will enable you to form some general idea of them, and the results obtained, and shall again refer to them in speaking of the finished product.

Having given you a very brief account of the progress of the iron and steel industry from its infancy up to the enormous production in 1895, I shall now endeavor to show the wonderful changes which have been made in machine tools and shop practice. My memory of machine shops dates back to 1832 and 1833. Within a short distance of my home there were three cotton mills (and large ones for those days), two woollen, and two carding mills, and several grist mills, as they were called at that time.

At one of the large cotton mills they had a machine shop, where the principal repairs for all the mills in the neighborhood were generally made. My father, being a millwright and machinist, as well as a small farmer, did all the important repairs for all the mills; in this shop consequently I spent all the spare time I could get off the farm, and it was a rare treat for me to get there. The tools consisted of two small lathes for turning iron and one for turning wood; all of them had wooden "shears" or beds. There was also a machine for cutting light gears, which to me was a great curiosity; there were several vises, and quite a number of small tools; one they called a "doctor," which was used to correct "drunken threads," as all screws of any importance were cut with the chaser. A few years later I frequently wished I had one of them to straighten up some crooked threads which I would unfortunately get on my hands. This little insight of shop practice was not all that I gained. It gave me an opportunity to see the machinery in operation for picking, carding, spinning, and weaving, the remembrance of which has always been a source of pleasure as well as profit.

In 1838 I went to learn my trade. In the machine shop there were about the same number and character of lathes as in the shop mentioned, but they were larger, one of them being a double-ender, for the purpose of boring out wheels which were too large to swing over the shears. There was also a drill press, made out of a lathe-head casting, bolted against a 12 x 12 inch wooden post; it was not a very sightly machine, but it did good work for the time. We made small brass castings, built small boilers and small engines, and did all kinds of country machine and blacksmith work; we made our own patterns, without any drawings. It was from this shop that I was sent out from time to time to do some repairs at the small charcoal furnaces, forges, and mills. The rough training I had at this primitive shop proved of great value to me in after-life.

In 1843 a party commenced to build a bar mill, which was a new business in that neighborhood, and I had expected to have learned something from it, as I supposed they would have better tools in order to have their rolls properly turned, as it would be all important to have them true to make bar iron; but, much to my regret, the party failed before the mill was completed.

In 1846 I became connected with a bar mill, and practically the only tool they had was a roll lathe with the old-fashioned fixed rest, and the tool was regulated by keys driven with a chipping hammer. After a time, with a good deal of persuasion and some strong talk, I succeeded in getting some small lathes, a planer, and a press drill. About this time some of the larger iron works put in some better tools, but they were all small. Indeed, up to this time about all the tools we had were a two-hand chisel, a sledge, a chipping hammer and chisel, a file, and a ratchet drill. The mills all being geared, we had a set of drifts to suit the keyways in the various wheels and shafts.

In 1854 I went to the Cambria Iron Works at Johnstown, and well knowing the importance of having good tools for the completion and perfection of such a plant as that was intended to be, I earnestly urged the company to get some of the best tools which were built, which they consented to, and at the same time had some special lathes built, and made much heavier than any which had been previously designed. This was the commencement of a better class of tools about an iron works, and greatly facilitated the great improvements which soon after took place. But this is over forty years ago, and what was a good tool at that time is a very indifferent one to-day, as the machine-shop equipments have fully kept pace with the times. The builders have not only perfected the machines in general use, by making them heavier, more powerful, and more convenient, but they are building special tools for almost all manner of purposes, which greatly facilitates, perfects, and cheapens the work, and renders it possible to get parts of a machine made in different shops, and have them all fit together as though they had all been made in one place.

I look back to my early days in the shop, now nearly sixty years ago, and call to my mind the equipments of the shop in the way of tools which I have already described, and compare the facilities for making drawings of to-day with those at that time, when the complete outfit consisted of a board, a carpenter's square, a pair of compasses (as we then called them), a bevel, a lead pencil, and a piece of chalk, and a jack plane to prepare the board for another drawing. After a time we adopted the plan of making models in skeleton, full size, especially when any motion was to be worked out, and also made, when it was possible, all the drawings full size; when too large to admit of this, we would make important sections full size, and this practice I am not ashamed to follow at the present time, as it has many advantages.

The small shop tools for a lathe consisted of a hook tool with

FIG. 17.

FIG. 16.

a sharp tit on the bottom to hold it on the rest (which was made of soft wrought iron); the tool was made out of a steel bar about ½ by ¾ inch, generally put in a wooden stock some 2½ inches in diameter, with a handle on the lower side, as you see in Figs. 16 and 18. In addition to the tool just described, there was a finishing tool made in the shape of a spike-head, with a cutting edge on both sides, one to do the cutting or finishing, and the other to keep it in position on the rest; it also had a wooden handle, but of different construction from the handle of the hook tool, as it was held against the shoulder instead of under the arm; next was a chaser, and last, as usual, was the " doctor," to cure in a measure "drunken threads," which frequently occurred. The small tools consisted of a pair of outside and an inside pair of calipers, a file, and a steel straight-edge (home-made), 12 inches long, and divided into inches, ½ inch, ¼ inch, ⅛ inch, 1/16 inch, and with one of the inches divided into thirty-seconds, and used for measuring as well as for a straight-edge.

Now let us for a moment note the equipments of a modern machine shop for comparison. First, they have a great drawing room, and a good corps of men well skilled in their art, and are equipped with everything which is essential for producing work correctly and quickly, with blue prints by the score. The machine shop of to-day is a marvel in completeness of equipment for doing work correctly and with rapidity, having special small tools for all purposes. The accuracy with which their round gauges are fitted up is such that a machinist of fifty years ago could not possibly realize how it could be done. Suppose you could have in his presence separated a one-inch gauge, and held the plug in your hand for a few moments, without calling his attention to it, then handed it back, and requested him to put it in its place again; when he found he could not get them together, he would think there were some old-time witches about.

The latter part of the present century is remarkable for the success attained in designing and perfecting instruments and methods for correcting the old and imperfect systems of former years. The invention and construction of instruments of precision and the methods of their calibration and adjustment, which enable measurements to be taken within one ten-thousandth of an inch; machines for measuring tapers, which enable the mechanic to fit taper work with almost the same perfection and facility as parallel work, are refinements of practice peculiar to modern times, Fig 19.

Fig. 18.

and of which a mechanic of fifty years ago could have no conception, either as to their possibility or practical value.

The great improvement which has taken place in the manufacture of steel, both in quality and quantity, and its general adoption in machine building; the using of steel higher in carbon, the introduction of nickel, and the treatment by oil tempering, have rendered the tools I have already referred to, practically useless for a very large part of the work which is now being done; consequently new tools are required which are much heavier and more powerful than any which had been built up to this time.

The Bethlehem Iron Company have four lathes in use, all of the same pattern; one of them is used for what is called a cutting-off lathe, and frequently employs twelve tools, six on each side, made out of the best steel that can be had, size one inch by six inches, and are forced to cut all they will stand. (See Figs. 17 and 19 for comparison with the tool of 1838 and before.) These lathes have had work in them weighing over 190,000 pounds. They have planers which have finished castings which each weighed 165 tons, and the finishing of nickel-steel armor-plate requires tools of great power and special design. (See Figs. 20 and 21 at end of the paper.)

The workmanship on cranks and shafting has to be of the highest order; consequently the machines on which they are finished have to be massive and of great power, and fitted up in the best possible manner; the journals of the shaft must be round, and perfectly parallel, and the flanges must be true with the axis or body of the shaft, and the parts generally have to be interchangeable, the flanges being plain on the face, relying entirely on the bolts in the flanges to keep the sections true to each other. This requires handiwork of a very high order. Shafts 18 or 20 inches diameter, 60 or 70 feet or more in length, all bolted solidly together, lying in V's, can be turned easily by one man with a lever of 36 inches in length; this proves the high character of the work.

In speaking of the manufactured products of iron and steel, I shall take up first the subject of forgings made of iron. These were originally made out of faggots (bundles of iron bars) heated in a reverberatory furnace, and welded and shaped under a hammer which was generally too light; the force of the blow did not reach the centre, and the result was that forgings of any considerable size were unsound in the middle. This occurred to such an extent that, in my early connection with machinery, I discarded forged shafts entirely and substituted cast iron melted in an air furnace, and continued to use it, with one single exception, until we learned how to make, heat, forge, and treat steel in such a manner as to practically get it solid and free from internal strains, and were ready to recommend it as the proper material for shafts and miscellaneous forgings.

I shall for a moment return to wrought iron forged shafts. I have known them to fail and be replaced by cast iron, which never gave any trouble, and a practical person giving the subject any serious consideration will see at once why a cast iron shaft should be better and safer than wrought iron, as they were made.

In the first place, you can, by the use of the proper kind of pig iron, intelligently melted in an air furnace, get a tensile strength of 32,000 pounds per square inch, and, with a proper sink-head—I mean large, and the larger the better—you can get practically a solid casting, and I might add homogeneous and close in the grain; while, as I have already stated, the forged shaft will, in all probability, be unsound in the centre and coarse in the grain, and its tensile strength will be little if any greater than cast iron.

I shall now refer to the single exception which I have before alluded to, believing a brief description of the shafts—and giving the reason why I used wrought iron and steel in place of cast iron, which had served me so well for a period of nearly fifty years—will be both interesting and instructive to you all, as it was to me at that time. First, the reason for using wrought iron and steel in place of cast iron was, that I wanted a three-throw crank for a three-cylinder engine, and had to use a built-up crank; at that time a solid forged crank of such dimensions as was needed could not have been made in this country. The stroke of the engine being short, reduced the distance from centre of shaft to the centre of crank pin to such an extent that I was compelled to reduce the diameter of the shafts to the smallest size consistent with safety in order to get sufficient metal between the holes in the crank to give the required strength. Steel at that time being more expensive than wrought iron, it was economy to use iron when it would answer the purpose. I concluded to use steel for the main shaft and the first crank pin, and the others wrought iron. Not having at that time any overflow of confidence in either forged iron or steel shafts, and being anxious to get the best that could possibly be had, I consulted a friend who was using steel as to where was the best place to go for the steel the acid processes. Steel can be made in the open hearth, on acid lining, quite low in phosphorus, but at a greater cost, as you must start with first-class material, while the basic might be called a kind of a scavenger. I do not say this in a disparaging sense, but, on the contrary, a material which is perfectly useless (so far) in either of the acid processes, can be utilized, and a fairly good steel can be made out of it, by the basic process, and it is this quality which makes it such an important improvement in the science of metallurgy. It is, however, like all other processes; if you want to make a good article you must have the proper material to start with. Now, while it is being rapidly introduced in many parts of the country, I think it proper to say that there are large users of steel of high quality who will only use the acid open hearth.

There are several other forms of steel-making furnaces, amongst which are the Pernot and the Ponsard; both of them were designed for more rapid working. The former has an inclined rotating hearth, which keeps the metal in motion, and is supposed to work more rapidly than the fixed or stationary hearth. The latter (Ponsard) is in its construction very similar to the Pernot, it being designed to work more rapidly than the Pernot, and introduces blast like the Bessemer, thereby combining the two processes by blowing the metal partially, and then finishing it by the Siemens process. Both systems use the Siemens regenerative principle.

I have now mentioned the several processes for making steel rapidly, but to describe them fully would not only be impossible, but out of place in a paper of this kind, as it would require a large volume to give an intelligent description of them all; but I hope I have succeeded in giving you such an outline of the various processes as will enable you to form some general idea of them, and the results obtained, and shall again refer to them in speaking of the finished product.

Having given you a very brief account of the progress of the iron and steel industry from its infancy up to the enormous production in 1895, I shall now endeavor to show the wonderful changes which have been made in machine tools and shop practice. My memory of machine shops dates back to 1832 and 1833. Within a short distance of my home there were three cotton mills (and large ones for those days), two woollen, and two carding mills, and several grist mills, as they were called at that time.

At one of the large cotton mills they had a machine shop, where the principal repairs for all the mills in the neighborhood were generally made. My father, being a millwright and machinist, as well as a small farmer, did all the important repairs for all the mills; in this shop consequently I spent all the spare time I could get off the farm, and it was a rare treat for me to get there. The tools consisted of two small lathes for turning iron and one for turning wood; all of them had wooden "shears" or beds. There was also a machine for cutting light gears, which to me was a great curiosity; there were several vises, and quite a number of small tools; one they called a "doctor," which was used to correct "drunken threads," as all screws of any importance were cut with the chaser. A few years later I frequently wished I had one of them to straighten up some crooked threads which I would unfortunately get on my hands. This little insight of shop practice was not all that I gained. It gave me an opportunity to see the machinery in operation for picking, carding, spinning, and weaving, the remembrance of which has always been a source of pleasure as well as profit.

In 1838 I went to learn my trade. In the machine shop there were about the same number and character of lathes as in the shop mentioned, but they were larger, one of them being a double-ender, for the purpose of boring out wheels which were too large to swing over the shears. There was also a drill press, made out of a lathe-head casting, bolted against a 12 x 12 inch wooden post; it was not a very sightly machine, but it did good work for the time. We made small brass castings, built small boilers and small engines, and did all kinds of country machine and blacksmith work; we made our own patterns, without any drawings. It was from this shop that I was sent out from time to time to do some repairs at the small charcoal furnaces, forges, and mills. The rough training I had at this primitive shop proved of great value to me in after-life.

In 1843 a party commenced to build a bar mill, which was a new business in that neighborhood, and I had expected to have learned something from it, as I supposed they would have better tools in order to have their rolls properly turned, as it would be all important to have them true to make bar iron; but, much to my regret, the party failed before the mill was completed.

In 1846 I became connected with a bar mill, and practically the only tool they had was a roll lathe with the old-fashioned fixed rest, and the tool was regulated by keys driven with a chipping hammer. After a time, with a good deal of persuasion and some strong talk, I succeeded in getting some small lathes, a planer, and a press drill. About this time some of the larger iron works put in some better tools, but they were all small. Indeed, up to this time about all the tools we had were a two-hand chisel, a sledge, a chipping hammer and chisel, a file, and a ratchet drill. The mills all being geared, we had a set of drifts to suit the key-ways in the various wheels and shafts.

In 1854 I went to the Cambria Iron Works at Johnstown, and well knowing the importance of having good tools for the completion and perfection of such a plant as that was intended to be, I earnestly urged the company to get some of the best tools which were built, which they consented to, and at the same time had some special lathes built, and made much heavier than any which had been previously designed. This was the commencement of a better class of tools about an iron works, and greatly facilitated the great improvements which soon after took place. But this is over forty years ago, and what was a good tool at that time is a very indifferent one to-day, as the machine-shop equipments have fully kept pace with the times. The builders have not only perfected the machines in general use, by making them heavier, more powerful, and more convenient, but they are building special tools for almost all manner of purposes, which greatly facilitates, perfects, and cheapens the work, and renders it possible to get parts of a machine made in different shops, and have them all fit together as though they had all been made in one place.

I look back to my early days in the shop, now nearly sixty years ago, and call to my mind the equipments of the shop in the way of tools which I have already described, and compare the facilities for making drawings of to-day with those at that time, when the complete outfit consisted of a board, a carpenter's square, a pair of compasses (as we then called them), a bevel, a lead pencil, and a piece of chalk, and a jack plane to prepare the board for another drawing. After a time we adopted the plan of making models in skeleton, full size, especially when any motion was to be worked out, and also made, when it was possible, all the drawings full size; when too large to admit of this, we would make important sections full size, and this practice I am not ashamed to follow at the present time, as it has many advantages.

The small shop tools for a lathe consisted of a hook tool with

Now, after all the labor, anxiety, vexations, and disappointments which have been suffered, and in the face of the final success, are we to be told that it cannot be used, because it requires too much skill and careful treatment in both forge and shop? I sincerely hope and believe that we are not. But there is another all-important feature of this subject, and that is the practical knowledge which is necessary in order to select the proper quality of steel to be used for the various purposes to which it is to be applied; and the want of this knowledge has been the cause of many failures, and this knowledge can only be obtained by a large practical experience. When I say proper quality of steel for various purposes, I do not mean steel alone low in phosphorus and sulphur (for all steels should be low in both these obnoxious elements), but what I mean is the proper amount of carbon to suit the physical conditions which it will be called upon to endure, and experience must be our guide. Fortunately, much of it has already been obtained, so that there ought to be but little excuse for mistakes and failures.

It is not the object of this paper to enumerate the various purposes for which steel should be used, or to indicate the proper amount or grade of carbon to suit the various and changeable conditions to which it will be subjected, but simply to call your attention to the importance of proper selection.

I will now speak briefly of the subject of forging steel shafts hollow, as none other should be used. If not large enough in diameter to forge hollow, let them be bored out and properly annealed. Next I will call your particular attention to the all-important matter of the system to be adopted. While I was contemplating the design of a forging plant for making both light and heavy forgings, fortunately I met Lieutenant Jaques, U. S. N., who was secretary of the American Gun Foundry Board, and had just returned from abroad, where they had been inspecting the naval armaments of Europe, and they also investigated the various systems of forging gun material, and he was so highly impressed with the Whitworth hydraulic system of forging that he made arrangements with Sir Joseph Whitworth & Co., Limited, of Manchester, England, for the machinery for a complete forging plant, to be erected in any place in the United States and by any parties with whom he might desire to make arrangements. Shortly after Lieutenant Jaques's return he visited Bethlehem, and told me what he had seen done in the way a sharp tit on the bottom to hold it on the rest (which was made of soft wrought iron); the tool was made out of a steel bar about ½ by ¾ inch, generally put in a wooden stock some 2½ inches in diameter, with a handle on the lower side, as you see in Figs. 16 and 18. In addition to the tool just described, there was a finishing tool made in the shape of a spike-head, with a cutting edge on both sides, one to do the cutting or finishing, and the other to keep it in position on the rest; it also had a wooden handle, but of different construction from the handle of the hook tool, as it was held against the shoulder instead of under the arm; next was a chaser, and last, as usual, was the " doctor," to cure in a measure "drunken threads," which frequently occurred. The small tools consisted of a pair of outside and an inside pair of calipers, a file, and a steel straight-edge (home-made), 12 inches long, and divided into inches, ½ inch, ¼ inch, ⅛ inch, $\frac{1}{16}$ inch, and with one of the inches divided into thirty-seconds, and used for measuring as well as for a straight-edge.

Now let us for a moment note the equipments of a modern machine shop for comparison. First, they have a great drawing room, and a good corps of men well skilled in their art, and are equipped with everything which is essential for producing work correctly and quickly, with blue prints by the score. The machine shop of to-day is a marvel in completeness of equipment for doing work correctly and with rapidity, having special small tools for all purposes. The accuracy with which their round gauges are fitted up is such that a machinist of fifty years ago could not possibly realize how it could be done. Suppose you could have in his presence separated a one-inch gauge, and held the plug in your hand for a few moments, without calling his attention to it, then handed it back, and requested him to put it in its place again; when he found he could not get them together, he would think there were some old-time witches about.

The latter part of the present century is remarkable for the success attained in designing and perfecting instruments and methods for correcting the old and imperfect systems of former years. The invention and construction of instruments of precision and the methods of their calibration and adjustment, which enable measurements to be taken within one ten-thousandth of an inch; machines for measuring tapers, which enable the mechanic to fit taper work with almost the same perfection and facility as parallel work, are refinements of practice peculiar to modern times,

FIG 19.

FIG. 18.

more than a fair one for a comparison of a wrought-iron shaft with one of steel, for no such results could have been obtained from wrought-iron shafts as formerly made. The tests were taken from a puddled bar reworked car axle. The tensile strength in the different test bars taken from this axle vary between 44,000 and 45,000 pounds, the elastic limit between 18,000 and 23,000 pounds, the elongation between 21 and 27 per cent., the contraction of area between 40 and 48 per cent. Compare this with some results obtained in hollow-forged, oil-hardened, and annealed nickel-steel shafting, the physical properties of which are: tensile strength, 95,000 to 100,000 pounds; elastic limit, 60,000 to 65,000 pounds; elongation, 20 to 25 per cent.; contraction of area, 55 to 60 per cent. It is safe to assume that in shafts of any size a nickel-steel shaft as above would have three times the elastic strength of a wrought-iron shaft, and taking into consideration the fact of hollow forging with judicious proportioning of inside and outside diameter, it would be possible to make a nickel-steel shaft of one-quarter the weight of a wrought-iron shaft and obtain the same elastic or working strength. The greater contraction of area shown by the nickel steel proves it a safer material against shock, as the greater the contraction the greater will be the amount of local distortion which can take place without rupture. This is clearly shown by the old but still reliable bending test, which is always in proportion to the contraction of area, and not to the elongation, as most commonly supposed. This nickel-steel test is no fancy one gotten up for show, but was taken from the forging, and was the test on which the work was actually accepted, and was taken from a prolongation of the forging of a shaft 17 inches diameter. The hole was 11 inches diameter. You will notice that the shaft from which this test was taken was specially treated by oil-hardening and annealing. While I am fully aware that there are many persons, and some of them high in authority, who doubt the propriety of such treatment, yet when the work is in a proper shape to receive the treatment, and it is made with intelligence and care, my experience has fully convinced me that this special treatment produces the best possible results, and for many purposes it is indispensable. Steel can be made higher in tensile strength and elastic limit than the test referred to, but to some extent it will be at the expense of extension and contraction of area.

Should steel of any kind or grade be constantly strained near to its elastic limit, it is only a question of time when it will fail, as, for instance, in shafting which is out of line sufficiently to strain the metal near to its limit. Every revolution surely tends to its ultimate destruction.

Having already said that it was not the object of this paper to give any definite instructions as to the kind of steel to be used for various purposes, yet a few remarks showing how very difficult it would be to do so may prove both interesting and instructive. Forgings are made from grades varying from .10 carbon to 1.00, according to the purpose for which it is to be used.

The physical properties as shown by test bars will vary with the carbon, the size of forging, and the amount of work put upon it; that is, two similar forgings made from different sized ingots will give different results. The treatment after forging, such as annealing, oil-hardening, etc., where varying temperatures produce widely varying results, are conditions to be considered, so that it is quite impossible to give definite figures unless the conditions are well known. Take for instance two forgings of considerable difference in size and shape, both of which must show about the following properties:

Tensile.	Elastic Limit.	Elongation.	Contraction of Area
80,000	45,000	15	50%

One may require a steel of .30 carbon and the other .45 carbon. These two steels, if rolled down to small bars, would show about the following results:

Carbon.	Tensile Strength.	Elastic Limit.	Elongation.	Contraction of Area.
30	85,000	50,000	22	55%
45	95,000	60,000	18	50%

Under ordinary conditions the elastic limit is about 50 per cent. of the tensile strength. In order to increase this proportion special treatment of the forging is resorted to. The elongation and contraction of area are also increased by treatment, especially the latter, so that with the elastic limit and contraction we have a safe index as to the condition of the metal, and as these two properties vary much less with the shaft and crank pin, and took his advice and so ordered them. The iron shafts and crank pins were from, what I considered at that time, the best forge plant in the country. Having had some previous experience in a small way with both metals, and the results not being altogether lovely, I thought it prudent to see in what condition the metal in the centre of these forgings was. In order to show this, a hole about four inches in diameter was bored through the centre of them all, seven in number, and all were unsound in the centre; in the iron the imperfections ran longitudinally, and the four-inch hole practically cleaned them out. The steel shaft, which was about fourteen inches in diameter and some twelve feet in length, proved unsound in the four-inch hole, and showed serious imperfections in the form of large cracks or openings running, as it were, circumferentially on the inside of the shaft; the hole was enlarged to about six and one-half inches in diameter, and some of the imperfections were still visible. The position of the shaft was such when in use that, should it give way, it would not be likely to do any serious damage; so we concluded to use it. When the hole was bored through the steel crank pin it showed so badly that we split it in two lengthwise. It was full of cracks, some of them extending almost to the outer edge. Its condition was frightful to a person who was contemplating the building of a large plant for the purpose of making steel forgings, as I was at that time. My experience in making steel, in heating, rolling, and forging, had already convinced me that it would require great skill, and still greater care, to prevent imperfections in the interior of steel forgings, yet I was not prepared to witness anything approaching the condition which the splitting of this forging revealed. The chemical analysis, as I remember, was fairly good. There had been some blow-holes in the ingot, as there are in too many of them. To my mind the trouble was almost entirely due to two causes: first, the ingot had been put into a hot furnace and heated up too rapidly, pulling the centre apart, causing internal ruptures; secondly, it had been forged under a light hammer, in all probability using steam on top of the piston, which gives a quick stroke, and does not give the metal time to flow, or the force of the blow to reach the centre of the ingot, consequently elongating the outside more rapidly than the interior; and the imperfections, whatever they may be, are always the weaker parts, and the effect of the blow on the outside elongates them, as it were, by pulling them apart more rapidly than the sound outside of the ingot; consequently the imperfections were greatly augmented.

Mr. W. F. Durfee, in a paper read before the Franklin Institute on the "Conditions which Cause Wrought Iron to be Fibrous and Steel Low in Carbon to be Crystalline"—and a most admirable paper it is, and one which every maker and user of steel should read and study—says, in regard to unsound ingots: "It is a common opinion that one of the reasons why steel forgings are often found hollow in the interior is the failure to work them under a sufficiently heavy hammer, but no hammer, not even the hammer of Thor, can do more than aggravate the evil of internal ruptures of ingots in steel." This is well said, and is a truth which cannot be gainsaid. It was imperfect or unsound ingots, lack of knowledge in heating, in forging, and also the want of proper skill to treat the forgings properly, after they were made, which caused so many failures in the early days of its manufacture, which made many people think and believe that there was some mysterious uncertainty in the metal. Consequently they discarded its use altogether; and to some extent this impression is still in existence, and, to my surprise, only a short time since quite a prominent engineer said to me that he was still using wrought-iron shafts on account of the uncertainty of steel forgings. To those persons who were using steel low in carbon, for various purposes, I would urge the use of a higher grade of steel, well knowing it would answer their purpose better; but was answered by saying that it required too high a grade of skill to utilize it; they must have a material which any one could handle, consequently the steel was so low in carbon that it was no better than iron, and in many instances not as good. My own early experience having fully convinced me that nearly all the failures were due to the use of improper kind and grade of steel, being too low in carbon, and in most instances so high in phosphorus and sulphur that nothing but failure could be expected, yet it was useless to attempt to convince them that a higher-carbon steel of proper analysis would answer their purpose. They said no; we are going back to iron; we know what that is, and we can trust it. I was told that a machinist had let a locomotive crank pin fall off his shoulder on the shop floor and it broke in two pieces, and I could readily imagine that a condition could exist which would render it liable to break from the most trifling cause. I also was told that in pinching a locomotive back and forth in the shop, in order to set the valves, that a steel crank pin was broken, and many other mysterious cases, as the laymen called them, were reported. At all events the general condition of steel forgings was such that it was not safe to use them where loss of life might result from failure. I have already alluded to phosphorus and sulphur as most deleterious elements in steel. There are, however, still some people who contend that phosphorus to an extent not in excess of twelve one-hundredths (.12) will do no harm in low steel, and I have been told quite recently that a person who posed as a mechanical engineer and a steel maker, endorsed that position. He may be both, but I will take this occasion to put myself on record by saying that I have no use for phosphorus in any shape or form whatever, and by keeping it low you can increase the carbon, which is in the right direction for good steel.

Having shown you something of the character of steel in its early days, and its failures, and the disrepute into which it fell, let us suppose that the mechanical engineers, who at that time were the men who had charge of the practical part of the steel business, had said that steel was no good, and dropped it, and said, "We will go back to the old concrete of metal and cinder again; it is good enough"—then where would we have been to-day? But they did nothing of the kind; and let me tell you the mechanical engineer of that day was not made of that kind of material, for the engineers who, in face of the prejudices of a continent, advocated the substitution of steel for iron were men who regarded obstacles and prejudices as things which were made to be conquered. Having been on many occasions placed in much the same situation in other lines, he had gone far enough to see that there was a valuable germ in steel for the future, and, if properly cultivated, it was sure to produce great results. What did he do? Took off his coat, called to his aid that all-important adjunct to steel makers, the chemist, and then went to work as he had done many times before when things looked equally discouraging, saying, "This seems to be a great thing, and we will put it through," and produced the grandest material for construction purposes that the world has ever known, and, as I said before, which will enable engineers to solve great constructive problems which, but for the improvements in the art of steel making, could not have been accomplished.

Now, after all the labor, anxiety, vexations, and disappointments which have been suffered, and in the face of the final success, are we to be told that it cannot be used, because it requires too much skill and careful treatment in both forge and shop? I sincerely hope and believe that we are not. But there is another all-important feature of this subject, and that is the practical knowledge which is necessary in order to select the proper quality of steel to be used for the various purposes to which it is to be applied; and the want of this knowledge has been the cause of many failures, and this knowledge can only be obtained by a large practical experience. When I say proper quality of steel for various purposes, I do not mean steel alone low in phosphorus and sulphur (for all steels should be low in both these obnoxious elements), but what I mean is the proper amount of carbon to suit the physical conditions which it will be called upon to endure, and experience must be our guide. Fortunately, much of it has already been obtained, so that there ought to be but little excuse for mistakes and failures.

It is not the object of this paper to enumerate the various purposes for which steel should be used, or to indicate the proper amount or grade of carbon to suit the various and changeable conditions to which it will be subjected, but simply to call your attention to the importance of proper selection.

I will now speak briefly of the subject of forging steel shafts hollow, as none other should be used. If not large enough in diameter to forge hollow, let them be bored out and properly annealed. Next I will call your particular attention to the all-important matter of the system to be adopted. While I was contemplating the design of a forging plant for making both light and heavy forgings, fortunately I met Lieutenant Jaques, U. S. N., who was secretary of the American Gun Foundry Board, and had just returned from abroad, where they had been inspecting the naval armaments of Europe, and they also investigated the various systems of forging gun material, and he was so highly impressed with the Whitworth hydraulic system of forging that he made arrangements with Sir Joseph Whitworth & Co., Limited, of Manchester, England, for the machinery for a complete forging plant, to be erected in any place in the United States and by any parties with whom he might desire to make arrangements. Shortly after Lieutenant Jaques's return he visited Bethlehem, and told me what he had seen done in the way of hollow forging. I was so impressed with his account that I at once advised the Bethlehem Iron Company to make arrangements for the machinery for a complete plant, which, after a time, they concluded to do, and through Lieutenant Jaques a contract was entered into with Sir Joseph Whitworth & Co., Limited, for the machinery for a complete forging plant. Mr. Jaques resigned his commission in the Navy and became my associate in the inauguration and development of the Bethlehem plant which is now so well known. It is to Sir Joseph Whitworth and his able superintendent, Mr. M. Gledhill, that the world is indebted for the most perfect system of forging which has ever been devised, and to Lieutenant Jaques the credit is due for its introduction into this country. In connection with the forging plant was included a hydraulic compression plant, under which the fluid steel is compressed during its solidification, which practically prevents cracks, piping, and blow-holes, and greatly reduces segregation, which are vital considerations in the manufacture of steel ingots. An imperfect ingot caused by piping or cracks should be condemned to remelting.

The subject of hollow forgings being one in which the mechanical engineer is more or less interested, I will give a brief description of the process, and how the ingot is prepared. Having already told you that the metal is subjected to pressure while in a fluid condition, I will now commence with a cold ingot. It is first examined externally, and if there are no imperfections visible it is then put into a powerful lathe, and after the proper discard is cut off it is then cut to the proper length, that being determined by the final weight of the forging for which it is intended. Next it goes to the boring mill, and is bored out to a size corresponding to the diameter of the hole in the finished forging. You now have the ingot (or such part as you want) in the best possible shape for examination; and this is not all, for the centre of the ingot is always the most undesirable part of it, and the boring of the hole gets it out of the way entirely. We now have it in the most desirable condition possible for the heating furnace, where it next goes, and it is in the heating that it is exposed to its greatest danger, and where skill and the greatest possible care are required. It must be charged in a cold furnace, which should be a preheating furnace, and heated up slowly until the heat reaches the centre; it is then taken to the forge furnace, and heated slowly and regularly (in order to prevent internal tainly a privilege in itself; but to have had my labors recognized as they have been this evening by the President of this Society, by the possessor of the Bessemer gold medal, and by the Dean of the steel industry of this country, is an honor for which I desire to express my gratitude, not only to the President and the Secretary of the Navy, who appointed me a member of the American Gun Foundry Board; to those steel-makers and producers of war material abroad who gave me the means of accomplishing my work, and to the steel makers of the United States, many of whom are present here to-night; but to you, Mr. President, for the benefit of your association and encouragement. (Applause.)

The President.—I see that Mr. Andrew Carnegie is here.

Mr. Andrew Carnegie.—If you will allow me to address you also as Dean, Mr. President, I would like to ask some questions which ought to bring out a most interesting discussion; for you know there is nothing which so well qualifies a man to draw out others as to know nothing about the subject under consideration. He will ask some foolish question, and then others who really know something begin to answer, and the result is that we all learn.

The Dean has said that that big lathe of his is so rigged that the tools which are upside down on the back of the lathe, work better than downside up. (Laughter.) I think he ought to enlighten us on this mystery. Then I think that a wayfaring man would find it difficult to accept our President's idea that a huge steel shaft, or anything else, can be strengthened by taking the very heart out of it, especially since all who know him feel that it is his heart which makes our President himself so powerful and influential with all of us who know him. I say this without meaning any reflections upon his head. (Laughter.)

I came here to-night to see once more the pleasant face of my friend, and because I knew he would tell us something interesting. I suppose there is no man in the United States who has more cause for gratitude to the profession of mechanical engineering than the speaker, who is admitted to-night among mechanical engineers, and who wears the wedding garment of membership in your honored Society. I hope that I am received among you for other reasons, and perhaps satisfactory, outside of my attainments as a mechanical engineer. (Applause.)

I congratulate you, Mr. President, upon your youthful looks. I knew you were good, but I never knew before that you were more than a fair one for a comparison of a wrought-iron shaft with one of steel, for no such results could have been obtained from wrought-iron shafts as formerly made. The tests were taken from a puddled bar reworked car axle. The tensile strength in the different test bars taken from this axle vary between 44,000 and 45,000 pounds, the elastic limit between 18,000 and 23,000 pounds, the elongation between 21 and 27 per cent., the contraction of area between 40 and 48 per cent. Compare this with some results obtained in hollow-forged, oil-hardened, and annealed nickel-steel shafting, the physical properties of which are: tensile strength, 95,000 to 100,000 pounds; elastic limit, 60,000 to 65,000 pounds; elongation, 20 to 25 per cent.; contraction of area, 55 to 60 per cent. It is safe to assume that in shafts of any size a nickel-steel shaft as above would have three times the elastic strength of a wrought-iron shaft, and taking into consideration the fact of hollow forging with judicious proportioning of inside and outside diameter, it would be possible to make a nickel-steel shaft of one-quarter the weight of a wrought-iron shaft and obtain the same elastic or working strength. The greater contraction of area shown by the nickel steel proves it a safer material against shock, as the greater the contraction the greater will be the amount of local distortion which can take place without rupture. This is clearly shown by the old but still reliable bending test, which is always in proportion to the contraction of area, and not to the elongation, as most commonly supposed. This nickel-steel test is no fancy one gotten up for show, but was taken from the forging, and was the test on which the work was actually accepted, and was taken from a prolongation of the forging of a shaft 17 inches diameter. The hole was 11 inches diameter. You will notice that the shaft from which this test was taken was specially treated by oil-hardening and annealing. While I am fully aware that there are many persons, and some of them high in authority, who doubt the propriety of such treatment, yet when the work is in a proper shape to receive the treatment, and it is made with intelligence and care, my experience has fully convinced me that this special treatment produces the best possible results, and for many purposes it is indispensable. Steel can be made higher in tensile strength and elastic limit than the test referred to, but to some extent it will be at the expense of extension and contraction of area.

Mr. Robert Hunt.—My friends who know me, Mr. President, will recognize that he who has a high forehead, such as I, takes a means to avoid the dye for his hair which Mr. Carnegie accuses his friends of using. (Laughter.) But, after all, I still hope I am a boy, as Mr. Fritz has told you.

I have been quite struck with the great ability which he has shown in all directions, and with his apparent frankness and want of guile. At the same time he possesses that great Pennsylvania quality of going to the point which he desires to reach, in spite of all obstacles. A few minutes ago he told you that the way to make a good steel shaft was to take the centre out of it. Now, I remember upon a memorable occasion—and made memorable through the good efforts of that dear departed friend of ours to whose memory we will pay our tribute to-morrow—that when Mr. Leavitt was called upon to give his testimony as to Mr. Fritz's abilities as a steel maker, he pointed out that he, Mr. Fritz, had discovered that the true chemical way to eliminate phosphorus was to bore the centre out of whatever he made (laughter)—thus doing it mechanically. He is a great mechanic—not much of a chemist, but a tremendous mechanic. He started out with this little instrument (referring to Mr. Fritz's hook-tool) and he developed that (pointing to drawing of a lathe).

The President.—Show me how I held that.

Mr. Hunt.—You said it jerked you. I don't want to take any risks. (Laughter.) And he undertakes mechanically to solve the whole trouble, and I don't blame him. With the metallurgical materials with which he has had to deal I should have thought he would have built a bigger lathe. But I consider it a great privilege that to-night we have listened to this address. It is a great privilege to us of the steel world, who have done our little part in trying to accomplish something for that world, and incidentally for ourselves, to listen to the words from our master, from our teacher, and, if we were not so near the same age, I would say our father. But sometimes I think he is our stepfather. What a great stepfather he has been to many of us! And when we have had troubles and difficulties and wondered how these would be overcome, he was always read[illegible] give us good [illegible]uragement and advice, and be[illegible]at there was [illegible] from which he [illegible]viated, and [illegible] "Be true to [illegible] you will be [illegible]d no matt[illegible]es may seem length and diameter of test bar, they are more valuable in comparing results from varying sizes of test bar. As the carbon in steel increases, the variation, due to work reduction, becomes less, while that of annealing becomes greater. The variation obtained by treatment increases rapidly with increasing carbon.

Steel .45 in carbon showing:

Tensile Strength.	Elastic Limit.	Elongation.	Contraction of Area.
90,000	45,000	15	40%
By oil-tempering:			
96,000	55,000	18	50%

The above are about the best figures to be used in forging ordinary work. If higher or lower strength is required, it may be obtained by varying the carbon. If increased strength and elastic limit are required, without sacrificing toughness, it may be obtained by using nickel steel.

As illustrative of the advantage of the use of higher carbon steels may be cited the piston rods of steam hammers, especially those of large size, where the strains were found too severe for the softer steels to stand for any length of time, proving beyond question the value of considering the effect of the fatigue of metals, rather than a rupturing force of sudden application. In view of the above well-known facts it must seem strange that many progressive builders of steam engines still continue to use soft-steel rods as an alleged means of safety. In this instance it seems fair to congratulate the bicycle maker as the first to recognize the value of the development in the manufacture of steel, in the direction of higher carbon, with all its salient advantages, with regard to combining strength with lightness.

There is no doubt that the elements of first cost, and timidity, have deterred some from a possible progress made available to them.

The modulus of elasticity being constant in both high and low carbon steels, cases may arise in structural work where the higher steels, owing to the greater care necessary in working, with the consequent increase of cost, may offer no compensating advantage over the use of softer steels.

Having learned that the introduction of a comparatively small percentage of nickel (which was first emphasized by Mr. James Riley of Glasgow) greatly improves the qualities of steel, especially the elastic limit and contraction of area, would it be unreasonable to think that other discoveries will be made which will still further improve the quality and greatly promote the art of steel making?

When we look back—and at times it is well to survey the past—we see the marvellous changes which have taken place within the last half century in the manufacture and production of iron and steel. We have seen already what nickel will do, and note the advantageous effect which a small amount of chromium or tungsten will produce in steel for certain purposes, and the remarkable results produced by Hadfield through the introduction of manganese in varying quantities, and when we see the marvellous quieting effect produced on molten steel by the addition of an almost infinitesimal amount of aluminum, and with practical men watching with an intensity only known to one who loves his profession, for the slightest change which may take place in the art, and with the chemist at his side ready waiting to explain, and, if possible, turn them to advantage, it seems to me a justification of the views which I have taken, and leads us to anticipate great progress in the years to come.

In conclusion, the modern practice of steel making has, in the hands of the mechanical engineer, the metallurgist, and chemist, wrought wonders in producing a material which in quantity, physical qualities, and cheapness would have been regarded as utterly impossible half a century ago, when steel rails, beams, angles, and plates were not thought of, and steel was regarded as a luxury among the materials of the working artisan. The labor of the men of iron and steel have so cheapened their products that to-day we are enabled to use steel for the commonest purposes as well as for the most expensive articles produced by the skill of the mechanic. No article is too humble to be made of it, and no structure so grand and important as to refuse its services; it is demanded in the frying-pan as well as in the vast bridges and viaducts, as well in the housewife's needle as in the great leviathans which have made the ocean but a span of less than a week; thus we find steel asserting its value through every walk of life, and extending to every clime, linking lands in that bond which grows broader and stronger with the years, till even now we can see, if but dimly, on the horizon the promise of the linking of nations in the universal brotherhood of mankind, and bringing the longed-for era of eternal peace.

Fig. 20.

In their simplest form the computers consist of a foundation plate in the centre of which a disk revolves. If the formula contains four factors, the scales representing two of them are placed around the upper and lower edges of the disk, the other two being similarly placed on the plate. When there are five or six factors in the formula, an extra piece of segmental shape revolves between the disk and the plate, and on this piece are laid off two more scales. All these are arranged and combined so that the values of the known factors can be placed opposite each other, when the value of the unknown one, or the solution of the problem, is at once read off.

The material used is the best bristol board, the foundation plate being often attached to a board of wood or other strong material. Small computers are often put up in cloth or leather cases. The sizes vary from 4¼ x 5¾ to 12 x 14 inches, the larger ones being more suitable for the draughting-room or office.

One important feature which adds considerably to the value of the computers is that in problems of which many solutions are possible, all the solutions are given at once, and may be read off from the contiguous scales. This feature is well illustrated in the Strength of Gears Computer, described more at length below, which gives at once all possible combinations of pitch and face which will transmit the load; so that all that has to be done is to select suitable values for each; whereas, when solving the formula arithmetically the value of one must be assumed, from which the other is then calculated. This advantage is also illustrated by the Strength of Beams Computer, in which the scales of breadth and depth, which are contiguous, show at once all possible combinations of these, from which suitable values may be at once selected.

In laying out these instruments no attempt is made to decide upon the values of constants about which authorities differ, or which involve individual experience in selection for particular cases. For such constants a special scale is provided, covering all probable values, from which the user selects the one which accords with his judgment, precisely as though he were solving the formula in the usual manner.

As to their degree of reliability, much depends upon their size, the larger ones being, of course, more adapted to close and careful work. With such, the average error will not exceed 1 per cent. In some cases where the scales are large and open

It was not the intention of the writer to speak of matters beyond date of his own experience, but it may be of historic value and interest to know something of the early plate mills, and I will make the following brief allusion to one of them :

In 1810 Isaac Pennock built a mill near Coatesville, Chester County, Pa., and it is claimed that the first boiler plates which were made in this country were made on this mill. The plates were made from a single charcoal bloom, the bloom being made in an old-fashioned charcoal fire—pig metal. The blooms were reheated on an ordinary grate fire and rolled into plates, and were shipped without being sheared. There were no railroads in those days. Coal was hauled from Columbia, distant 36 miles. The plates were teamed to Philadelphia, 35 miles distant, and to Wilmington, 26 miles. Some of the older members of this Society will doubtless remember that in old times the boilers were small in diameter, and had narrow sheets. This came from the fact that they heated the blooms on a grate fire, and there being no reverberatory furnaces at that time in the country, could not be doubled; consequently the size of the plate was limited to the size of the bloom. The rolls were small, and short of power to drive them. This mill has been rebuilt three or four times within my recollection. To-day they have open-hearth furnaces for making steel, and can roll plates 119 inches wide and of great length. One thing is quite remarkable about these works: they have always remained in the family of Isaac Pennock, and are at this time controlled by his descendants.

NOTE BY THE SECRETARY.—Mr. Fritz illustrated the reading of this paper by a full-size drawing of the ingot lathe referred to on page 50. This drawing was mounted at the south end of the auditorium, and was too long to go even upon the thirty feet length of that wall. Two photographs were taken of the hall with the drawing in place, which are reproduced in Figs. 20 and 21.

DISCUSSION.

Mr. William Henry Jaques.—While it is not a general custom of this Society, I believe, to discuss the addresses of our Presidents, I rise to a question of privilege to acknowledge the compliment which has been paid to me to-night in relation to my connection with the development of steel in the past ten years. To have had the opportunity to assist in making this country independent of the rest of the world in the production and handling of great masses of steel, of armor and heavy ordnance, is cer-

FIG. 21.

handsome as well. (Laughter and applause.) I remember when it was announced at Johnstown in 1854 that John Fritz was coming. There was something mysterious and awe-inspiring in the name to the boy that I then was. It was so German ; it indicated so much solid learning; it was something like the feeling which I had when we first got a chemist whose name was Friel and who wore spectacles. He could even tell what there was in stones; and the chemist (like the man of whom Shakespeare tells who found sermons in stones) finds many things, good, bad, and indifferent, in stones, as there are sermons which are good, bad, and indifferent. (Laughter.)

Mr. Fritz came to Johnstown when I was a telegrapher on the Pennsylvania Railroad. I have seen the Cambria Iron Works grow under his charge, and I have known what he did there. I used to go to the mills and wonder at the massive machinery, and his paper brings back to me the experiences of those earlier days. But do you know that what staggers me is, that while it is forty years since I first saw Mr. Fritz, I find here that he looks not much less young and seemingly fully as vigorous as he looked then ? He has changed the color of his hair—evidently dyeing it gray so as to be in the fashion with me—but with that exception I do not see much difference. He is as genial as then, and, if anything, mellowed and ripened by his age. I often think that while every stage of life may have its wreath, the highest crown is reserved for the age to which our President has not yet attained indeed, though he has some relish of age upon him. It is the crown of an old age rich in the respect and honor and friendship of those who know you best. We hope, sir, that many long years will be spared to you; and while it is impossible for you to rise higher in the esteem and affection of the troops of friends who love and admire you, still you can gratify them by continuing to come in and out among us and allowing us to claim you as our friend and mentor—the Nestor of our profession and the possessor of all our hearts.

Mr. William Kent.—I hope that the President will call upon other steel engineers. Our meeting will not be complete unless we hear from both Bessemer and open-hearth engineers.

The President.—I want to call on our friend Robert Hunt, who looks like a young fellow yet. He was one of the early boys in the Bessemer business, and has done his full share in the hard work of those early days, and has earned the success which he has attained.

Mr. Robert Hunt.—My friends who know me, Mr. President, will recognize that he who has a high forehead, such as I, takes a means to avoid the dye for his hair which Mr. Carnegie accuses his friends of using. (Laughter.) But, after all, I still hope I am a boy, as Mr. Fritz has told you.

I have been quite struck with the great ability which he has shown in all directions, and with his apparent frankness and want of guile. At the same time he possesses that great Pennsylvania quality of going to the point which he desires to reach, in spite of all obstacles. A few minutes ago he told you that the way to make a good steel shaft was to take the centre out of it. Now, I remember upon a memorable occasion—and made memorable through the good efforts of that dear departed friend of ours to whose memory we will pay our tribute to-morrow—that when Mr. Leavitt was called upon to give his testimony as to Mr. Fritz's abilities as a steel maker, he pointed out that he, Mr. Fritz, had discovered that the true chemical way to eliminate phosphorus was to bore the centre out of whatever he made (laughter)—thus doing it mechanically. He is a great mechanic—not much of a chemist, but a tremendous mechanic. He started out with this little instrument (referring to Mr. Fritz's hook-tool) and he developed that (pointing to drawing of a lathe).

The President.—Show me how I held that.

Mr. Hunt.—You said it jerked you. I don't want to take any risks. (Laughter.) And he undertakes mechanically to solve the whole trouble, and I don't blame him. With the metallurgical materials with which he has had to deal I should have thought he would have built a bigger lathe. But I consider it a great privilege that to-night we have listened to this address. It is a great privilege to us of the steel world, who have done our little part in trying to accomplish something for that world, and incidentally for ourselves, to listen to the words from our master, from our teacher, and, if we were not so near the same age, I would say our father. But sometimes I think he is our stepfather. What a great stepfather he has been to many of us! And when we have had troubles and difficulties and wondered how these would be overcome, he was always ready to give us good words of encouragement and advice, and behind all that there was the one great principle from which he has never deviated, and therefore he is as he is: "Be true to yourself, then you will be true to everybody else, and no matter how the tides may seem to come against you, there will be but one thing, and that is, to you success." (Applause.)

Mr. Wellman.—Mr. President, I do not know that I can say much. But I am very glad to be here to-night. I am very glad to be here to greet our President, and very glad to have heard his paper. It takes my memory back, not a great many years ago, when as a boy down in New England I heard about Mr. Fritz and the great works he was building up in Pennsylvania. So I sat down one day and I thought I would write to him for a job. I wrote to him, but he—I have forgotten exactly what the answer was. But I didn't get the job. (Laughter.) I suppose he had so many Pennsylvania boys down there that were just as anxious as I was. But not many months ago he was good enough to say that he was very sorry that he did not give me the job.

The President.—I say that most heartily.

Mr. Wellman.—I do not know that I can add anything to what has been said. I have been very much interested—particularly interested this afternoon when I was trying to get this big lathe upon the wall, especially to bend that end of it around the corner. That was a pretty tough job. (Laughter.) I thank you, Mr. President, for giving me the opportunity to speak.

Mr. Allan Stirling.—Mr. President and gentlemen, I only wish to mention a name in connection with the mechanical engineering of the Bessemer process, and this name can very rightly be coupled with that of our respected President. My memory recalls an incident which occurred thirty years ago at Troy, New York. While at the Burden Works I received a visit from Mr. Alexander Lyman Holley and Mr. John Fritz, and I simply desire to couple those names together in speaking and thinking of the mechanical engineer and the Bessemer process. (Applause.)

The President.—I think there is another gentleman here who was one of the earliest engineers connected with the Bessemer process, but I cannot see him. Is Mr. William F. Durfee present?

Is there any other gentleman who would like to make some remarks?

If not, I should like to ask the favor of the Society for a moment. Is Mr. Ellis Kent present? I would like you to come this way, please; and Mr. Frank Johnson. (Mr. Kent and Mr. Johnson stepped forward to the platform.) We all have a great deal to say about the men who get the credit for building up

Mr. Robert Hunt.—My friends who know me, Mr. President, will recognize that he who has a high forehead, such as I, takes a means to avoid the dye for his hair which Mr. Carnegie accuses his friends of using. (Laughter.) But, after all, I still hope I am a boy, as Mr. Fritz has told you.

I have been quite struck with the great ability which he has shown in all directions, and with his apparent frankness and want of guile. At the same time he possesses that great Pennsylvania quality of going to the point which he desires to reach, in spite of all obstacles. A few minutes ago he told you that the way to make a good steel shaft was to take the centre out of it. Now, I remember upon a memorable occasion—and made memorable through the good efforts of that dear departed friend of ours to whose memory we will pay our tribute to-morrow—that when Mr. Leavitt was called upon to give his testimony as to Mr. Fritz's abilities as a steel maker, he pointed out that he, Mr. Fritz, had discovered that the true chemical way to eliminate phosphorus was to bore the centre out of whatever he made (laughter)—thus doing it mechanically. He is a great mechanic—not much of a chemist, but a tremendous mechanic. He started out with this little instrument (referring to Mr. Fritz's hook-tool) and he developed that (pointing to drawing of a lathe).

The President.—Show me how I held that.

Mr. Hunt.—You said it jerked you. I don't want to take any risks. (Laughter.) And he undertakes mechanically to solve the whole trouble, and I don't blame him. With the metallurgical materials with which he has had to deal I should have thought he would have built a bigger lathe. But I consider it a great privilege that to-night we have listened to this address. It is a great privilege to us of the steel world, who have done our little part in trying to accomplish something for that world, and incidentally for ourselves, to listen to the words from our master, from our teacher, and, if we were not so near the same age, I would say our father. But sometimes I think he is our stepfather. What a great stepfather he has been to many of us! And when we have had troubles and difficulties and wondered how these would be overcome, he was always ready to give us good words of encouragement and advice, and behind all that there was the one great principle from which he has never deviated, and therefore he is as he is: "Be true to yourself, then you will be true to everybody else, and no matter how the tides may seem

DCCII.*

SOME SPECIAL FORMS OF COMPUTERS.

BY F. A. HALSEY, NEW YORK CITY.
(Member of the Society.)

In these days of specialization most engineers have numerical problems which require to be solved in the same or similar forms over and over again. These may or may not involve difficulties and complexities, but in any case the routine soon becomes drudgery. It seems to me that I am performing a real service in calling attention to a type of computer by which such problems are solved in a twinkling, and without mental effort.

These computers are simple mechanical devices, in the nature of special circular slide rules, designed for the solution of certain more or less complicated formulas, each computer solving but the one formula (or in some special cases two) to which it is adapted. They are in this respect unlike the ordinary slide rule, which is, in a sense, a universal instrument. On the other hand, the slide rule covers only operations involving multiplication, division, squares, and square roots and their combinations, while these instruments can be made to handle any powers or roots or trigonometrical functions. Problems involving more than four factors, when solved by the slide rule, must be attacked piecemeal, whereas these computers may be made to solve at once problems containing any number of factors.

They are provided with different logarithmic scales, similar to those on the slide rule, but with the important difference that each scale represents one definite factor in the formula, and is made sufficiently long to cover all probable values of that factor, so that positive quantities as 8, 80, 800, etc., are read off without chance of error, thus overcoming the slide rule difficulty of locating the decimal point.

---

* Presented at the New York meeting (December, 1896) of the American Society of Mechanical Engineers, and forming part of Volume XVIII. of the *Transactions*.

In their simplest form the computers consist of a foundation plate in the centre of which a disk revolves. If the formula contains four factors, the scales representing two of them are placed around the upper and lower edges of the disk, the other two being similarly placed on the plate. When there are five or six factors in the formula, an extra piece of segmental shape revolves between the disk and the plate, and on this piece are laid off two more scales. All these are arranged and combined so that the values of the known factors can be placed opposite each other, when the value of the unknown one, or the solution of the problem, is at once read off.

The material used is the best bristol board, the foundation plate being often attached to a board of wood or other strong material. Small computers are often put up in cloth or leather cases. The sizes vary from 4¼ x 5¾ to 12 x 14 inches, the larger ones being more suitable for the draughting-room or office.

One important feature which adds considerably to the value of the computers is that in problems of which many solutions are possible, all the solutions are given at once, and may be read off from the contiguous scales. This feature is well illustrated in the Strength of Gears Computer, described more at length below, which gives at once all possible combinations of pitch and face which will transmit the load; so that all that has to be done is to select suitable values for each; whereas, when solving the formula arithmetically the value of one must be assumed, from which the other is then calculated. This advantage is also illustrated by the Strength of Beams Computer, in which the scales of breadth and depth, which are contiguous, show at once all possible combinations of these, from which suitable values may be at once selected.

In laying out these instruments no attempt is made to decide upon the values of constants about which authorities differ, or which involve individual experience in selection for particular cases. For such constants a special scale is provided, covering all probable values, from which the user selects the one which accords with his judgment, precisely as though he were solving the formula in the usual manner.

As to their degree of reliability, much depends upon their size, the larger ones being, of course, more adapted to close and careful work. With such, the average error will not exceed 1 per cent. In some cases where the scales are large and open

DCCII.*

SOME SPECIAL FORMS OF COMPUTERS.

BY F. A. HALSEY, NEW YORK CITY.
(Member of the Society.)

In these days of specialization most engineers have numerical problems which require to be solved in the same or similar forms over and over again. These may or may not involve difficulties and complexities, but in any case the routine soon becomes drudgery. It seems to me that I am performing a real service in calling attention to a type of computer by which such problems are solved in a twinkling, and without mental effort.

These computers are simple mechanical devices, in the nature of special circular slide rules, designed for the solution of certain more or less complicated formulas, each computer solving but the one formula (or in some special cases two) to which it is adapted. They are in this respect unlike the ordinary slide rule, which is, in a sense, a universal instrument. On the other hand, the slide rule covers only operations involving multiplication, division, squares, and square roots and their combinations, while these instruments can be made to handle any powers or roots or trigonometrical functions. Problems involving more than four factors, when solved by the slide rule, must be attacked piecemeal, whereas these computers may be made to solve at once problems containing any number of factors.

They are provided with different logarithmic scales, similar to those on the slide rule, but with the important difference that each scale represents one definite factor in the formula, and is made sufficiently long to cover all probable values of that factor, so that positive quantities as 8, 80, 800, etc., are read off without chance of error, thus overcoming the slide rule difficulty of locating the decimal point.

---

* Presented at the New York meeting (December, 1896) of the American Society of Mechanical Engineers, and forming part of Volume XVIII. of the *Transactions*.

In their simplest form the computers consist of a foundation plate in the centre of which a disk revolves. If the formula contains four factors, the scales representing two of them are placed around the upper and lower edges of the disk, the other two being similarly placed on the plate. When there are five or six factors in the formula, an extra piece of segmental shape revolves between the disk and the plate, and on this piece are laid off two more scales. All these are arranged and combined so that the values of the known factors can be placed opposite each other, when the value of the unknown one, or the solution of the problem, is at once read off.

The material used is the best bristol board, the foundation plate being often attached to a board of wood or other strong material. Small computers are often put up in cloth or leather cases. The sizes vary from 4¼ x 5¾ to 12 x 14 inches, the larger ones being more suitable for the draughting-room or office.

One important feature which adds considerably to the value of the computers is that in problems of which many solutions are possible, all the solutions are given at once, and may be read off from the contiguous scales. This feature is well illustrated in the Strength of Gears Computer, described more at length below, which gives at once all possible combinations of pitch and face which will transmit the load; so that all that has to be done is to select suitable values for each; whereas, when solving the formula arithmetically the value of one must be assumed, from which the other is then calculated. This advantage is also illustrated by the Strength of Beams Computer, in which the scales of breadth and depth, which are contiguous, show at once all possible combinations of these, from which suitable values may be at once selected.

In laying out these instruments no attempt is made to decide upon the values of constants about which authorities differ, or which involve individual experience in selection for particular cases. For such constants a special scale is provided, covering all probable values, from which the user selects the one which accords with his judgment, precisely as though he were solving the formula in the usual manner.

As to their degree of reliability, much depends upon their size, the larger ones being, of course, more adapted to close and careful work. With such, the average error will not exceed 1 per cent. In some cases where the scales are large and open

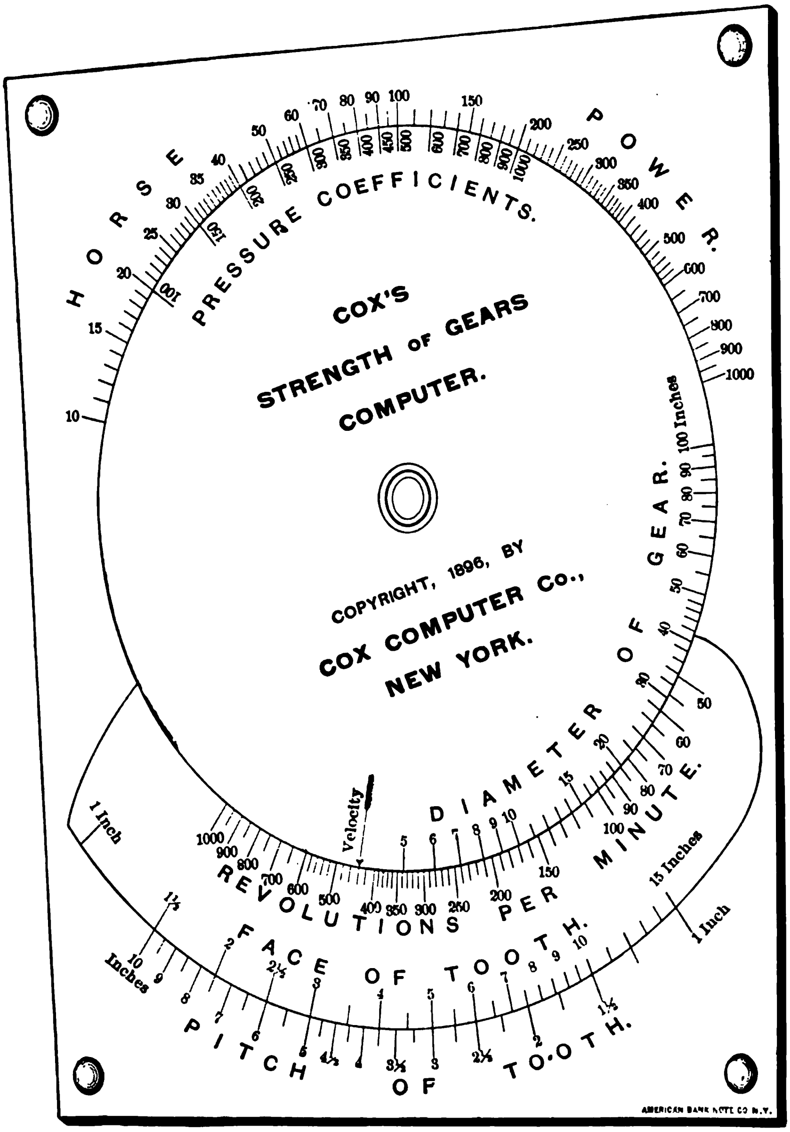

Fig. 22.

this becomes reduced to $\frac{1}{8}$ of 1 per cent. But as such decimal refinements do not in practice enter into sizes of pipes, dimensions of beams, etc., the computers can be relied upon to solve their respective formulas within all needed limits.

Computers have been made to solve some fifty different formulas, of which the Strength of Gears Computer may be taken as an example (Fig. 22).

A formula much employed to ascertain the strength of gears is

$$W = cpf,$$

which may be made to read,

$$\text{H.P.} = c\,\frac{p \times f \times d \times r}{126{,}050};$$

in which

W = working load in pounds,
p = circumferential pitch in inches,
f = width of face in inches,
d = diameter on pitch line in inches,
r = revolutions per minute,
c = a coefficient representing the safe working pressure exerted on the teeth of a wheel one inch pitch and one inch face.

The coefficient c is one which, as stated above, is not determined in the design of the computer; but a scale ranging between 100 and 1,000 is provided, from which the user of the computer makes a selection in accordance with the kind of tooth, material, workmanship, speed, or his own judgment.

The Strength of Gears Computer solves the above formula, and the manner of using it is as follows :

TO FIND THE HORSE-POWER A GEAR WILL TRANSMIT.

1. Set the face of the tooth to its pitch ;
2. Bring the pitch diameter to the revolutions of the gear ;
3. Opposite the selected pressure coefficient find the horse-power the gear will transmit.

TO FIND THE PITCH AND FACE OF TOOTH TO TRANSMIT A GIVEN HORSE-POWER.

1. Select a pressure coefficient and place it opposite the given horse-power.
2. Hold the disk and set the segment to bring the revolutions opposite the diameter.
3. Find the required pitch opposite the face which goes with it. All coinciding lines of face and pitch scales give teeth of the same strength, and from them a tooth having the desired ratio of face to pitch may be selected.

The Strength of Gears Computer is shown in the engraving, set for the solution of the following problem:

Required the dimensions of the teeth of a gear 24 inches diameter to transmit 40 horse-power at 70 revolutions:

Assume $c = 200$.

Set 200 of the pressure coefficient scale opposite 40 of the horse-power scale. Set 70 of the revolution scale opposite 24 of the diameter scale.

Now we find, coinciding with one another on their respective scales:

Face................	5 inches,	6 inches,	7½ inches,	etc.
Pitch................	3 "	2½ "	2 "	

All of which will do the work required, and from which a selection may be made.

We also see that the same power would be transmitted by the same tooth on gears of the following diameters and speeds:

Diameter...	14 inches,	16 inches,	28 inches,	etc.
Revolutions per minute..	120	105	60	

These results illustrate the advantage of the instrument over arithmetical computation in setting before the eye at once all possible solutions of the problem.

On the lower edge of the disk an arrow labelled "velocity" will be seen, from which we see at once that the velocity at the pitch line is 440 feet per minute, the figures of the revolution scale, for this purpose, reading as feet.

DCCIII.*

EXPERIMENTAL INVESTIGATION OF THE CUTTING OF BEVEL GEARS WITH ROTARY CUTTERS.†

BY FORREST R. JONES AND ARTHUR L. GODDARD, MADISON, WIS.
(Member of the Society.) (Non-Member.)

THE usual method in shops which do not make a business of cutting bevel gears is either to run several trial cuts and test the gears until they mesh satisfactorily, or to file the teeth. While such "cut and try" methods may produce teeth whose outlines are more nearly the correct form for bevel-gear teeth than those of teeth formed with two cuts, very frequently they do not, and the extra time required for such operations is generally time wasted.

The operations in detail required to cut bevel gears with rotary cutters in a milling or similar machine are as follows: After the gear blank is set so that its axis lies in the median plane of the cutter and at the proper angle of elevation, cuts are run through it to rough out two or more of the spaces between the teeth; the middle of the tooth and its thickness are then marked on the pitch circle of the large end; the gear blank is then revolved through a small angle, less than that of a single pitch, and the table moved sidewise until the side of the cutter passes through one of the pitch points marking one side of the large end of the tooth, and a cut is taken on one side of all the teeth. The blank is then revolved an equal amount on the opposite side of its original position, and the table shifted to correspond, after which a cut is taken on the unfinished sides of the teeth, thus completing the gear.

The only uncertainty in these operations is that of revolving the blank from its original or central position through such an

---

* Presented at the New York meeting (December, 1896) of the American Society of Mechanical Engineers, and forming part of Volume XVIII. of the *Transactions*.

† Abstract of a thesis presented by Mr. Goddard for the degree of B.S. in Mechanical Engineering.

angle that the cutter shall pass through the pitch point of the larger end of a tooth, and at the same time cut just enough off the smaller end to allow the gear to mesh with its mates without further dressing of the teeth.

A study of the problem led to the supposition that the amount a gear must be thus revolved could be expressed in terms of the pitch, the coefficient being a variable depending upon the centre angle of the gear, which is here taken as the angle between an element of the pitch cone and the axis of the gear. It was also thought that this angle through which the gear must be revolved must be independent of the pitch of the gear; for, with a given pitch cone to be provided with a certain number of teeth, any pitch may be given to the resulting gear by selecting the base of the pitch cone at the proper distance from its apex to give the gear the required pitch diameter, since the pitch diameter of a bevel gear is measured on the larger end of the gear. And it is obvious that the setting which will answer for cutting a gear taken from one part of this cone will answer for cutting a gear taken from any other part; yet the two gears would be of different pitches.

In order to determine the proper setting for gears of different centre angles, the following apparatus was constructed and used experimentally.

In Fig. 23 the vertical rod *A* serves as the axis of a gear; the sleeve *B* may be revolved upon and moved up and down *A*, and clamped in any desired position by means of the set-screw shown; the split collars *C* and *C'* may be turned or moved to any desired position upon *B;* these collars carry smooth rods *E* and *E'*, on which the brackets *D* and *D'* may be moved and clamped wherever wanted; upon *D* and *D'* are clamped the outlines of the outer and inner ends of the space between two teeth of an involute bevel gear. The outline of a segment of a bevelled gear of any desired centre angle or pitch may thus be constructed. *T* is the outline of a cutter templet drawn upon stiff cardboard; it is clamped to the bracket *F*, free to slide along the rod *J*, which is splined to receive a key attached to *F; F* is rigidly fastened to the horizontal shaft *H*, which is free to turn in its bearings *G* and *G'; J* may be fixed at any desired angle by clamping upon *H* the dog *K*, one end of which swings down against a flat plate *M;* the shaft *H* may be moved endwise in its bearings, which movement corresponds to the lateral motion of the table of a milling machine, except that in this case the work is stationary and the cutter is shifted.

The operation of the machine was as follows: The outlines of the outer and inner ends of a tooth space of a bevel gear of one inch pitch and fifty teeth, were drawn by the approximate method as given in Brown & Sharpe's "Treatise on Gearing." The outline of a cutter templet was drawn upon stiff cardboard, the curve being the same as that of the space at the large ends of the teeth. Pitch circles and median lines were drawn upon all the cards. Fig. 24 shows two sets of templets for bevel

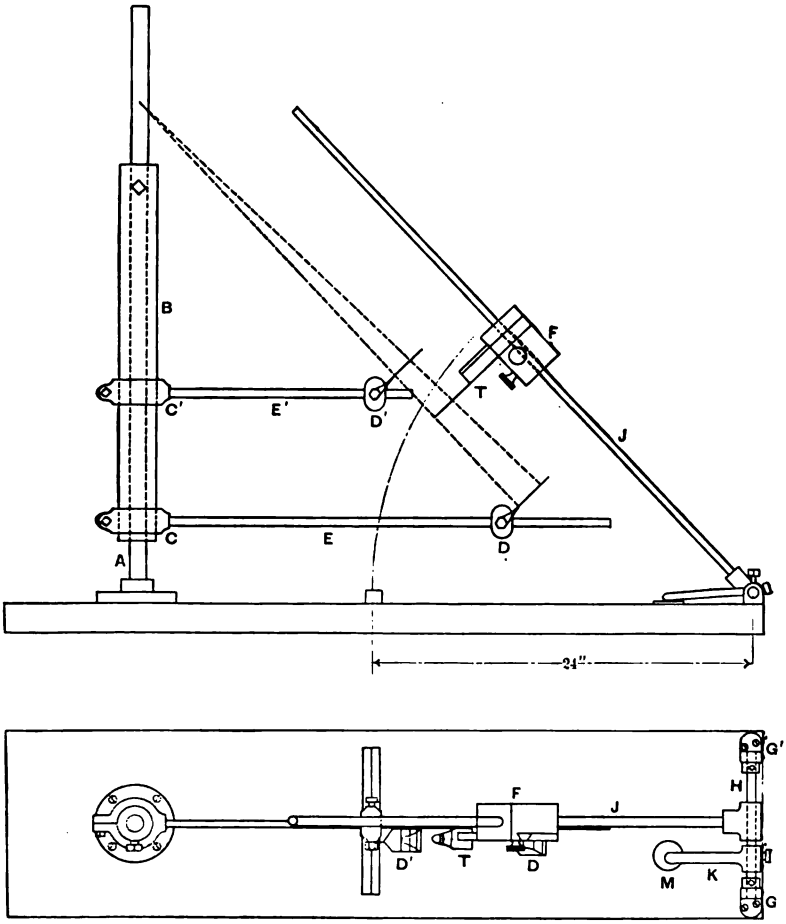

Fig. 23.

gears having centre angles of 22 degrees and 52 degrees respectively, and fifty teeth each. The rod *J* was set parallel to an element of the pitch cone of the gear. This was done by calculating, for a 24-inch radius, the chord of the complement of the centre angle, and measuring the length of chord thus determined with a steel tape from points on *J* and on the base 24 inches from the axis at *G*, as shown. Then the plates at *D* and *D′* were set perpendicular to *J*, and the space templets clamped on. The positions of these templets were determined by measuring the radii of the pitch circles from *A*, and making the distance between the two templets one-third the slant height of the pitch cone. The two templets were brought into alignment by sighting across two threads, one stretched along the base of the machine, and the other stretched from the top of *A* to the top of *J*, care being taken first to see that *J* was in proper alignment with *A*. The cutter templet was then clamped to the slide *F*, and the inclination of *J* was changed to that of the cutting angle. This was determined by adjusting until the lower edge of the cutter templet would pass through the circles marking the bottom of the space at both ends of the tooth. A hole cut in the middle of the cutter templet, as shown in Fig. 24, allowed the coincidence of the median lines to be determined. This completed the operation of setting up the machine. Next the sleeve *B* with its attachments was revolved through a small angle, and the shaft *H* was slid along in its bearings until the edge of the cutter templet passed through the pitch point marked *O* in Fig. 24. The slide *F* was then moved along until *T* rested upon the inner space templet. The rod *J* was swung up to allow moving the slide past *D′*, and as the dog *K* came down upon the flat plate the rod would come back to its original position when lowered. The amount of revolution was ascertained by marking through the hole in the cutter templet upon the pitch line of the outer card and measuring the distance of this mark from the median line drawn on this card. This was then reduced to decimals of a pitch.

It was at first considered necessary to revolve the gear enough to have the edge of the cutter templet pass through the outer pitch point *O* and the corner of the top of the inner end of the tooth; but, as may be seen from Fig. 24, curve *P*, on gears of small centre angle this cut the root of the tooth away considerably. It was then considered advisable to revolve the lateral motion of the table of a milling machine, except that in this case the work is stationary and the cutter is shifted.

The operation of the machine was as follows: The outlines of the outer and inner ends of a tooth space of a bevel gear of one inch pitch and fifty teeth, were drawn by the approximate method as given in Brown & Sharpe's "Treatise on Gearing." The outline of a cutter templet was drawn upon stiff cardboard, the curve being the same as that of the space at the large ends of the teeth. Pitch circles and median lines were drawn upon all the cards. Fig. 24 shows two sets of templets for bevel

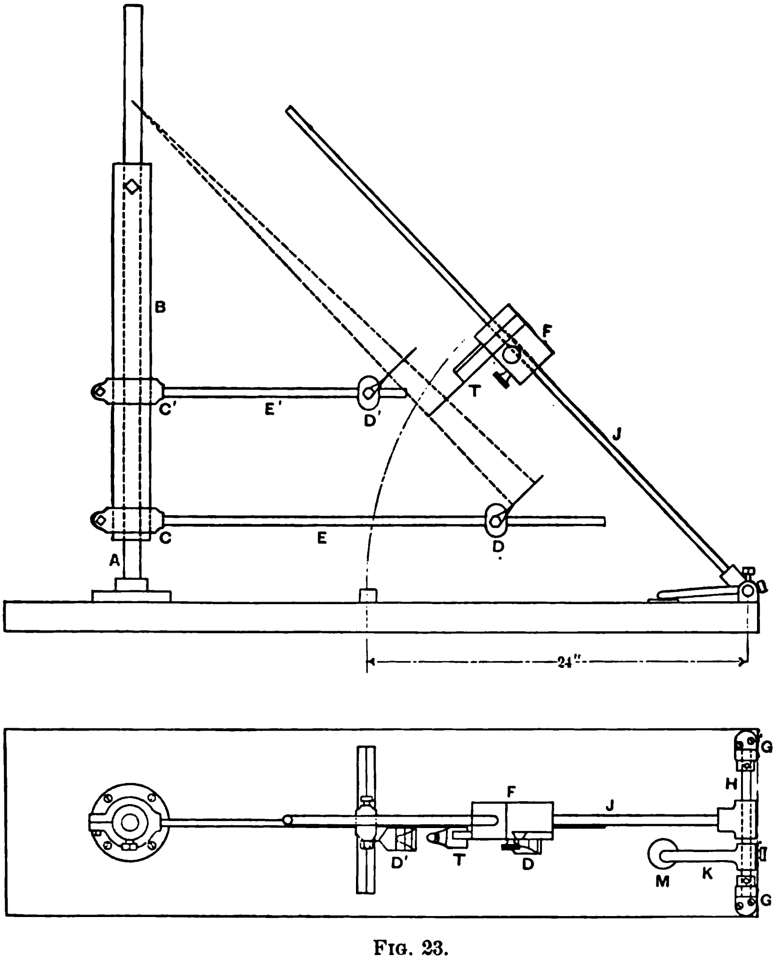

FIG. 23.

noticed that as the centre angle increased, less stock was left on the top of the tooth at the inner end, and less was taken off at the root. This is shown in Fig. 24; on the space templet for the small end of the space for the gear of 22 degrees centre angle, the line marked *T* indicates the true outline of the space; the line marked *M* indicates the outline of the space as it would be when cut if the gear were set so that the cutter left as much stock on the inner end of the tooth at the top as it took off at the root; and the line marked *P* indicates the outline of the tooth as it would be when cut if the gear were set so that the edge of the cutter would pass through the corner of the tooth at the top of the inner end. On the templet for the inner end of the space for a gear of 52 degrees centre angle, the lines marked *T* and *M* indicate corresponding features of the tooth; but here the lines almost coincide. This shows how much more nearly correct gears of large centre angles are when cut with rotary cutters than those of small centre angles. This is because the circles upon which the teeth are developed grow greater in proportion to the pitch circles of the gears as the centre angle increases; hence the involute outlines of the teeth approximate more closely to a straight line, and there is consequently less difference of curvature between the two ends of the teeth.

The greater variation from the correct outline in the gears of small centre angles, as shown by the curves *T* and *M* in Fig. 24, would be still more marked were it not for the fact that when a gear of small centre angle rotates through any given angle, a point on its pitch circle (at either end of the teeth) passes through a greater portion of the circle upon which the teeth are developed than it does for a large centre angle; therefore, for a given amount of rotation about its axis, a tooth of a small centre-angled gear has a greater angular rotation about its centres of development than one of a large centre angle. (The centre of development is taken as the intersection of the axis of the gear with a line normal to the surface of the pitch cone at the same distance from its apex as the section of the tooth under consideration.) This greater rotation about the centre of development causes more metal to be removed from near the top of the tooth of the gear having a small centre angle.

The difference of effect upon the inner ends of the teeth would prevent the extra thick points of the teeth of small centre angles gear so that the cutter left nearly as much at the top of the tooth at the inner end as it took off at the root. The settings which would produce this result were determined for a number of gears of centre angles varying, by steps of 4 degrees, from 18 degrees to 52 degrees. At the same time the settings which would cause the edge of the cutter to pass through the outer pitch point *O* and the corner of the top of the inner end of the tooth were determined. The former series of settings, indicated by *X* in Fig. 25, seemed to require a revolving of the gear through about .15 of a pitch for any centre angle of 18 degrees and upwards; and the latter series, indicated by ⊙, seemed to require a revolving through about .13 of a pitch. But it was

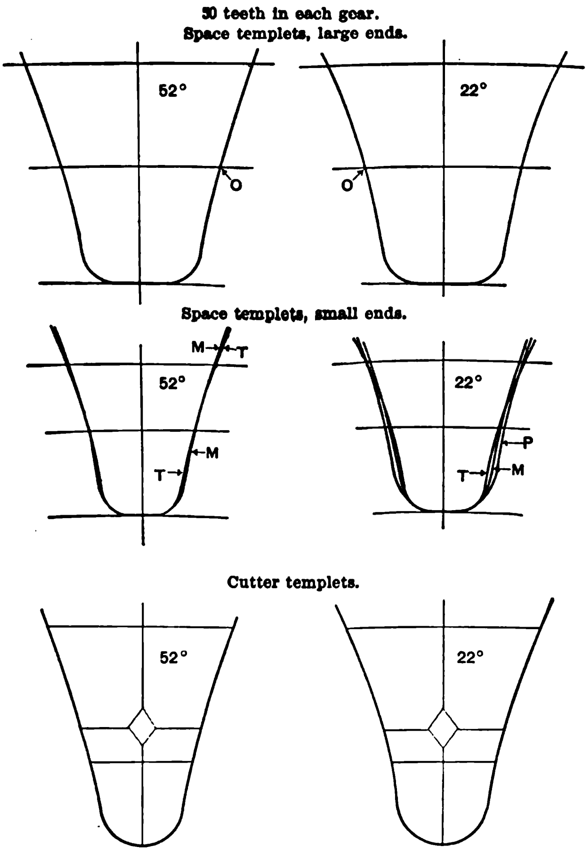
30 teeth in each gear.
Space templets, large ends.
Space templets, small ends.
Cutter templets.

Fig. 24.

The 7-pitch gears of 16 and 36 teeth and the 6-pitch gears of 20 and 30 teeth had faces ¾ of an inch long, which is about one-quarter of the slant height of the pitch cone, as those were the dimensions for which the cutters were designed. The shaded parts of Fig. 26 show how the bearing surfaces were distributed along the sides of the teeth of these gears. The 7-pitch gears of 28 and 48 teeth had a length of faces also about one-quarter of the slant height of the pitch cone; but in this case the faces of the teeth were 1¼ inches long. The bearing surfaces of the teeth of these gears were distributed similarly to those shown in Fig. 26. The 10-pitch mitre gears of 32 teeth had faces 1 inch long, which is about .44 of the slant height of the pitch cone.

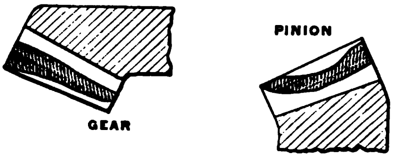

FIG. 26.

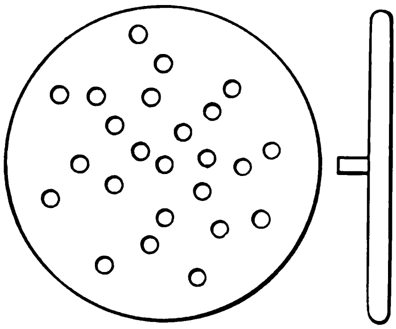

FIG. 27.

The bearing surfaces of these gears were distributed similarly to that shown for the pinion in Fig. 26.

The exact setting desired cannot usually be obtained on the ordinary dividing head of a milling machine, so the spacing device shown in Fig. 27 was made. It is a circular plate ⅛ of an inch thick, with a pin in the centre which fits in the holes of the index plate of the dividing head of the gear-cutting machine, and has a series of holes of the size of those in the index plate, arranged in a spiral. The required partial revolution of the gear to obtain the correct setting is reduced to decimals of a revolution of the index plate. Suppose this requires .125 of a revolution of the index plate, as was the case with the gear of 48 teeth. The index plate used had 20 holes in the outer row, which makes two and one-half of its spaces correspond to the required .125 revolution. Therefore the pin on the spacing plate was inserted in the hole in the index plate second from the one in from entering the spaces of gears of larger centre angles with which they are to run. It was deemed best to cut the gears of larger centre angles as nearly correct as possible, and to cut the gears of smaller centre angles to mesh with them. A curve was drawn, therefore, between the two series of settings which had been determined, which, it was thought, would give this result. This curve is shown by the heavy line in Fig. 25. Then four pairs of gears were cut with Brown & Sharpe's involute bevel-gear cutters, according to the settings indicated by this curve. The gears were: 6 pitch, 20 and 30 teeth, centre angles 33⅔ degrees and 56⅓ degrees; 7 pitch, 16 and 36 teeth, centre angles 23¼ degrees and 66¾ degrees; 7 pitch, 28 and 48 teeth, centre angles 30¼ degrees and 59¾ degrees; and 10 pitch, 32 teeth, centre angles 45 degrees. The settings were:

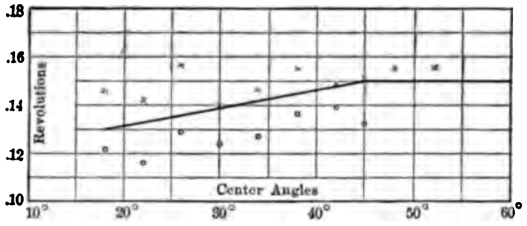

FIG. 25.

Centre angle 23¼ degrees; revolved .135 circular pitch.
" " 30¼ " " .139 " "
" " 33⅔ " " .141 " "
" " 45 " " .150 " "
" " 56⅓ " " .150 " "
" " 59¾ " " .150 " "
" " 66¾ " " .150 " "

These gears all meshed to the correct depth and ran with the bearing surface extended the whole length of the tooth. At a speed of about 400 feet per minute at the periphery, the gears with the greatest velocity ratio rattled considerably; but this must always be the case with such gears cut with two cuts, if the bearing is to be distributed along the whole length of the teeth. If it is more desirable to have the gears run quietly than to bear the whole length of the teeth, then they should be revolved less from the central position, thus allowing more to be cut from the inner ends of the teeth, which would leave the bearing almost altogether at the outer ends.

DCCIV.*

THE WASHING OF BITUMINOUS COAL BY THE LUHRIG PROCESS.

BY J. V. SCHAEFER, CHICAGO, ILL.
(Member of the Society.)

THE composition of fuel is a matter so vitally connected with all commercial and manufacturing industries, that the removal of the impurities in coal has been made a subject of much study and experimental work. Before giving a detailed description of the latest plant built on the Luhrig system the writer desires to consider briefly the nature of these impurities, the means to be employed to remove them, and the advantages of the cleaned coal.

The principal impurities in coal which it is desired to remove are ash in the form of slate, and bone coal, and sulphur in the form of pyrites. The larger pieces of slate, bone, and pyrites can be removed by hand picking. Fortunately, all these materials have a specific gravity greater than that of pure coal. It is therefore possible to remove these elements from the small coal by using water in such a way as to float off the coal, which is lighter, leaving the slate, bone, and pyrites to settle. This is the process called washing.

The incombustible matter in coal generally consists of silicate of alumina and oxide of iron. In blast furnaces the oxide of iron is reduced, but when present in fuel used for generating steam it forms into clinkers on the bars of the furnace grate, resulting in great loss.

Coal ashes often contain about 90 per cent. of silicate of alumina. The proportion of silica to alumina is generally ¾ to 2. The latter proportion generally exists in coal with a high percentage of ash. This silicate is almost infusible, and in

---

* Presented at the New York meeting (December, 1896) of the American Society of Mechanical Engineers, and forming part of Volume XVIII. of the *Transactions*.

which the locking pin of the dividing head had been inserted, and then the index plate was turned till the locking pin entered the proper hole in the spacing plate, which, of course, in this case, was at a distance from the centre pin of the spacing plate equal to one-half of the space between consecutive holes of the 20-hole row of the index plate.

10 per cent. of ash in the coke will therefore be 3.7 cwt., consisting of 2.5 cwt. ashes plus 1.2 cwt. lime.

	Cwt. Units.
The fusion of 3.7 cwt. of slag requires, according to Bell, 3.7 × 550 = ...	2,035
To expel the carbonic acid from 2.2 cwt. of limestone requires 2.2 × 370 =	814
To decompose 0.264 cwt. of carbonic acid of the limestone requires 0.264 × 3,200 = ...	845
Total cwt. heat units........	3,694

Taking 4,400 as the number of units developed by 1 cwt. of carbon in the blast furnace, the above will represent $\frac{3694}{4400} = 0.84$ cwt. of carbon.

The carbon, therefore, in the inferior coke must be $20.24 + 0.84 = 21.08$, instead of 20.24 cwt. Consequently, the coke required with 15 per cent. of ash will be 82 : 100 : : 21.08 : 25.7 cwt., or 3.7 cwt. coke, for every ton of iron produced, more than coke with only 5 per cent. of ash, or about 17 per cent. of coke extra.

To this loss must be added the cost of 2¼ cwt. of limestone, which would of itself more than cover the cost of washing. It is evident, therefore, that a great saving can be effected by washing coal to be used for metallurgical purposes.

Connelsville coal contains 0.53 per cent. of sulphur. It is considered that any coal which contains in the coke made from it more than 1 per cent. of sulphur is not fitted for blast-furnace use. As many coking coals do contain more than 1 per cent. of sulphur, it is in these cases absolutely necessary to wash them carefully if they are to be made into coke for blast-furnace use.

The table here given shows a few results which have been obtained by washing coals from different sections of this country, and is interesting in that it shows to what extent ash and sulphur may be removed from coal:

No.	LOCATION.	ASH.		SULPHUR.	
		Unwashed.	Washed.	Unwashed.	Washed.
		%	%	%	%
1	Sloss, Birmingham, Ala........	10.00	5.80	2.65	1.92
2	Sopris, Sopris, Col............	22.48	7.20	0.95	....
3	Big Muddy, Carterville, Ill....	14.25	4.50	1.14	0.97
4	Blossburg, Birmingham, Ala...	7.68	4.60	2.29	1.48
5	Mary Lee, Birmingham, Ala...	10.32	6.14	0.89	0.71
6	Belt, Montana................	29.69	7.35	4.32	2.40
7	Toluca, Toluca, Ill............	18.61	4.92	4.02	2.49
8	Brazil, Brazil, Ind.............	24.32	5.67	....	....
9	Rogers, Lisbon, O....	12.78	4.90	3.14	1.27
10	Alexandria, Greensburg, Pa. .	10.60	5.00	1.14	0.62
11	Cherry Valley No. 3, Leetonia, O	9.88	5.00	3.83	1.72
12	Comox, Union Bay, B. C......	35.50	8.50	2.15	1.30
13	Sand Coulee, Montana.........	25.59	7.25	4.24	1.87
14	Cokedale, Montana............	31.00	5.40	....	....
15	Athens, Ohio..................	14.28	6.33	....	....

In a properly conducted washing operation as practised under the Luhrig system, nothing essential to coking is lost. In some of the less thorough systems—if indeed they may at all be called *systems*—a considerable amount of bituminous matter and pure coal is lost. These losses, however, are inexcusable, and should not be charged to coal washing in general.

Again, the cost of manufacture of coke from dirty coal is greater than that of coke from clean coal. Let us assume that the coal contains 10 per cent. of removable ash. As the price of the coke is proportionate inversely to its percentage of ash, it is necessary in this case to maintain a coking plant one-tenth larger than if the coal was washed, in order to produce the same money equivalent.

All that has been stated above applies with almost equal force to coal used under a boiler for generating steam. In the process of burning, the iron, sulphur, etc., in the *removable* dirt, together with the *fixed* incombustible matter in the coal, melt together and form a vitrified mass on the grate bars, called clinker. This greatly impedes the passage of air between the bars and causes imperfect combustion. Moreover, when the bars are covered with a firmly adherent mass of clinker they are no longer cooled by a current of cold air, and so become heated, and "burn out." To compensate for these losses an extra amount of fuel must be provided, the cost of which, and the cost of removing the ash and repairing grate bars, are items that make the desirability of washing very apparent.

The cost of transportation on a dirty coal is also an element well worth considering. In a coal having 18 per cent. ash there is probably 10 per cent. that might have been left at the mine by a process of washing. In many cases as high as 70 per cent. of the price a consumer pays for coal goes for railroad transportation; 7 per cent., therefore, of the price the consumer pays goes for transporting the very thing he doesn't want—a product worse than useless, as it spoils his fire, burns out his grate bars, and costs money to haul away from his ash pit. As this 10 per cent. of removable ash can be washed out at the mine at a cost of two to five cents per ton, the transportation charges on it alone will pay for the cost of washing and the shrinkage in volume due to washing. As this washed coal will have 11 per cent. greater calorific power the consumer can pay such a price for it as will leave a liberal margin of profit for both consumer and producer. This readily accounts for the fact that wherever it has been introduced washed coal has found a ready market. Parties who once try it are nearly always converted to its continued use.

A thorough system of washing involves the careful separation of the coal into different sizes—No. 1 and No. 2 nut, No. 3 and No. 4 pea, and sludge. It is a universally accepted fact that the best results are obtained by using coal of a uniform size. Therefore the smaller sizes of washed coal often make a much better fire than the run-of-mine or lump coal that has previously been used at a higher price. The much higher efficiency of an evenly graded nut coal over lump coal and the increasing use of mechanical stokers are facts which, in the writer's opinion, will soon compel the coal producer to prepare his steam coal for the demands of the market by crushing and washing. By using the sludge or *intermediate product* (this term will be fully explained later) it is often possible for a mine operator to use under his own boilers the product for which he has no market, and sell or coke all the remainder.

Freight charges and low prices for small coal often combine to produce conditions where the slack coal becomes a very troublesome affair. It cannot be sold, so that it must be hauled to the dump at a cost of considerable money, and often it becomes even there an intolerable nuisance by its firing and clogging streams. In many cases where these conditions exist, a washing plant will convert this expensive slack pile into a marketable product which will make a showing on the other side of the ledger.

Again, much small coal is often left in the mine because it does not pay to hoist it. This, of course, means just so much of the coal territory made unproductive. It has been found profitable to hoist this and, by washing, make of it a marketable coal.

The washing of coal is, properly speaking, a process, not a single operation. There is involved in it such an arrangement of various elevators, conveyors, jigs, etc., etc., with respect to their individual and related uses and to their environment that they will work in harmony with each other and handle coal and water to the best advantage.

For fuel purposes coal must not be broken into fine pieces more than is unavoidable. To this end bar screens and all dumps which tend to break the coal should be avoided, and in their places should be used shaking screens and rotary dumps. The pit cars should be dumped into a hopper at the head of the screen in such a manner as to allow the coal to flow gently on to the upper end of the shaking screen. On this screen the hand picking can be done.

For coking coal it is usually necessary to put in crushers and disintegrators. This is especially true of those coals that are low in volatile matter. When the coal must be reduced to a fine state before coking it should be *washed first and disintegrated afterward.* The reason for this will be fully explained below in the description of a Luhrig coking-coal washery. If all the product of the mine is coked, and the slate and pyrites occur in large pieces in the lump and egg-coal sizes, these sizes should be hand-picked before going to the breaker, where they are broken to nut-coal size before going to the washer.

All water that has been used should be clarified so as to be used over again. As it takes about a ton of water to wash a ton of coal, there are few localities where it is possible to obtain a sufficient quantity of water to allow it to flow away after being used. Indeed, when it is possible to do this it is not desirable, for the reason that much coal is thus lost, and the damage done to streams by the deposits of fine coal and refuse are apt to cause expensive litigation. The water carrying fine coal should be allowed to settle, the clarified water being used over again, and the fine coal or sludge being saved for coking or for use under the boilers. The water carrying refuse should be treated in the same way, and the refuse, drained of its water, dumped on a pile on the mine property. When these precautions are observed a very small stream of fresh water, usually not over 2½-inch pipe, suffices for washing purposes.

The perfection of the process of coal washing is due almost entirely to the efforts made in this direction by Mr. Carl Luhrig, of Germany; but others have labored in this line, and it will be of value in getting an understanding of the perfection of the Luhrig system to review in a cursory manner some of these other efforts before passing on to the description of a Luhrig washery.

Among mechanical appliances for the washing of coal probably the most primitive consists of a long wooden trough divided by low cross dams at intervals. This sluice is given such an inclination that the water has sufficient force to float the coal over the dams, while the heavier pieces of slate and pyrites are retained and removed at intervals with a rake.

Another appliance consists of an inverted cone-shaped receptacle. Water is forced into this tub near the apex at the bottom, and flowing out at the top it floats over the coal, allowing the slate and pyrites to settle and be removed at intervals by means of valves. In order to facilitate the separation, stirring-arms are put in the tub to keep the water and coal agitated, and so aid the separation.

A percussion table has been used with some success. It consists of a shallow wooden chute or table about eight feet long and three feet wide with sides six inches high. This is made slightly concave upward and suspended by rods in an almost horizontal position. The bottom consists of a sheet of galvanized iron; above this, about one inch clear, is a false bottom made of wooden riffles. These riffles are placed close together, with a space of one-thirty-second inch between, and have their upper edges, pointing toward the higher end of the table, sharpened by the insertion of a piece of sheet metal. This table is allowed to fall forward, and then is thrown back violently against a bumping post. As the coal and water in a mixed stream flow on to the higher end of this table, the upward bumping action throws the heavier particles, which settle down so the riffles can act on them, up and off the higher end of the table, while the clean coal and water flow off the lower end. The receptacle between bottom and false bottom being filled with water, aids the separation and allows the removal of the finer refuse.

All of these appliances have been used with some success, but they are all wasteful of coal and water, their results on different coals cannot be assured in advance with any reasonable degree of certainty, and they have never been developed into any complete system. Nothing but a running stream will supply the trough washer with water. The inverted cone is tolerably effective with the larger sizes of coal, but inefficient in dealing with smaller sizes and dust. The percussion table requires such careful watching to keep the supplies of coal and water balanced that it is very difficult to keep regulated. The form of the table also requires changing to suit different coals, and as this can only be determined by actual experiment the installation of such a plant proves very troublesome.

By far the best results that have been obtained have been reached by means of various forms of the old Hartz ore jig. The jig consists in general of a box divided vertically into two compartments from the top to a point below the water line. In one of these compartments a plunger plays up and down. The other compartment is closed near its bottom by a screen. Coal is placed continuously on the screen near the partition and water is forced into the back of the other compartment below the plunger. The action of the plunger imparts a pulsating motion to the water, which, acting upward through the meshes of the screen, lifts the lighter parts, allowing the coal to flow out of the front of this compartment near the top, while the slates pass out at a point lower down.

Mr. Luhrig conceived the idea of using pieces of broken feldspar on the screen when fine coal is to be washed. This has proven very successful on fine coal. The refuse which in this case passes out of the bottom of the jig has to pass through the interstices of the feldspar in a tortuous way, and the pulsating water has thus abundant opportunity to act on the mass and lift out the lighter particles of coal.

These jigs have been made in various ways, represented in this country by the so-called Diescher, Stutz, and Stein washers, all the same in principle, but differing in essential details from the Luhrig jigs. *It must be kept in mind, however, that success in coal washing does not depend so much on individual machines and appliances which can be made in any good machine shop as it does on the process and the system upon which the whole plant has been built and is operated.* The nature of the coal must in every case be taken into account, the purposes for which it is to be used, and the plant designed accordingly. It follows that every plant is different, and imitation of previously carried out plans is generally faulty and disappointing. It is therefore advisable to place the design of washing plants into the hands of an expert who, by training and experience in this particular line of work, is qualified to so systematize and arrange the plant to meet existing conditions as to produce the best results.

The perfection of the Luhrig system of coal washing was the life work of Mr. Luhrig among some of the most dirty and difficult coals of Europe. This system, after being perfected in Germany and covered in its essential details by letters patent, was introduced into England and Scotland by the Messrs. Merry & Cuninghame at their collieries. Its work at these places was so effective and so far in advance of the results obtained by other processes of washing that it is now almost exclusively used in Great Britain.

Messrs. Cuninghame & Co., controlling the Luhrig patents in the United States and Canada, have introduced the system into this country, and have built successful Luhrig washeries at Carterville and DeSoto, Illinois; Belt, Montana; and Union Bay, Vancouver Island. A six-hundred-ton plant for coking coal is now building at Greensburg, Pa., for the Alexandria Coal Company's Crabtree Mine. This washer is situated in that belt of coal country immediately contiguous to and surrounding the Connellsville region. The coal has all the coking qualities of the Connellsville coal, but being higher in ash and sulphur, its coke does not command the price for blast furnace and foundry use which is obtained for the Connellsville. And it is for the purpose of washing out these impurities that the Alexandria Coal Company are spending a large sum of money in this plant, hoping thereby to sell their coke for full Connellsville price. When we consider that Connellsville is the standard coke of this country, that the Connellsville field is comparatively small and is practically owned by one man, and that a thoroughly successful washing will make available thousands upon thousands of acres

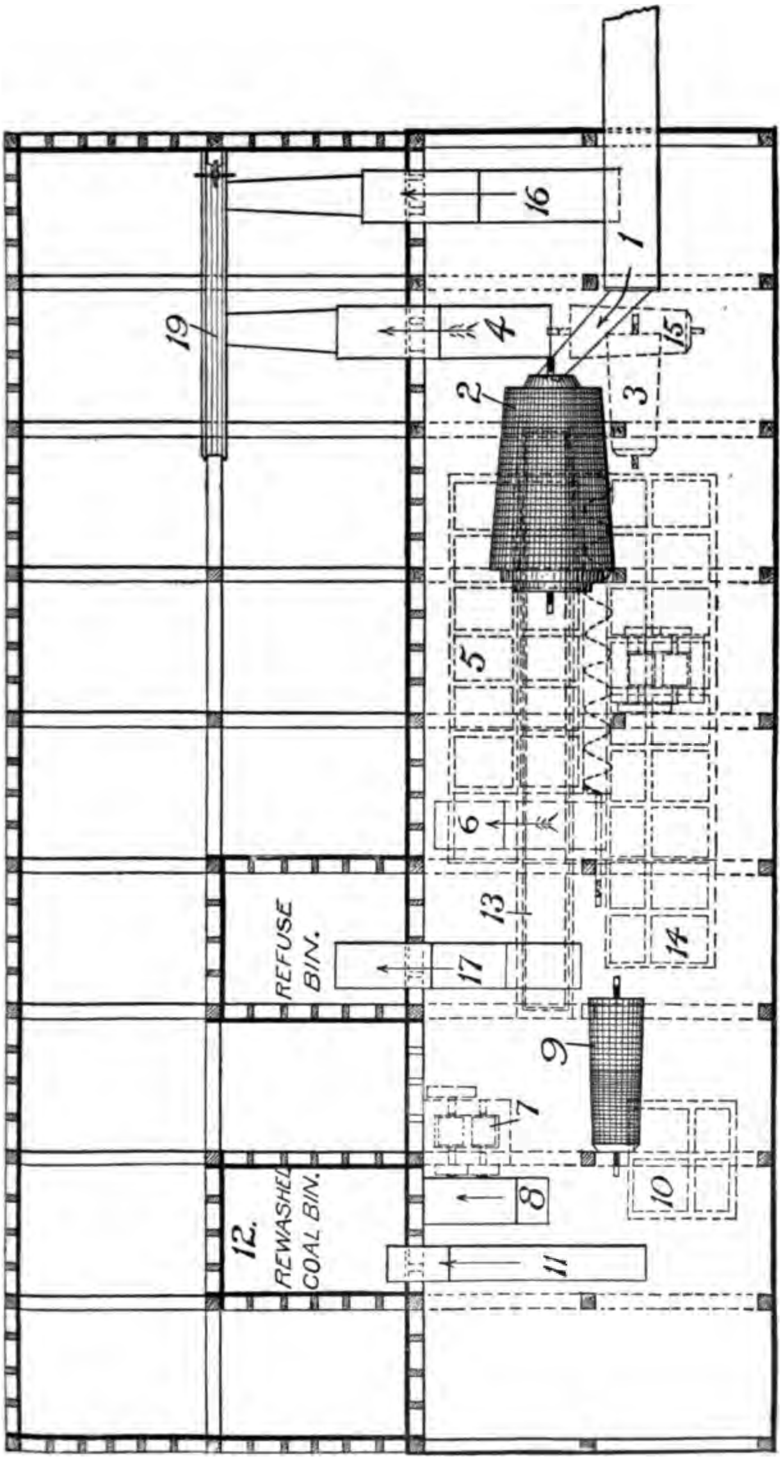
1
2
3
4
5
6
7
8
9
10
11
12.
REWASHED COAL BIN.
REFUSE BIN.
13
14
15
16
17
19

Fig. 28.

of coal for coke, fully equal to the Connellsville standard, we realize in some measure how much interest attaches to the success of this enterprise in western Pennsylvania. The following is a description of this plant (see Figs. 28–30):

A five-hundred-ton storage bin already in place will be used for the present for a "raw coal" storage bin. From this bin the unwashed coal, crushed to the size of nut coal and under, flows into the elevator 1, which takes the raw coal to the top of the washery. This elevator delivers to the triple-jacketed screen 2, which is approximately fifteen feet long by eight feet diameter and grades all the coal into four sizes, Nos. 1, 2, and 3 nut, and fine coal. On the third floor of the building are six nut-coal jigs, two for each of the three sizes of nut coal. These jigs are so adjusted that only the very clean nut coal goes over as coal, and

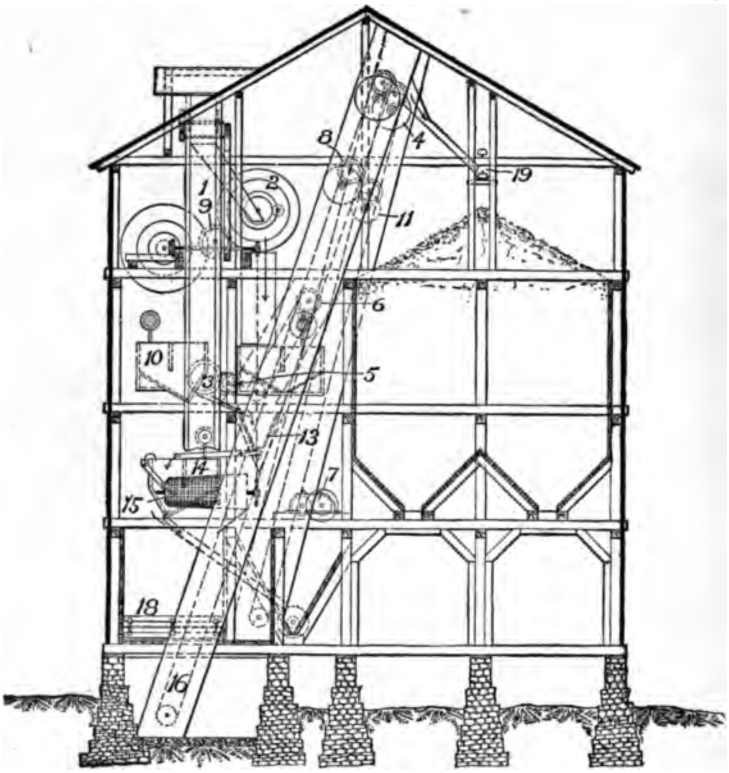

FIG. 29.

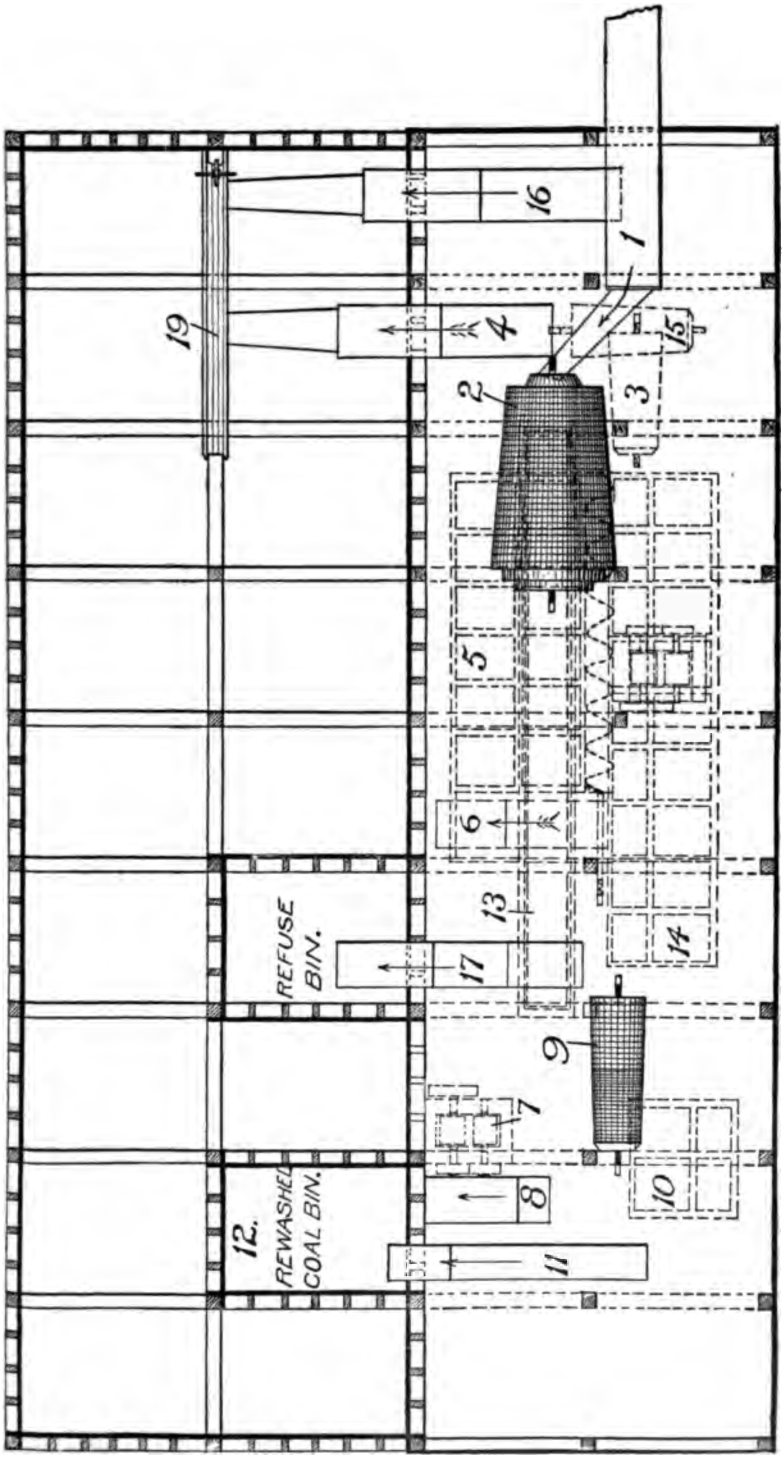
1
2
3
4
5
6
7
8
9
10
11
12.
REWASHED
COAL BIN.
13
14
15
16
17
REFUSE
BIN.
19

FIG. 28.

feldspar rewashing jigs, 10. The cleaned coal from these rewashing jigs flows into the perforated bucket elevator 11, where it is drained, and falls into bin 12 to be used as fuel.

The great advantage, in a washery for coking coal, in thus washing the nut coal before crushing is readily apparent. All impurities intergrown with the coal in the nut-coal sizes are thus at once and forever taken out of the coking coal, cleansed and used for other purposes. If these pieces were crushed before washing, their impurities would be mixed with the clean coal, and no amount of subsequent washing would get it all out again. If it is desired to reduce all the coal to a fine state before coking, it is better to wash first, and then disintegrate the clean nut coals after washing.

The fine coal passing through the openings in the outer jacket of screen 2 is met by the stream of water from the draining screen 3 and washed into the hydraulic grading box 13. This is a V-shaped box having six compartments corresponding to the six fine-coal jigs. Herein the fine coal automatically grades itself into six different sizes. Each of these sizes is washed by itself in one of the six feldspar jigs, 14. All jigs are driven by adjustable eccentrics, so that they may be very accurately adjusted to wash the particular size and kind of material which goes to them.

The clean coal from the fine-coal jigs 14 is sluiced to the draining screen 15, having one-eighth-inch openings. From here the coal passes to elevator 4. The water and fine coal dust passing through the openings of this screen flow to the sludge elevator 16. The final refuse from the fine-coal jigs 14, and from the rewashing jigs 10, passes to the final refuse elevator 17. This delivers it to a bin from which it is drawn from time to time and carted to the dump.

The elevator 17 has perforated buckets. Its foot rests in a V-shaped water-tight box. Lying full length along the bottom of this box is a screw conveyor. The water carrying refuse is discharged directly into the buckets of the elevator, so as to catch as much of the refuse as possible. What flows over with the water settles gradually to the bottom and is taken to the elevator by the screw conveyor. The water overflows at the farther end of the box into the pump tank, to be used over again.

The water from the fine-coal draining screen 15 flows in a very similar manner to the buckets of the sludge elevator 16;

is sluiced to the draining screen 3. This screen has three-eighth-inch openings, thoroughly drains the coal, and delivers it into elevator 4. This elevator runs slowly, and has perforated buckets so as to further drain off the water and deliver the coal into the washed coal storage bins as dry as possible.

All material going into the nut-coal jigs which does not flow out as clean coal passes out on a lower level as refuse. This refuse is automatically collected by a screw conveyor 5, and delivered to the perforated bucket elevator 6, which lifts it out of the water and delivers it to the crusher 7. It is this material which has been referred to above as "*intermediate product.*" It consists of refuse matter, bone coal, and pieces of pure coal which adhere to refuse matter, all having a higher specific gravity than the clean coal. This intermediate product is raised from the crusher by means of elevator 8, to screen 9, where it is again graded, and then rewashed in two special

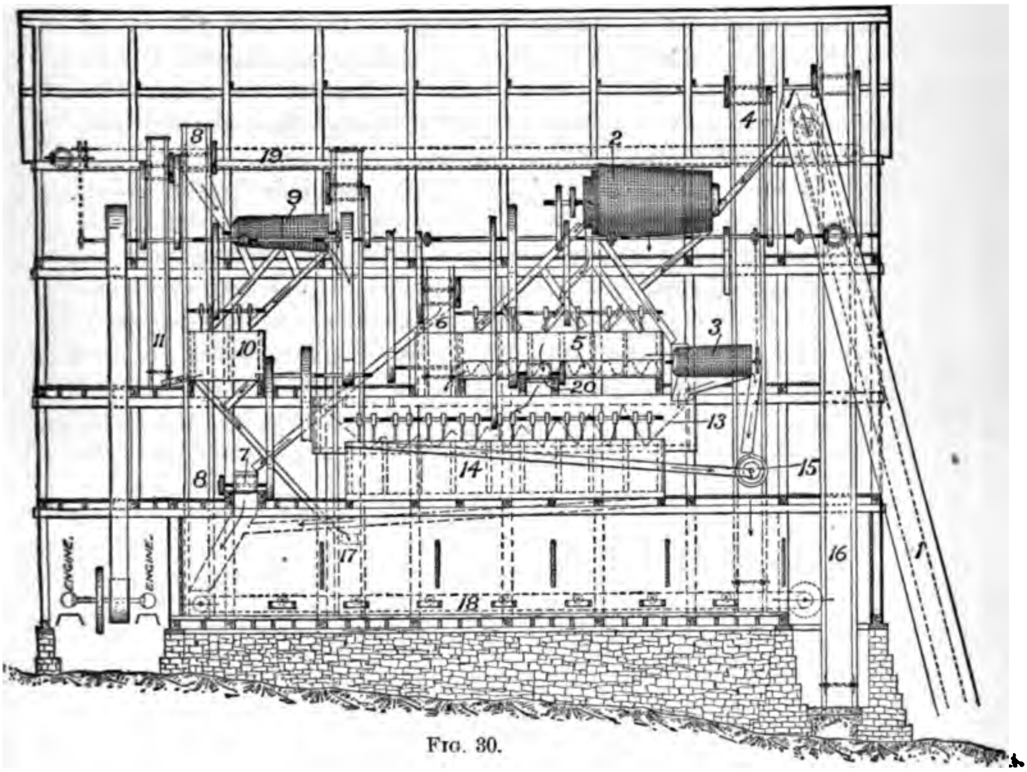

FIG. 30.

both the washed and unwashed portions. The following results were obtained:

No. of Sample.	Size.	Kind.	Ash %.	Sulphur %.	Phos. %.
1	$\frac{1}{8}$ in. to $\frac{3}{8}$ in.	Unwashed......	10.35	1.098	0.032
2	" " "	Washed........	6.88	0.604	0.025
3	$\frac{1}{16}$ in. to $\frac{1}{8}$ in.	Unwashed......	10.60	1.139	0.027
4	" " "	Washed........	6.213	0.617	0.025
5	Under $\frac{1}{16}$ in.	Unwashed......	12.400	1.606	0.033

Specific gravity of bone coal..............................1.39 per cent.
Specific gravity of pure selected coal.....................1.27 " "
Fixed ash in pure selected coal.........................2.54 " "

A previous ultimate analysis of a sample of this coal gave the following results:

	Bone %.	Pyrites %.	Slate %.
Moisture	1.150		
Vol. matter	26.900		
Ash	21.080		
Sulphur	0.549	28.28	1.098
Fixed carbon	50.321		
Phosphorus	0.072	0.05	0.017
Sp. gravity	1.552		

It is expected that the washing of the coal at this place will be so thoroughly done that the ash in the coke made from the washed coal will be below 10 per cent. and the sulphur below 1 per cent. That this may be confidently expected will be readily apparent when we consider the wonderful results achieved at Union Bay, B. C., where the ash is reduced from 35.5 per cent. to 8.5 per cent. The fixed ash in this Comox coal is 7.8 per cent., thus showing that the coal washed to within 1 per cent. of the fixed ash in the coal.

The Luhrig system, though comparatively new in this country, is no new thing. Over 200 plants are in daily use in England, Germany, Austria, and other parts of the world, all doing good work. Several of these plants have capacities of 175 tons per hour each. Such is the control which an expert operator has over the results that the Messrs. Cuninghame & Co. are enabled to fully guarantee beforehand the exact results which will be obtained in washing any coal by this process.

On page 27 of his valuable book on "Coke" Mr. John Fulton says that the coal of Belt, Montana, cannot be coked. In 1894 a Luhrig washery was erected at Belt, also some beehive coke ovens. These are now producing one hundred tons per day of coke. The Anaconda Copper Company, who own the plant at Belt, were paying $13.80 per ton for Pocahontas and $12.50 for Connellsville coke. The Belt coke, which fully answers their purpose, now costs them $4.40 per ton. The washer is therefore saving them about $900 a day by so preparing this so-called non-coking coal that it makes a coke very fair in quality. In this Belt coal of 1 inch to 1½ inches in size the ash was reduced by washing from 29.69 per cent. to 7.35 per cent., and in the ½ inch to 1 inch from 18.74 per cent. to 5.56 per cent. Their coke at present averages 10¼ per cent. in ash.

At Union, on Vancouver Island, the Dunsmuirs had a few ovens at which they made a very inferior coke from coal washed in a Shepard washer. After an inspection of the washer at Belt, they put up at Union Bay a 600-ton Luhrig washer and 100 beehive coke ovens. This washer achieved the wonderful result, already mentioned, of bringing the ash down from $35\frac{5}{10}$ per cent. in the unwashed coal to $8\frac{5}{10}$ per cent. in the washed, the fixed ash being $7\frac{5}{10}$ per cent. When washing with salt water, as they did for a short time during last summer's dry season, the coal showed 10 per cent. of ash. The coke ovens were recently started and are making a very fine quality of coke.

In a Luhrig plant for fuel coal, such as constructed at Carterville and De Soto, Illinois, the essential difference from the washer at Crabtree, described above, consists in keeping the sizes of coal separate as they come from the jigs. The several sizes are drained over bumping screens direct into the bins, and sold as No. 1 nut, No. 2 nut, No. 3 nut, and No. 4 nut. The sludge is either used under their boilers or is thrown away. A spray of clean water directed on the bumping screens washes the coal bright and clean, so that it appears almost as bright as an anthracite. In a recent test made in the Fisher Building, Chicago, the cost of evaporating 1,000 pounds of water with Indiana block coal was $23\frac{4}{10}$ cents, with Luhrig No. 1 washed nut $17\frac{8}{10}$ cents, showing a saving of $5\frac{6}{10}$ cents, or 24 per cent. The washing of this southern Illinois coal by this process brings the owners of the plant a profit of about 35 cents a ton. The analysis of this coal before and after washing is as follows:

	BEFORE. Per cent.	AFTER. Per cent.
Moisture	5.0	5.0
Fixed carbon	44.0	57.0
Volatile matter	32.0	33.0
Sulphur	1.0	0.8
Ash	18.0	4.2
	100.0	100.0

In 1889 a 600-ton Luhrig washery was erected at North Motherwell, near Glasgow, Scotland. The ash in the unwashed coal was 23 per cent. In contracting for this plant the following guarantees were given: capacity, 600 tons per day of 10 hours; ash in the pearl coal, $\frac{5}{16}$ inch to ^{1} inch, not to exceed 6 per cent., and for every 1 per cent. of ash left in this coal over 6 per cent. the patentees were to forfeit £100. The refuse was guaranteed not to contain more than 2 per cent. of pure coal, and for every 1 per cent. of coal found in the refuse over and above this 2 per cent. the patentees were to forfeit £100. The cost of labor was guaranteed not to exceed $\frac{8}{10}$ of a penny, or about $1\frac{1}{2}$ cents per ton handled, and for every $\frac{1}{10}$ of a penny it cost above this the patentees were to forfeit £150.

How these guarantees were met will appear from the following facts and figures from a paper read in 1893 before the Mining Institute of Scotland, giving the results of an examination the author of the paper made of the washer.

In the four years it had been running there had been a loss of only two hours' output, and this was due to the breaking of the main belt.

In the unwashed pearl coal the ash was 22 per cent., and in the washed pearl $3\frac{1}{10}$ per cent. to 4 per cent., or 2 per cent. under the guarantee.

During a week's run the washer cleansed 2,659 tons of coal, running 35 hours, or at a rate of 760 tons in 10 hours—160 tons per day above the guarantee. Of this amount 320 tons were refuse, leaving 2,339 tons of clean coal.

The total cost of washing 2,339 tons of coal, including labor, oil, steam, and loading into cars, was $\frac{79}{100}$ of a penny, or almost exactly the guaranteed amount.

During the year 1892 there were washed at North Motherwell 125,704 tons of raw material. The estimated profit on this, due

On page 27 of his valuable book on "Coke" Mr. John Fulton says that the coal of Belt, Montana, cannot be coked. In 1894 a Luhrig washery was erected at Belt, also some beehive coke ovens. These are now producing one hundred tons per day of coke. The Anaconda Copper Company, who own the plant at Belt, were paying $13.80 per ton for Pocahontas and $12.50 for Connellsville coke. The Belt coke, which fully answers their purpose, now costs them $4.40 per ton. The washer is therefore saving them about $900 a day by so preparing this so-called non-coking coal that it makes a coke very fair in quality. In this Belt coal of 1 inch to 1½ inches in size the ash was reduced by washing from 29.69 per cent. to 7.35 per cent., and in the ½ inch to 1 inch from 18.74 per cent. to 5.56 per cent. Their coke at present averages 10¼ per cent. in ash.

At Union, on Vancouver Island, the Dunsmuirs had a few ovens at which they made a very inferior coke from coal washed in a Shepard washer. After an inspection of the washer at Belt, they put up at Union Bay a 600-ton Luhrig washer and 100 beehive coke ovens. This washer achieved the wonderful result, already mentioned, of bringing the ash down from $35\frac{5}{10}$ per cent. in the unwashed coal to $8\frac{5}{10}$ per cent. in the washed, the fixed ash being $7\frac{5}{10}$ per cent. When washing with salt water, as they did for a short time during last summer's dry season, the coal showed 10 per cent. of ash. The coke ovens were recently started and are making a very fine quality of coke.

In a Luhrig plant for fuel coal, such as constructed at Carterville and De Soto, Illinois, the essential difference from the washer at Crabtree, described above, consists in keeping the sizes of coal separate as they come from the jigs. The several sizes are drained over bumping screens direct into the bins, and sold as No. 1 nut, No. 2 nut, No. 3 nut, and No. 4 nut. The sludge is either used under their boilers or is thrown away. A spray of clean water directed on the bumping screens washes the coal bright and clean, so that it appears almost as bright as an anthracite. In a recent test made in the Fisher Building, Chicago, the cost of evaporating 1,000 pounds of water with Indiana block coal was $23\frac{4}{10}$ cents, with Luhrig No. 1 washed nut $17\frac{8}{10}$ cents, showing a saving of $5\frac{6}{10}$ cents, or 24 per cent. The washing of this southern Illinois coal by this process brings the owners of the plant a profit of about 35 cents a

DCCV.*

PAPER FRICTION WHEELS.

BY W. F. M. GOSS, LAFAYETTE, IND.
(Member of the Society.)

If two toothless wheels are pressed face to face, the rotation of one will tend to turn the other, and under favorable conditions power may be transmitted from the driver to the follower. Such an arrangement may employ all the forms common to toothed gearing, but as the contact is one of pure rolling such gearing is freed from some of the limitations which govern the use of toothed wheels. For example, in friction gearing the driven wheel may be disengaged and stopped without danger of shock, while the driver continues its motion; or, if out of gear, it may as readily be started, its speed accelerating until it becomes normal.

The amount of power which can be transmitted by friction gearing depends upon the characteristics of the material used in the two wheels which run in contact. As usually constructed, the driver is made of yielding material, such as wood, raw-hide, leather, or india rubber, while the driven wheel is almost invariably of cast iron. Such combinations have the advantage of producing a high coefficient of friction between the wheels; and again, if there is slippage, it is the harder wheel that stops, and upon this the continuous motion of the softer driver inflicts no damage. Until quite recently all such gearing has been of light construction, and the power transmitted correspondingly small, and so long as leather and raw-hide continued to be the materials most preferred for the construction of drivers, no very heavy work was practicable.

There has recently appeared, however, a new material which seems well suited to the requirements of friction wheels. This is compressed straw-board; and as in belt transmission the

---

* Presented at the New York meeting (December, 1896) of the American Society of Mechanical Engineers, and forming part of Volume XVIII. of the *Transactions*.

to washing, was £8;013 12*s.* 8*d.*, or about $39,000, after deducting all operating expenses.

At the Acton Hall Colliery, Yorkshire, England, a 500-ton Luhrig washery has been built entirely of iron, steel, and masonry. The machinery is driven by three electric motors, the power for which is furnished from a central station at the colliery. The coal treated could not be used for coke-making before being washed. The coke now produced, which is made from the sludge only, the nuts being disposed of separately, contains 7½ per cent. to 10½ per cent. of ash and about 1 per cent. of sulphur.

At Kattowitz, in Upper Silesia, a coal containing 47 per cent. of ash has been brought down to 5 per cent. ash. The pyrites in this coal is separated from the other refuse and sold for the manufacture of sulphuric acid. The profit from this sale pays the entire expense of cleaning the coal.

shafting, while Fig. 35 shows a device which has been employed for giving motion, in either direction, to the spindle of a well-known shaping and panel-carving machine.

In the absence of data which would serve as a basis for calculating the amount of power which any paper wheel can transmit, an experimental study of the problem was resolved upon, and with this end in view apparatus was devised which is shown diagrammatically by Fig. 36. The shaft *A* of this figure runs in fixed bearings and carries the paper friction wheel; it is designed to be driven by belting from any convenient source of power, the direction of the motion being that indicated by the arrow. The shaft *B* carries the iron follower and the brake wheel. The bearings of this shaft are capable of receiving motion in a horizontal direction, and by means of suitable mechanism connected with them, the iron follower may be made to press against the paper driver with any force desired. The pressure exerted by *B* upon *A* is the "pressure of contact," and is represented by *P*. Through the action of the brake, the tendency of the iron wheel to revolve with the paper wheel may be resisted to any desired degree, and the theory of the machine assumes that the energy absorbed by the brake is equal to that transmitted from the driver to the follower at their point of contact, *C*. The resisting force of the brake may readily be reduced to an equivalent force, *F*, acting at the circumference of the follower, and its value may be accepted as the force actually transmitted from one wheel to the other at the point of contact, *C*.

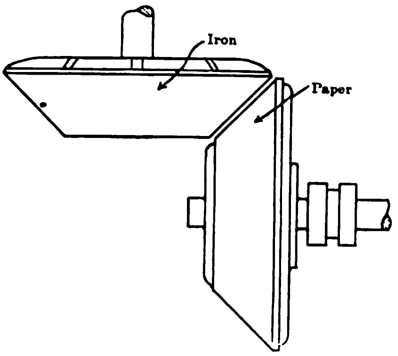

FIG. 34.

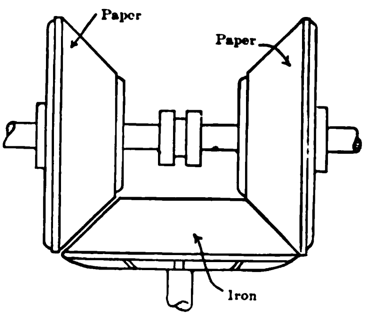

FIG. 35.

From this brief description, it will be evident that the functions of the apparatus are such as will permit a study of the relationship existing between F and P, which relationship may be expressed as the coefficient of friction, thus:

$$f = \frac{F}{P}$$

Other things being equal, the power which can be transmitted by any such gearing will vary directly with the coefficient of friction.

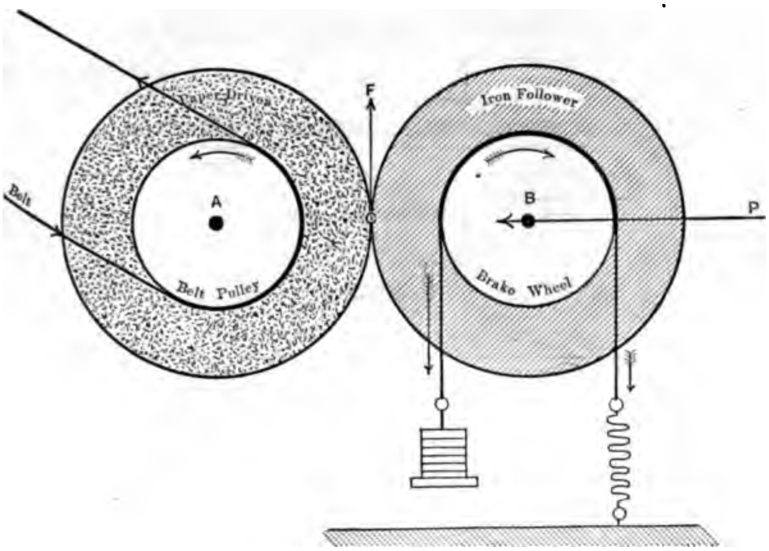

FIG. 36.

The actual machine used is shown by Fig. 37. It meets all the conditions which have been defined, excepting that the shaft B does not run in frictionless bearings, as a strict adherence to the assumed theory would require. It is thought that, during the experiments, the journal friction at B was fairly constant, and that its value was always small as compared with that of the forces transmitted by the gearing. Its effect, so far as it may have had an effect, would have been to reduce the value of the observed coefficient of friction. The values as observed, however, are doubtless better for the purposes in hand than a true value, since the employment of friction wheels in practice will generally involve losses by journal friction similar to those existing during the progress of the experiments in question.

By reference to Fig. 37, it will be seen that the fixed bearings of shaft *A* are fitted between guides in such a manner as to allow the bearings of the shaft to be blocked out towards *B*, in case a friction wheel is to be experimented upon which is much smaller in diameter than the one shown. The bearings of *B* slide at a good fit between the guides in the frame, and the pressure of contact between the friction wheels is secured by weights on the holder *E*, acting through a bell crank and suitable connecting links. The fulcrum of the bell crank is in a block *G*, which may be adjusted by the hand wheel *H*, thus allowing the arms of the bell crank to be brought to their normal position, and in this way offsetting slight variations in the diameter of the friction wheels. Power was delivered to *A* by two three-inch belts, and was absorbed at *B* by a rope dynamometer. Slippage was determined from readings of counters taken simultaneously from each shaft.

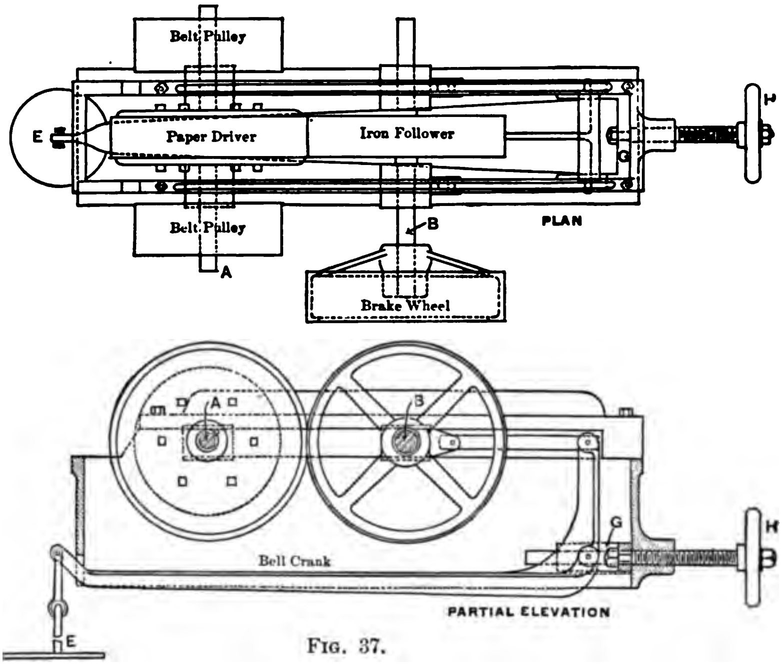

FIG. 37.

In carrying out the experiments it was found convenient first to load the weight holder *E*, Fig. 37, and then to bring the bell crank to its normal position by adjusting the trunnion block *G*; the follower was thus made to roll with the driver under a definite pressure of contact. By applying the brake a light resistance was then introduced to oppose the motion of the driven shaft, and this was maintained constant for a sufficient period to allow observations to be made for slip.

The pressure of contact, the load on the brake, and the slip having been observed, a new set of conditions was obtained by increasing the brake load, after which, observations were repeated. In this manner a series of observations was made under a constant pressure of contact, but at different brake loads; and as each increment of brake load increased the slip, the resulting data gave the relation between the per cent. of slippage and the force transmitted for the pressure of contact chosen. When the brake load had been so much increased as to make the slippage excessive, a new value for the pressure of contact was chosen, and the whole process as already described was repeated.

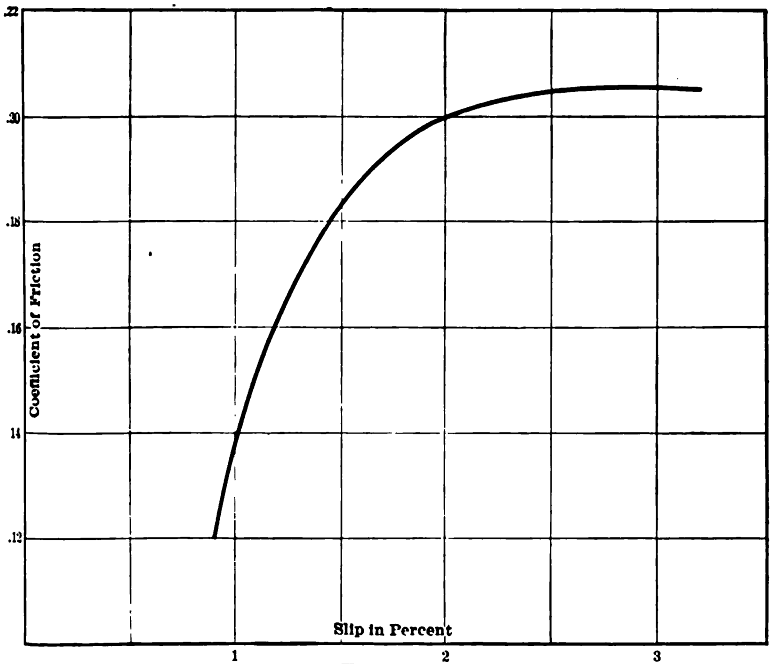

FIG. 38.

The results were finally grouped for purposes of comparison, in such a manner as would make each group present but a single variable factor.

The experiments involved paper friction wheels of approximately 5½, 8, 12, and 16 inches diameter, all in contact with a 16-inch cast-iron wheel. The contact pressure was varied from 75 pounds per inch of width to more than 400 pounds, and the speed limits gave a peripheral velocity varying from 450 to 2,700 feet per minute. In an effort to eliminate all inconsistencies the work was many times repeated, the whole process involving more than 5,000 observations.

The following is a summary of results : *

Slippage.—By increasing the load to be carried, the slippage may always be gradually increased to three per cent., and under favorable conditions its gradual increase may reach a maximum of six per cent., but when the slippage is between the limits of three per cent. and six per cent. it is likely to undergo a rapid increase to 100 per cent.; that is, the driven wheel is likely to stop.

The Coefficient of Friction depends upon conditions some of which have not been studied and are not understood. It is most affected by slippage. Its value increases with increase of slip until the latter becomes about three per cent., after which the action of the gearing becomes uncertain. With a slippage of two per cent., the maximum value of the coefficient rises above twenty-five per cent., and as the slippage approaches three per cent., even larger values have been observed. Fig. 38 shows a relation between slippage and the coefficient of friction, which can easily be maintained with paper friction wheels of 8 inches or more in diameter.

The coefficient of friction is apparently constant for all pressures of contact up to a limit which lies between 150 and 200 pounds per inch of width of wheel-face, beyond which limit its value apparently decreases.

---

* In presenting the results of the experiments which have been described, the writer acknowledges the assistance of Prof. M. J. Golden, who worked up the details of the testing-machine, Fig. 37 ; of the Rockwood Manufacturing Company of Indianapolis, through whose courtesy all necessary friction wheels were supplied ; and of Messrs. Robt. D. Hawkins, M.E., '95, and T. E. Layden, B.S., '96, who as students in the Purdue laboratory conducted the experimental work.

Friction wheels of 8, 12, and 16 inches diameter give nearly the same value for the coefficient, while results from a six-inch wheel are lower by about ten per cent.—a fact which would seem to indicate that wheels smaller than those experimented upon may have a still lower value for their coefficient.

Variations in peripheral speed between 400 and 2,800 feet per minute do not affect the coefficient of friction.

Pressure of Contact.—With a constant coefficient of friction, the power transmitted varies directly with the pressure of contact. During the comparatively short period covered by the experiments, the paper wheels gave no indications of breaking down under pressure as high as 400 pounds per inch in width. The work was not continued through a period sufficiently long, however, to permit a determination of the maximum pressure with which paper drivers may be forced against their iron followers; but it has already been noted that the coefficient of friction is maximum under a pressure of about 150 pounds per inch in width, and while the amount of power delivered may be augmented by increasing the pressure above this limit, the most efficient pressure is that for which the coefficient of friction is maximum.

Horse-Power.—By making d the diameter of the friction wheel in inches, w the width of its face also in inches, and N the revolutions per minute, and by accepting 0.2 as a safe value for the coefficient of friction, and a pressure of 150 pounds per inch width of face as the pressure of contact, the horse-power may be written as,

$$\text{H. P.} = \frac{150 \times 0.2 \times \frac{1}{12} \pi d \times w \times N}{33000} = .000238\, d\, WN.$$

This formula is believed to be safe for friction wheels which are 8 inches or more in diameter, and under conditions which make it possible for them to be kept reasonably clean. By its use the following table has been calculated :

HORSE-POWER WHICH MAY BE TRANSMITTED BY MEANS OF A CLEAN PAPER FRICTION WHEEL OF ONE INCH FACE WHEN RUN UNDER A PRESSURE OF 150 POUNDS.

DIAMETER OF PULLEY, IN INCHES.	REVOLUTIONS PER MINUTE.										
	25	50	75	100	150	200	300	400	600	800	1000
8	.0476	.0952	.1428	.1904	.2856	3808	.5712	.7616	1.1424	1.5232	1.904
10	.0595	.1190	.1785	.2380	.3570	.4760	.7140	.9520	1.4280	1.9040	2.380
14	.0833	.1666	.2499	.3332	.4998	.6664	.9996	1.3328	1.9992	2.6656	3.332
16	.0952	.1904	.2856	.3808	.5712	.7616	1.1424	1.5232	2.2848	3.0464	3.808
18	.1071	.2142	.3213	.4284	.6426	.8568	1.2852	1.7136	2.5704	3.4272	4.284
24	.1428	.2856	.4284	.5712	.8568	1.1424	1.7136	2.2848	3.4272	4.5696	5.712
30	.1785	.3570	.5355	.7140	1.0710	1.4280	2.1420	2.8560	4.2840	5.7120	7.140
36	.2142	.4284	.6426	.8568	1.2852	1.7136	2.5704	3.4272	5,1408	6.8544	8.568
42	.2499	.4998	.7497	.9996	1.4994	1.9992	2.9988	3.9984	5.9976	7.9968	9.996
48	.2856	.5712	.8568	1.1424	1.7136	2.2848	3.4272	4.5696	6.8544	9.1392	11.424

DISCUSSION.

Prof. Paul M. Chamberlain.—This subject which Professor Goss has investigated is an interesting one, and the data he has given us are valuable. It is to be hoped that the investigations may be made to include bevel gears, as there is perhaps a greater need for simple efficient angular transmission than between parallel shafts, and the coefficient of friction, I am led to believe, is somewhat different.

Straw-board without cement works very well if the journal friction is not excessive. The design of the journals needs to be somewhat more carefully worked out than if toothed gearing or mule pulleys are used, and some quick method of making adjustment for wear or change of the humidity of the atmosphere.

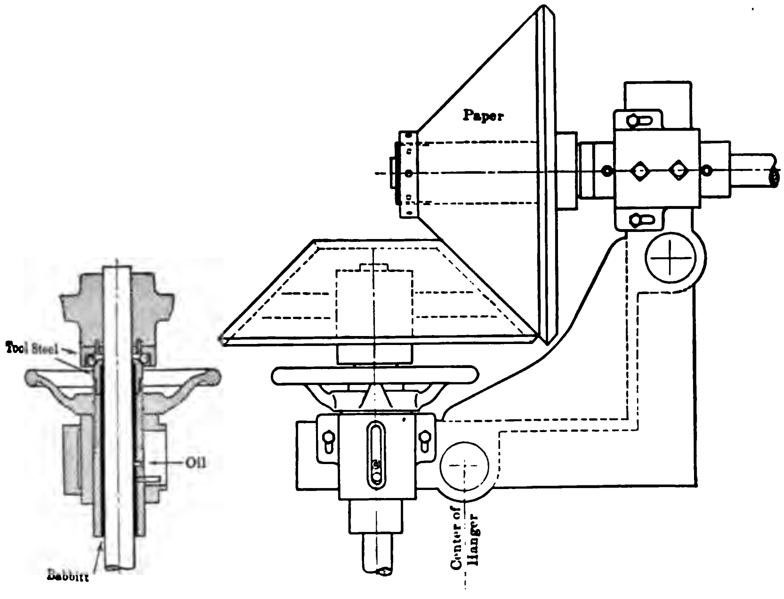

FIG. 39.

I present herewith, in Fig. 39, a design for some ball-bearing journals which were made for friction cones and shafting already in position but not working satisfactorily. The thrust bearings of the shafting were at their extreme ends, and the journals taking the side thrust near the cones were doing duty of over 150 pounds per square inch of projected area. The mean diameter of the cones is about 12 inches, the speed 150 revolutions per minute, and the horse-power transmitted not over 4. The pressure per inch width of pulley is nearly twice that used in Professor Goss's experiments. With the arrangement used in the sketch, the apparatus has now run over a year giving good satisfaction.

In a new design it would be advantageous to carry the bearings nearer the centre of the rims and use very stiff shafting near the cones, as any deflection whatever tends to wear the paper out of true.

DISCUSSION.

Prof. Paul M. Chamberlain.—This subject which Professor Goss has investigated is an interesting one, and the data he has given us are valuable. It is to be hoped that the investigations may be made to include bevel gears, as there is perhaps a greater need for simple efficient angular transmission than between parallel shafts, and the coefficient of friction, I am led to believe, is somewhat different.

Straw-board without cement works very well if the journal friction is not excessive. The design of the journals needs to be somewhat more carefully worked out than if toothed gearing or mule pulleys are used, and some quick method of making adjustment for wear or change of the humidity of the atmosphere.

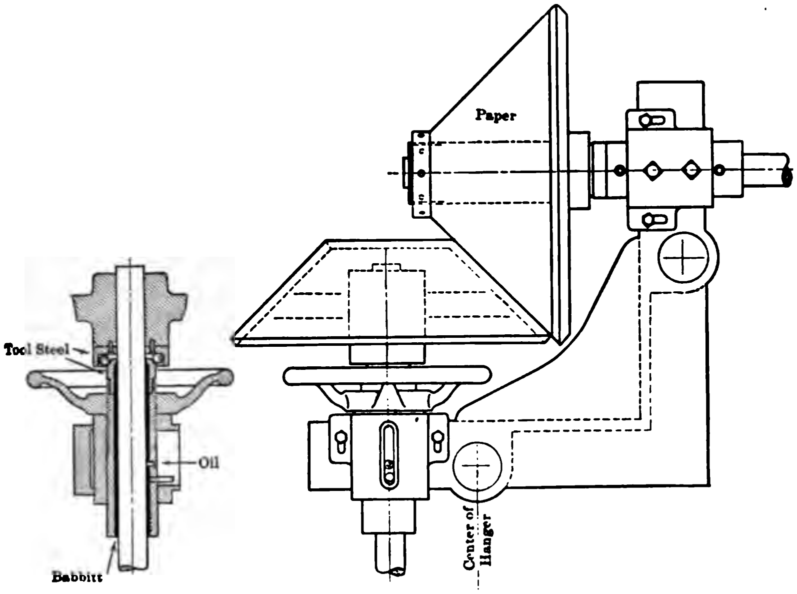

Fig. 39.

I present herewith, in Fig. 39, a design for some ball-bearing journals which were made for friction cones and shafting already in position but not working satisfactorily. The thrust bearings of the shafting were at their extreme ends, and the journals taking the side thrust near the cones were doing duty of over 150 pounds per square inch of projected area. The mean diameter of the cones is about 12 inches, the speed 150 revolutions per minute, and the horse-

FIG. 40.

shown in Fig. 41 a very efficient boiler for high-pressure work. Inasmuch as the ancients had little or no use for steam under pressure, and as their boilers were principally used for heating water, it was sufficient that the boiler shells and covers offered only a slight resistance, requiring merely a heavy, well-fitted cover, which was sufficient to prevent the escape of the steam.

The first apparatus (No. 73,018), illustrated by the photograph, Fig. 40, and the drawings showing vertical and horizontal sections (Figs. 41 and 42), consists of a cylindrical receptacle, *A*, which measures thirty centimetres in internal diameter and forty-eight centimetres in height. The thickness of the walls is a little more than a millimetre, and as one does not see any joints in the sides of the cylinder, it may be supposed that it was cast, as were generally all of the Pompeiian vases, and then worked or turned all round to even the thickness. The top of this receptacle was closed by a beautifully engraved or chased lid, *B*, which was removable, but neatly fitted over a bronze reinforcing ring, *C*.

At the bottom of the external cylinder it is joined to an internal cylinder of smaller diameter, and which rises to a certain height, and terminates in a spherical cap. The diameter of this internal shell is twenty-five centimetres, and the height thirty centimetres. The annular space, or jacket, between the cylinders constitutes the water capacity of the boilers, while the interior of the inner cylinder constitutes the furnace chamber, the grate for which forms a very interesting feature of the construction. A careful examination of the particular boiler illustrated herewith shows that the annular water space does not preserve the same thickness all around, especially the oven, due more to having been damaged than to imperfect construction. Neither is the furnace chamber exactly central to the boiler. It is clear, however, that all of the surface of the inner chamber constitutes the heating surface in this Pompeiian apparatus, the same as in our water-jacket boilers of the present day. The grate bars (see Figs. 41 and 42), seven in number, were made from sheet bronze, rolled, and soldered or brazed. These tubes open at both ends into the bottom of the water jacket, thus forming water tubes, or grates, upon which rested the fuel, and through which traversed the water as it circulated in the boiler.

To quote from the description furnished me by Mr. Milone: "By this arrangement of the grates not only was the heating

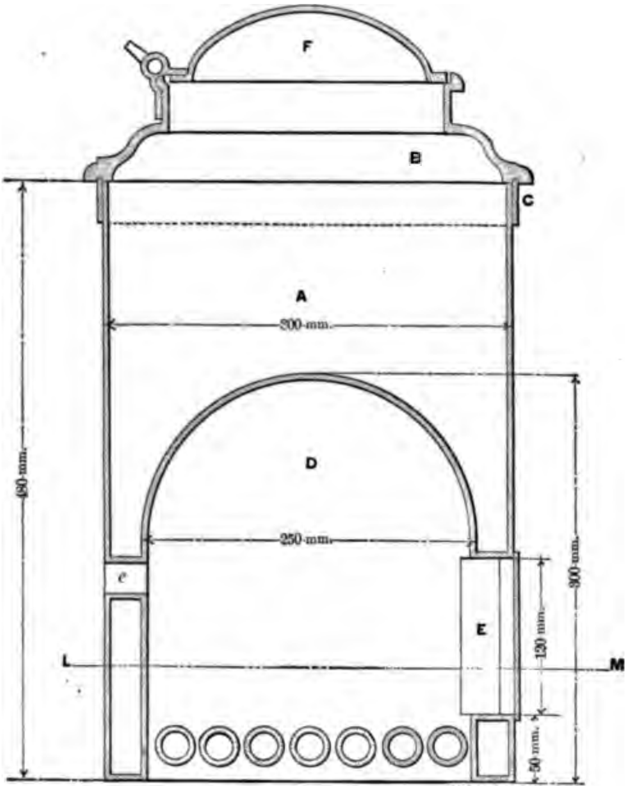

AMERICAN BANK NOTE CO. N.Y.

FIG. 41.

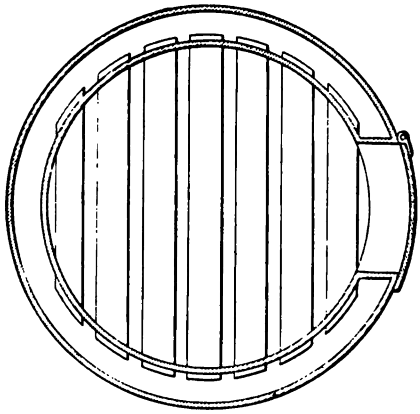

SECTION THROUGH L M

FIG. 42.

surface greatly increased, but the heating was rendered more efficient, thus showing that the ancients fully understood the principle of distributing across the furnace a certain number of tubes, in order to increase the heating surface, and to aid the evaporation by means of a more active circulation of the water."

The rectangular opening through which the fuel was fed, was placed five centimetres above the bottom of the boiler, and is one hundred and twenty millimetres in height and one hundred millimetres in width. This opening was provided with a small door made of bronze, hung on two vertical hinges, the door being operated by a bronze knob or handle, representing a ram's head. There is no evidence that these Pompeiian boilers were connected to a stack or chimney; but little annoyance was caused by the escape of gas or smoke, as the Pompeiians used charcoal as a fuel, the real "carbo" of the Latins In order to permit the escape of the gases, at the height of one hundred and forty millimetres from the bottom of the boiler, there were provided three openings from the combustion chamber to the outside. These were formed by tubes which crossed the annular zone, or water jacket, and terminated at the outer end in a masked face, as may be seen on the left side of the photograph.

It is interesting to note here the artistic turn of mind of the ancients, for no matter how simple or how ordinary might be the article under construction, it seemed to be second nature to them to ornament every detail.

The cover, *B*, referred to above, is made of cast bronze, decorated in a very artistic manner, and can be removed and put in place by means of two small handles, each one gracefully representing two athletes wrestling, as is shown by the photograph, Fig. 40. The cover of the boiler is made in two parts, the larger of which was probably only removed in case of making internal repairs, or for the purpose of cleaning the boiler. There is a supplementary lid, *F*, much smaller, that opened on hinges, shown in Fig. 41, and it was through this opening that the water was poured into the boiler. The hot water was extracted by means of a big ladle with a long handle, or a pan or vessel. This second lid, or cover, had in the centre a knob that represented an "Eros" or Cupid, entwined with a dolphin, having in his left hand a lyre and in the other the "plettro," or bow.

FIG. 43.

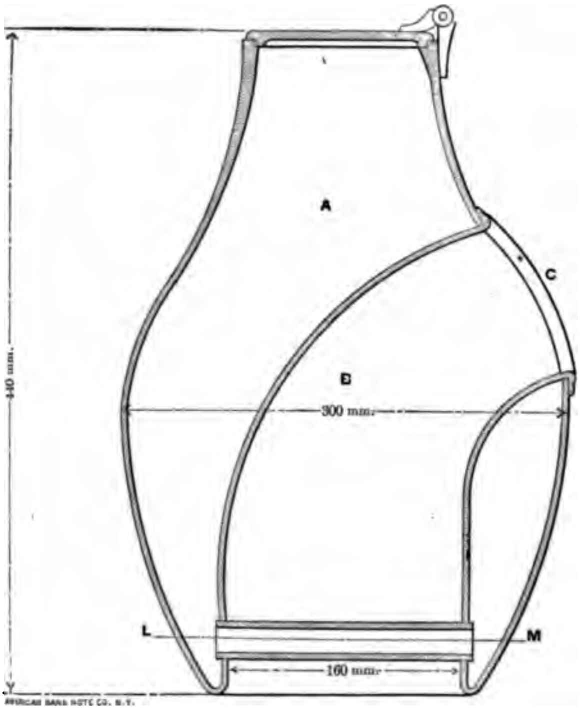

FIG. 44.

SECTION THROUGH L M

FIG. 45.

Finally, the boiler is raised thirty centimetres, on an artistic tripod representing lion's claws, thus allowing the entrance, below the grates, of the air necessary for the proper combustion of the fuel. Two handles that are attached to the outer shell of the boiler take the form of a man's hands, and serve to lift the entire boiler with the tripod.

As near as can be ascertained, the above boiler was found in Pompeii proper, but my informant is not able to indicate the exact spot. It probably belongs to the old collection of Pompeii.

The second Pompeiian boiler (No. 78,673), illustrated by Fig. 43, and shown in vertical and horizontal sections by Figs. 44 and 45, is much more simple than the boiler above described, not only in the internal construction, but also in the decoration.

This boiler has the form of an urn or an ancient vase, and is constructed of bronze, cast in one piece. On the outside it measures nearly thirty centimetres in diameter in the widest part and forty-four centimetres in height. Inside is the oven or furnace, *B*, consisting of a cylindrical shell attached to the outer shell at the mouth, *C*, from whence it turns inward and downward, widening in the meantime until it reaches the grate, just below which it flanges outward, and is attached to the outer shell. Thus we have an inner and outer cylinder, the annular space between forming a water jacket, in which was contained the liquid to be heated. The surface of the inner cylinder constituted the heating surface of the boiler. The boiler is also provided with water grates, consisting of tubes made from sheet bronze, and opening at both ends into the annular water space, or jacket. Here, then, is another ancient example of the water-tube principle, this apparatus being constructed with a view to attaining greater efficiency by the more extensive heating surface and more active circulation.

To the sides of this urn-shaped boiler are attached two very simple handles, and the whole is supported by an elégant tripod of a little more than ten centimetres in height.

It has been suggested that this apparatus may have served at some time to heat wine as well as water, which suggestion appears reasonable, as many competent authorities agree that the Pompeiians made great use of hot drinks. Probably this urn, or boiler, was found in one of the "termopodi," or, in modern language, cafés, in Pompeii or some other city of the Campania. At Pompeii were to be found several of these merchants or dispensers of hot drinks, but my informant states that he has not ascertained to what other city of the Campania it may have appertained; that is to say, he is not positive that this apparatus was really found in Pompeii, though he is fully satisfied as to the origin of the first apparatus described above.


FIG. 46.

It should be noted also that the opening through which the fuel entered was judiciously placed on the same side as the hinge for turning the lid, thus enabling the attendant to incline the urn for the purpose of pouring out part of the liquid contents without spilling the fuel.

This urn-shaped boiler does not, of course, present so striking a resemblance to some of our modern boilers as the first boiler described above, although it appears to be the boiler which has been illustrated and described by quite a number of trade journals and technical papers during the past two years.

I have also received from the Dutch Consul at Genoa photographs of a group of ancient Pompeiian relics obtained through a friend of his in Naples. The photographs reproduced here are Figs. 46, 47, and 48. Evidently the subject offered this layman little in the way of either romance or sentiment; consequently our record is deficient in that it lacks any accurate description of the articles illustrated in the photographs. It is assumed that the apparatus shown in Fig. 48 is the boiler referred to in the different descriptive articles which have appeared in the technical papers lately. The apparatus shown in Fig. 46 is said to be constructed similar to Fig. 48, but whether it consists of an annular water space connected by horizontal water tubes, or simply an outer vessel containing an inner smaller vessel whose flanged rim rests on the upper edge of the outer vessel, after the manner of the ordinary double boiler so common in the modern household, our informant does not state.

The central group, Fig. 47, is said to represent merely ordinary kitchen furniture, used no doubt in the culinary department of some large household. Certain features of this group, brought out by the photograph, might indicate that this apparatus was utilized for more important work, and it is unfortunate that we cannot have some further information as to its internal construction.

The description of the two boilers is somewhat meagre and unreliable, but sufficient is given to establish the fact that the large boiler (Fig. 48), at least, is provided with a water jacket, with some form of grating for supporting the fire underneath. A cock at one side, which appears to be very artistically decorated, served to draw off the heated liquid.

The latter photographs, reproduced herewith, were obtained from the gallery opposite the National Museum at Naples. Apparently little effort has been made by the authorities at the museum to trace the origin and history of the different relics I

FIG. 48.

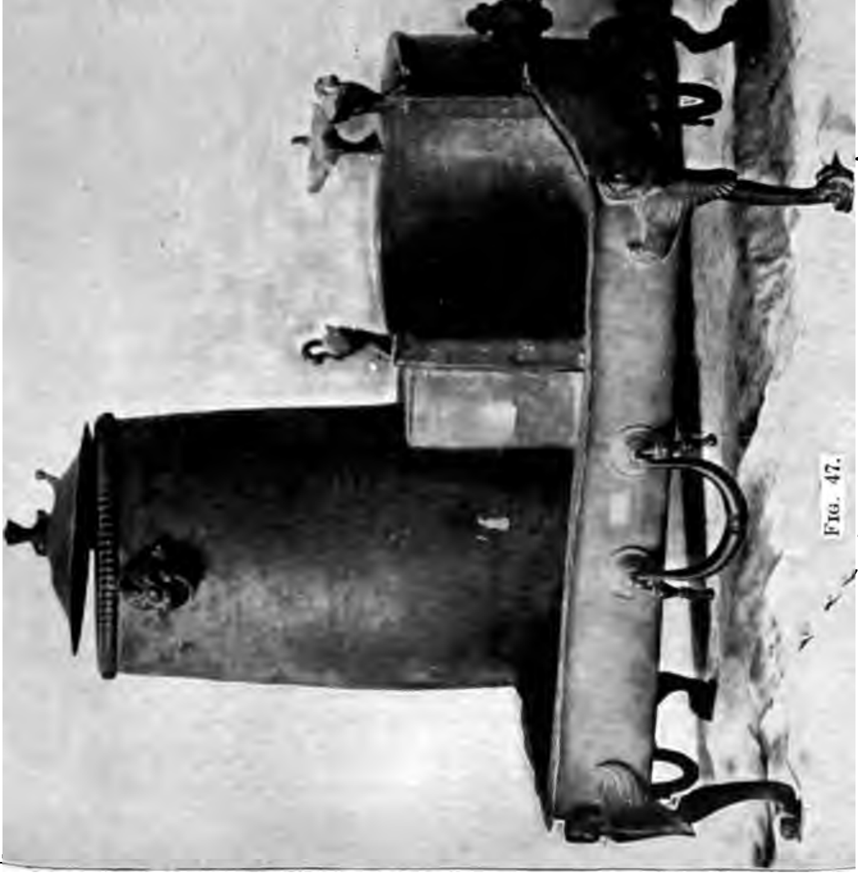

FIG. 47.

have described above, my informant stating that no one had interested himself in the matter, although some of the articles were discovered as many as forty years ago.

This delinquency seems all the more apparent from the fact that in order to give a proper reply to my inquiry, it became necessary to call in the services of a photographer and an engineer to illustrate and describe these precious relics of ancient days. I only regret that the same effort was not made to give us fuller information regarding the apparatus illustrated in Figs. 46, 47, and 48, but let us hope that other of our members will interest themselves as opportunity offers, and furnish the Society with additional information on the subject of ancient boiler-making. Our foreign members should assist in this.

For much of the data contained in this paper I am under obligations to M. Francisco Milone, a very able engineer of Naples, and to the Dutch Consul at Genoa, N. I. Tiedman. I have also to acknowledge the courteous and valuable assistance rendered by the Hon. Com. G. Solimbergo, Consul-General d'Italie, for Canada, and the Hon. K. Boissevain, Consul-General for the Netherlands, at Montreal.

DISCUSSION.

Mr. W. F. Durfee.—This paper is a very interesting one indeed, and the author is entitled to our thanks for bringing such interesting historical matter before the Society. In 1872 I heard the late Joseph Harrison deliver a lecture before the Franklin Institute on boiler construction, in which he said that he had seen in a museum at Naples a boiler made about two thousand years ago in which tubes were arranged vertically, precisely the same as in the modern vertical tubular boiler. Quite recently I have seen in some of the technical journals reference to an excavation which had just been made on some private grounds near Pompeii, in which it was claimed that very large boilers were discovered. Very few details were given with this statement. If one of the boilers described in the paper was cast whole, as is stated, the tubes must also have been cast with it, because they could not have been put in place in any other way without drilling holes through the sides of the boiler. If that boiler and its tubes were cast, it shows that the ancients were very expert founders. It would be rather difficult, even at the present day, to make a casting as complex as one of the boilers shown in this paper.

Mr. H. H. Suplee.—The subject of the boilers in the Naples Museum is one which is of interest to me because my attention was first directed to it many years ago in the following manner:

In his essay on the "Locomotive Engine," published in 1872, my uncle, the late Mr. Joseph Harrison, Jr., wrote, referring to the few remains of ancient mechanical engineering yet in existence:

"How interesting is the little that has come down to our time! The engineer, noting the curious things in bronze and copper exhumed at Pompeii and gathered together in the Museo Borbonico at Naples, will linger near a small vessel for heating water, a little more than a foot high, in which are combined nearly all the principles involved in the modern vertical steam boiler, fire box, smoke flue through the top, and fire door through the side, all complete; and, strange to say, this little thing has a water grate, made of small tubes crossing the fire box at the bottom, an idea that has been patented twenty times over, in one shape or another, within the period of the history of the steam engine."

Mr. Harrison had returned from his residence in Europe several years before he wrote this, and so I believe that the exhumation of the boiler to which he refers must have been more than thirty years ago. About a year ago I had the opportunity of visiting the Naples Museum, and, recollecting this passage, I made it a point to hunt up this boiler and to procure a photograph of it. It was readily found, and its construction agreed precisely with Mr. Harrison's description, and it is the one shown in Figs. 40, 41, and 42 of Mr. Bonner's paper.

I also had an opportunity of examining closely the little kitchen apparatus shown in Fig. 47 of the paper, and can add somewhat to the description of its construction.

Fig. 47 shows a little kitchen apparatus consisting of a water grate composed of tubes as in the previous example, the sides and bottom of the fire box elsewhere being double, with a water space communicating with the larger upright reservoir for water on the left. There is thus a complete anticipation of the modern range boiler with its water back for household uses, as well as the modern steam table used in hotels and restaurants for the purpose of keeping plates and food warm. The whole apparatus is about thirty inches long by twelve deep, as I recollect it, and shows evidence of most excellent and artistic workmanship.

According to my informant, a very intelligent attendant at the museum, these articles were found not at Pompeii, but at Herculaneum, and they are placed in the museum with the collection of Herculaneum bronzes.

DCCVII.*

METHOD OF DETERMINING THE WORK DONE DAILY BY A REFRIGERATING PLANT AND ITS COST.

BY FRANCIS H. BOYER, EAST CAMBRIDGE, MASS.

(Member of the Society.)

THE refrigerating plant in the abattoir of John P. Squire & Co., East Cambridge, Mass., was installed by the De La Vergne Refrigerating Machine Co. during the winter and spring of 1890 and 1891. It is composed of two machines, rated by the builders as 150 tons ice-melting capacity each daily, or a combined capacity of 300 tons, this to be accomplished by running 24 hours daily with a return pressure of 26 pounds above atmosphere, a condition of $40\frac{7}{10}$ pounds pressure absolute, running at 40 revolutions per minute. The size of the gas compressing cylinders was 16 inches in diameter and 32 inches stroke, being double acting, four gas cylinders all told.

The condition and amount of work being done is indicated by the back or return pressure of the gas—this condition being maintained by the speed of the gas pump—the engines being directly connected and constructed to allow of a variation of speed from 15 to 75 or more revolutions per minute.

It became desirable to establish a method to obtain the amount of work accomplished daily in order to arrive at the expense of operation, and to make comparison with results of other departments of the abattoir. By taking the cubic displacement of the compressors with a given amount of return pressure the amount was obtained easily.

The following is a copy of the engineer's logs for July 18, 1896:

---

* Presented at the New York meeting (December, 1896) of the American Society of Mechanical Engineers, and forming part of Volume XVIII. of the *Transactions*.

ENGINEER'S DAILY REPORT.

JOHN P. SQUIRE & CO. CORP., East Cambridge, Mass.

Department 24.

Date, *July* 18, 1896.

	ENGINE ROOM.									REFRIGERATOR TEMPERATURES.																BEEF HOUSE.				WATER CONDENSER.			WEATHER.		
	D. P.	R. P.	Revolutions.				Salt Water Column.	Steam.	Vacuum.	1	2	3	Ham Room.	4	Rib Room.	Hanging-Room.				6	7	Steam Lard.	Leaf Lard.	Oil Room.	Oil Cellar.	1	2	3	4	I.	C.	F.	Temp.	Conditions.	REMARKS.
			No. 1.	No. 2.	No. 3.	No. 4.										1	2	3	4																
7 A.M.	165	13	45	45	..	..	110	80	24½	41	41	41	33	39	33	38	36	33	33	42	38	51	47	..	42	39	35	33	33	67	76	102	68	Clear.	Turn gas on water tank 8 A.M.—*G. M. D.* Keep ham room normal.—*J. Crowley.* No. 3 room closed blower on temperature 48 degrees. Fire alarm test O.K. 8.30 A.M. " " " " 12 noon. Fire box 21 Somerville alarm 8.30 A.M., and out 8.45 A.M. (Signed) JAMES HIGGINS, *Engineer.* Start both coils in rib room Sunday 12 P.M.—*W. Lincoln.* (Signed) PAT FOLEY, *Engineer.*
8 "	170	13	45	45	..	..	100	80	24	..	..	..	....	..	..	39	36	34	33	..	..	..	..	..	..	..	..	..	..	67	77	105	70	......	
9 "	170	13	45	45	..	..	100	80	24	42	42	41	33	40	35	39	36	35	33	43	38	53	49	..	43	40	35	35	33	67	77	108	70	......	
10 "	170	14	45	45	..	..	100	80	24¼	..	..	..	....	..	..	39	36	36	33	..	..	..	..	..	..	..	..	..	..	67	77	116	78	......	
11 "	180	14	45	45	..	..	95	75	24	..	..	..	....	..		40	36	36	34	..	..	..	..	..	..	..	..	..	..	71	77	115	78	......	
12 "	180	15	45	45	..	80	95	80	23¾	42	42	41	35	40	35	42	87	36	36	43	38	54	49	..	43	38	35	35	33	72	77	115	76	......	
1 P.M.	180	15	45	45	..	..	95	80	23	..	..	..	....	..	..	42	37	36	36	..	..	..	..	..	..	..	..	..	..	73	77	114	75	......	
2 "	180	15	45	45	..	..	95	80	24	..	..	..	....	..	..	42	37	36	36	..	..	..	..	..	..	..	..	..	..	71	78	114	75	......	
3 "	180	15	45	45	..	..	95	80	24	42	42	41	36	40	37	42	37	36	36	43	38	54	49	..	43	36	34	34	33	72	79	117	73	......	
4 "	180	14	45	45	..	..	95	80	24	..	..	..	....	..	..	40	87	36	36	..	..	..	..	..	..	..	..	..	..	70	81	121	72	......	
5 "	175	13	45	45	..	..	95	80	24	..	..	..	....	..	..	40	36	36	36	..	..	..	..	..	..	..	..	..	..	68	80	115	72	......	
6 "	175	13	45	45	..	..	95	80	24½	42	42	42	34	40	36	39	36	36	36	43	38	55	51	..	44	36	34	34	34	67	78	112	72	......	
7 "	170	12	45	45	..	..	100	80	25	..	..	..	....	..	..	39	36	36	37	..	..	..	..	..	..	..	..	..	..	67	78	113	71	......	
8 "	170	11	45	45	..	80	100	80	25	..	..	..	...	..	..	39	36	36	37	..	..	..	..	..	..	..	..	..	..	67	78	114	69	......	
9 "	165	10	45	45	..	80	95	80	25	..	..	..	....	..	..	39	36	36	37	..	..	..	..	..	..	..	..	..	..	67	78	115	68	......	
10 "	165	10	36	36	..	80	95	80	25	41	41	42	34	40	36	38	36	36	37	42	38	54	50	..	43	34	34	33	33	67	78	114	67	......	
11 "	165	10	36	36	..	80	95	80	25	..	..	..	....	..	..	38	35	35	36	..	..	..	..	..	..	..	..	..	..	68	78	115	66	......	
12 "	170	9	36	36	..	80	95	80	25	..	..	..	....	..	..	38	35	35	36	..	..	..	..	..	..	..	..	..	..	69	79	114	65	......	
1 A.M.	170	9	36	36	..	80	95	80	25	..	..	..	....	..	..	37	35	35	36	..	..	..	..	..	..	..	..	..	..	70	79	113	64	......	
2 "	170	11	36	36	..	80	95	80	25	42	42	42	34	40	36	37	35	35	35	42	38	50	46	..	43	34	32	32	32	70	80	118	62	......	
3 "	170	12	36	36	..	80	95	80	25	..	..	..	....	..	..	36	34	34	34	..	..	..	..	..	..	..	..	..	..	70	80	117	61	......	
4 "	165	12	36	36	..	80	90	80	25	..	..	..	..	..	..	36	34	34	34	..	..	..	..	..	..	..	..	..	..	69	79	116	60	......	
5 "	165	13	36	36	..	80	90	80	25	..	..	..	....	..	..	36	34	34	34	..	..	..	..	..	..	..	..	..	..	69	78	117	59	......	
6 "	165	13	36	36	..		95	80	25	..	..	..	....	..	..	35	34	34	34	..	..	..	..	..	..	..	..	..	..	68	78	116	63	......	

Engines Hours Run.

No. 1.	27,339	24	27,363
" 2.	27,935	24	27,959
" 3.			
" 4.	9,593	10	9,603
" 5.	1,068		1,068

Boilers Hours Run.

No. 1.	25,778		25,778
" 2.	21,739	24	21,763
" 3.	21,644	24	21,668
" 4.	21,269		21,269
" 5.	24,024	24	24,048
" 6.	22,542	24	22,542
" 7.	16,644	24	16,648
" 8.	23,523		23,523

Coal Receipts.

Pocahontas.
9,110 pounds.
9,480 "
9,800 "
8,490 "

36,880 pounds.

Daily Tons Refrigeration.

$$\frac{48}{24} \times \frac{40\frac{6}{10}}{40} \times \frac{12\frac{4}{10} + 14.7}{26 + 14.7} \times \frac{150}{1} = 145\tfrac{3}{10} \text{ tons,}$$

from absolute pressure.

Salt Water Counter.

No. 1.	603,484
" 2.	237,642

Gallons to date.

1,357,600 } to-day.
964,300 }
2,321,900 "
32,634,300 to date for July.
34,956,200 total for 18 days in July.

FIG. 49.—ENGINE ROOM OF THE JOHN P. SQUIRE & CO.

"D. P." indicates direct pressure, or pressure at which the ammonia gas is being liquefied.

"R. P." indicates return or suction pressure—all pressures starting at atmosphere.

"Engines No. 1 and 2" are refrigerating engines.

"Engine No. 4" is a 200 horse-power electric-light engine.

"Engine No. 5" is an air compressor for testing car brakes.

"Salt-water column" is expressed in feet of hydrostatic pressure. It is pumped 1,800 feet through a 12-inch cast-iron pipe, steam being conducted under the ground. Water being taken from the bay, therefore being salt water. The water is first used to condense ammonia, and finally to condense the steam in a Wheeler's 1,000 horse-power surface condenser.

In "Water Condenser" columns.

"I" — initial temperature to ammonia condensers.

"C" — temperature of water on entering steam condenser.

"F" — final temperature of water leaving steam condenser.

"Engines Hours Run" indicates the number of hours the engines have run from the time they started. This I find quite an important item, as engine drivers are apt to become prejudiced against one or the other engine where one engine remains idle, as it does in this case during the cold winter days.

"Boilers Hours Run." Indication same as engine.

"Remarks" come in shape of instructions from department superintendents, test, and fire alarms.

The engine had run from 7 A.M. to 10 P.M. at 45 revolutions per minute, during which time between 2,000 and 3,000 hogs had been slaughtered and placed in the "hanging-room" for cooling, which has a floor space of about one acre, or, to be exact, 42,240 square feet. Rooms No. 1, 2, 3, 4, 6, and 7 have the same floor area. The temperature of the hanging-room increased from 38 and 33 at 7 A.M. to 42 and 36 degrees Fahrenheit at 2 P.M. At this time the most severe work was being done by the machinery. This is shown by the return pressure of the gas being at 15 pounds, and the direct pressure at 180 pounds per square inch. As the temperature in the hanging-room decreases so does the work on the engines. Reference will be made only to the hanging-room, as there is where most of the work comes from. Rooms No. 1, 2, 3, 4, 6, and 7 are used for curing and storage purposes, and work coming from there comes from heat radiating from workmen, from lights, from decomposition in process of curing, and from imperfect insulation. From the last source there is but little trouble, as the building has few windows, no hallway or elevators, no communication between floors, and brick walls 48 inches thick.

As the coils circulating the ammonia become cold, and the unexpanded liquid returns to the engine, the attendant reduces the supply. This first makes its appearance from 7 to 9 o'clock P.M., and at 10 P.M. the volume of return pressure of gas has become so low that the attendant has slowed down the machines from 45 to 36 revolutions per minute, and at this condition the work is kept up until 7 A.M. the following morning. At 2 A.M. there is an increase of a return pressure, which continues until 7 A.M.; this is caused by a gang of about 100 workmen beginning at 1 A.M.

A little story is told in the Water Condenser column in the initial column marked "I."

At 7.00 A.M. the temperature........................ 67 degrees.
" 1.00 P.M. " " .... 73 "
" 8.00 P.M. " " .... 67 "
" 2.00 A.M. " " .... 70 "
" 6.00 A.M. " " .... 67 "

This is due to the condition of the tides, the coldest water coming at high water, and warm at low water. Here we find that our thermometer gives us a correct reading of conditions of the tides, clearly defining high and low water.

The object of this paper is to ascertain the amount of work done daily under these varying conditions. Under the heading of "Daily Tons of Refrigeration" is the following:

$$\frac{48}{24} \times \frac{40\frac{6}{10}}{40} \times \frac{12\frac{4}{10} + 14.7}{26 + 14.7} \times \frac{150}{1} = 145\tfrac{2}{10} \text{ tons,}$$

$\frac{48}{24}$ being the number of hours' service which the engines have done.

$40\frac{6}{10}$ is the average number of revolutions for the day; 40 being a fixed number of revolutions necessary to establish a given result of effort.

$12\frac{4}{10}$ is the average return pressure of the gas from the refrigerator.

Twenty-six pounds per square inch is the fixed pressure for a given result, 150 being the rated capacity of the machines when the fixed conditions are maintained; or we should have as a fixed formula:

$$\begin{array}{ccccccc} \text{Hours.} & & \text{Revolutions.} & & \begin{array}{cc}\text{Return Pressure} & \text{Atmospheric Pressure.}\end{array} & & \text{Tons Refrigerating.} \\ \dfrac{\qquad}{24} & \times & \dfrac{\qquad}{\cdot 40} & \times & \dfrac{\qquad + \; 14.7}{26 \; + \; 14.7} & \times & \dfrac{150}{1} \end{array}$$

Average varying being daily entered.

To prove the statement is an easy matter by taking the weight of the condensing water from the ammonia condensers, also the oil cooler; and multiplying by the heat units wille stablish the amount of heat being given. I will not attempt to go into detail, as this is already on record in the Society's works in the able paper on Refrigerating Machinery by Professor Denton, vol. x., page 792.

In determining the cost of operating several tests had been made on the boiler and engine plant, which showed an average of $10\frac{4}{10}$ pounds of water vaporized per pound of coal consumed—Pocahontas coal from Virginia being used—and with an efficiency of $16\frac{44}{100}$ pounds of steam per hour per horse-power, or $1\frac{56}{100}$ pounds of coal per hour per horse-power. From this data is established the amount to be charged to electric light, and to car department for the air compressor for testing air brakes.

The total amount of expense for operating is taken monthly from the store-room accounts; from the year 1894 we have the following:

Tons of refrigerating produced	$48,466\frac{1}{2}$
Cost of maintaining refrigerating department, including annual repairs	$28,471 03
Average cost per ton for refrigeration for 1894	$58\frac{7}{10}$ cts.

An interesting feature of the monthly production and cost per ton of refrigerating is shown as follows:

1894.	Tons.	Cost per Ton.
January	1,816	85 cents.
February	1,423	86 "
March	$1,538\frac{3}{10}$	83 "
April	$2,821\frac{7}{10}$	73 "
May	$4,747\frac{3}{10}$	46 "
June	$5,491\frac{7}{10}$	38 "
July	$6,736\frac{4}{10}$	31 "
August	$7,596\frac{6}{10}$	27 "
September	$6,283\frac{4}{10}$	24 "
October	$5,419\frac{5}{10}$	52 "
November	$2,647\frac{5}{10}$	78 "
December	$1,945\frac{1}{10}$	82 "

DISCUSSION.

Mr. George Richmond.—The significance of data derived from practical observations of refrigerating machinery and experience with it is so important to those who desire to study this subject, and these are, moreover, comparatively so rare, that this Society is indebted to any one who will furnish a record of observations.

In the present instance such a record is accompanied by an interpretation of the results, and it is thought that some intimation should have been given as to the degree of accuracy of the formula used for determining the capacity of the machine. This is a sort of rule of three, very simple in form, but making two assumptions—namely, that the capacity of the machine is proportional to the gauge pressure of the suction side, and that the rated capacity as given by the maker represents a physical constant. The calculation of the capacity of a compressor is so simple a matter as to render unnecessary approximations which deprive the results of all significance.

Mr. Boyer.—In writing this paper we are governed by the fact that there are no existing data—at least not to my knowledge—giving formulas to be used. In regard to the question of 26½ pounds back pressure above the atmosphere producing a result of 150 tons when so many cubic inches of gas had been expelled, I must say that this is something that I am not myself familiar with; and I do not know from my own knowledge that that is true. But that has been determined by the De La Vergne Company, and it is upon that basis that they make their contracts. If you go to them to-morrow to buy a machine for any given amount, and you buy 300-ton, or whatever capacity of machine you might purchase, they would base the work done at a return pressure with a volume giving 26½ pounds pressure to the square inch; now that is the density with which the cylinder is filled. The discharge pressure has nothing to do with that and is not taken into consideration. But it is the return pressure coming back that gives the amount of the work being done.

I am willing to admit that this paper is open to very severe criticism, but I think that it brings forth, so far as my knowledge goes, a question which I have not seen treated, and I am in hopes of bringing out from persons more competent than I am a discussion of how to measure and get an accurate report of the flexible conditions of working machinery of this character.

DCCVIII.*

CALIBRATION OF A WORTHINGTON WATER METER.

BY JOHN A. LAIRD, ST. LOUIS, MO.
(Member of the Society.)

It is the intention of the writer to give the Society the results of a series of meter calibrations which extend over more time than any which have been published in the *Transactions*, and were as carefully taken.

The meter tested was a Worthington made entirely of brass, for hot water, and bought for testing purposes. It was used to measure the feed water during the two thirty-day duty tests on the Allis engines at the Chain of Rocks pumping station, St. Louis.

The general arrangement of meter, piping, and tanks is shown on the accompanying sketch (Fig. 50). Ordinarily the water goes from *A* to *B*, which is a part of the regular feed pipe. If we are metering the water, *E*, *F*, *H*, and *D* are opened, and *C*, *I*, and *G* closed. This by-passes the water through the meter.

When a meter test is to be made, *G* is opened and three-way *F* is thrown so as to send water to tanks. Three-way *J* is first thrown so as to turn water into tank No. 1, *H* is closed, and *I* opened. Water in the suction tank is brought to the zero mark, the meter is read. When tank No. 1 is full, three-way *J* is turned, throwing water into No. 2, the auxiliary feed pump is started at its regular speed, and the test goes on for as long a period as may be desired.

When closing test, the last tank is run into the suction tank rapidly enough to insure having the water above the zero mark, the pump is run until the water is at the mark, when it is stopped, and the meter read. During the test the thermometer at *K* is read every ten minutes, but not recorded unless the change is a full degree.

---

*Presented at the New York meeting (December, 1896) of the American Society of Mechanical Engineers, and forming part of Volume XVIII. of the *Transactions*.

DISCUSSION.

Mr. George Richmond.—The significance of data derived from practical observations of refrigerating machinery and experience with it is so important to those who desire to study this subject, and these are, moreover, comparatively so rare, that this Society is indebted to any one who will furnish a record of observations.

In the present instance such a record is accompanied by an interpretation of the results, and it is thought that some intimation should have been given as to the degree of accuracy of the formula used for determining the capacity of the machine. This is a sort of rule of three, very simple in form, but making two assumptions—namely, that the capacity of the machine is proportional to the gauge pressure of the suction side, and that the rated capacity as given by the maker represents a physical constant. The calculation of the capacity of a compressor is so simple a matter as to render unnecessary approximations which deprive the results of all significance.

Mr. Boyer.—In writing this paper we are governed by the fact that there are no existing data—at least not to my knowledge—giving formulas to be used. In regard to the question of 26½ pounds back pressure above the atmosphere producing a result of 150 tons when so many cubic inches of gas had been expelled, I must say that this is something that I am not myself familiar with; and I do not know from my own knowledge that that is true. But that has been determined by the De La Vergne Company, and it is upon that basis that they make their contracts. If you go to them to-morrow to buy a machine for any given amount, and you buy 300-ton, or whatever capacity of machine you might purchase, they would base the work done at a return pressure with a volume giving 26½ pounds pressure to the square inch; now that is the density with which the cylinder is filled. The discharge pressure has nothing to do with that and is not taken into consideration. But it is the return pressure coming back that gives the amount of the work being done.

I am willing to admit that this paper is open to very severe criticism, but I think that it brings forth, so far as my knowledge goes, a question which I have not seen treated, and I am in hopes of bringing out from persons more competent than I am a discussion of how to measure and get an accurate report of the flexible conditions of working machinery of this character.

holds the water for about ten minutes' run, in the neighborhood of one thousand pounds. Scales were read to the nearest pound, and were tested several times during the sixty days with United States standard weights.

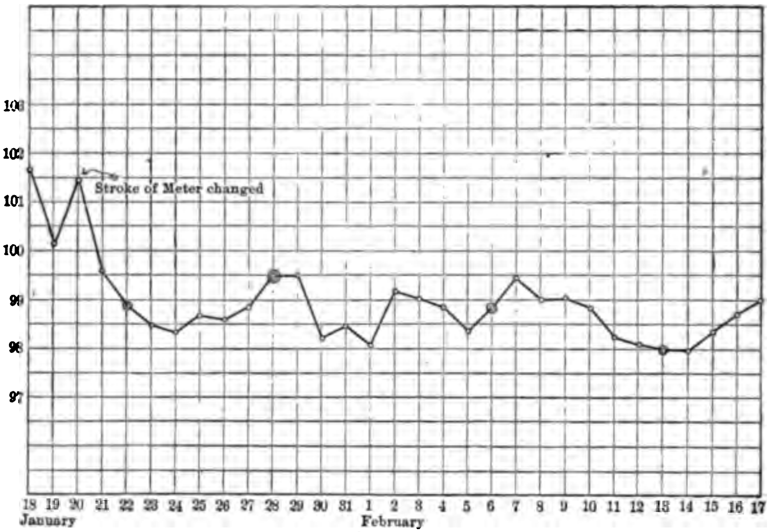

DIAGRAM OF
METER CORRECTION FOR 30 DAY TEST
Low service Engine No. 6.

FIG. 51.

There is appended herewith a copy of one of the daily tests. The formula used to compute the correction is $\frac{W}{w\,M} = C$, where

W = total water weighed in pounds.

w = weight of one cubic foot of water at observed temperature.

M = cubic feet registered on meter.

The computed corrections are shown plotted on two sheets herewith. The daily tests are denoted by small circles, the twelve-hour tests by two, and the twenty-four-hour tests by three, concentric circles.

When, upon finishing a daily test, considerable variation was shown between the computed correction and that of the previous day, a check test was run very carefully, and if the two came reasonably close together, the first was taken as the cor-

After the meter is read, the feed pump is started again, and water which was taken out of the system is pumped in by

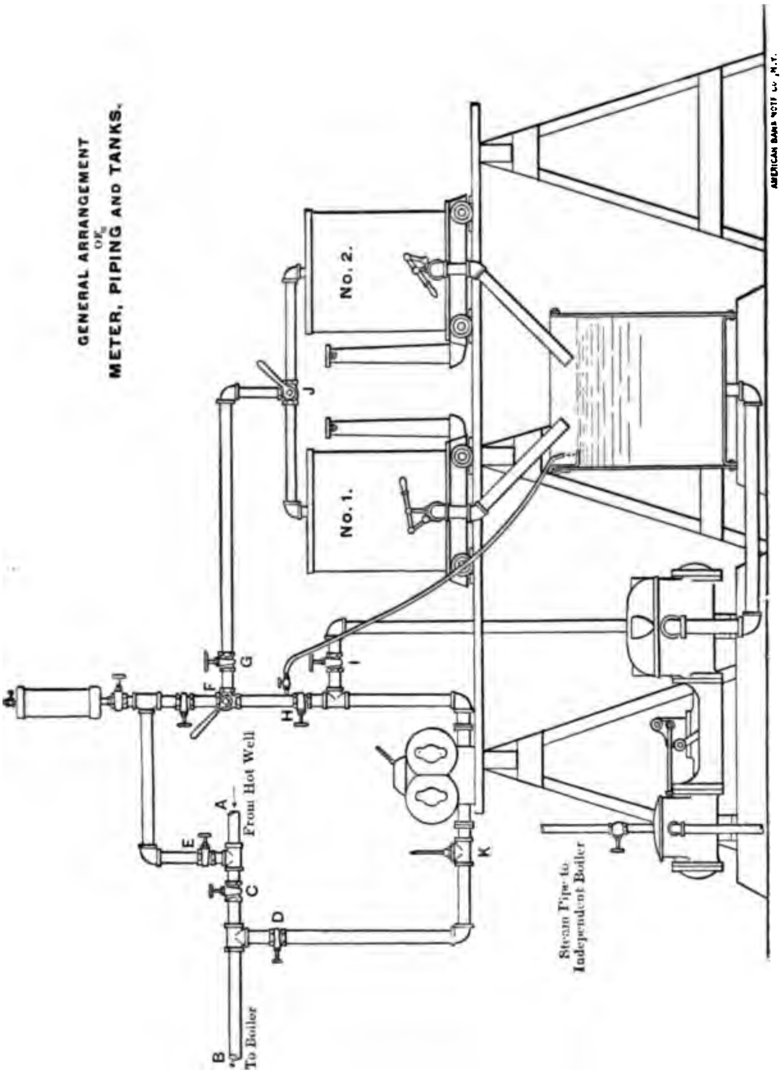

FIG. 50.

speeding the pump a little ; valves are changed, throwing water directly through meter, and the test is over. During the test any leakage through the gate valve *H* is carried back to the suction tank by means of the small hose shown. One tank holds the water for about ten minutes' run, in the neighborhood of one thousand pounds. Scales were read to the nearest pound, and were tested several times during the sixty days with United States standard weights.

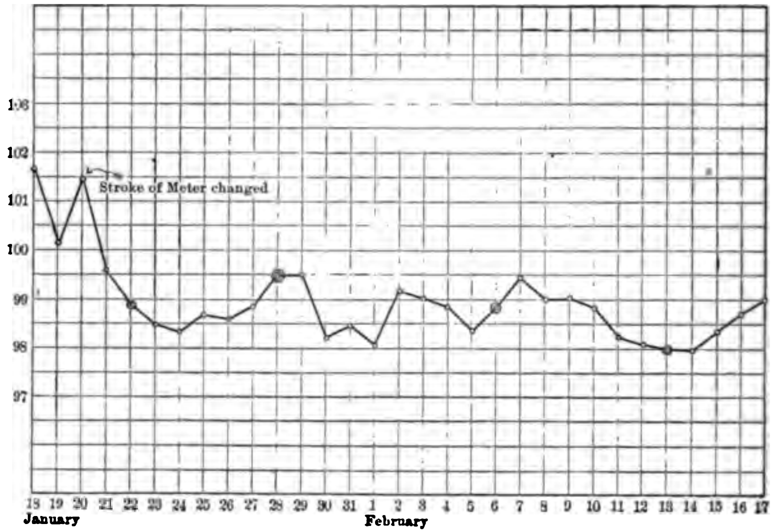

DIAGRAM OF

METER CORRECTION FOR 30 DAY TEST

Low service Engine No. 6.

FIG. 51.

There is appended herewith a copy of one of the daily tests. The formula used to compute the correction is $\frac{W}{w\,M} = C$, where

W = total water weighed in pounds.

w = weight of one cubic foot of water at observed temperature.

M = cubic feet registered on meter.

The computed corrections are shown plotted on two sheets herewith. The daily tests are denoted by small circles, the twelve-hour tests by two, and the twenty-four-hour tests by three, concentric circles.

When, upon finishing a daily test, considerable variation was shown between the computed correction and that of the previous day, a check test was run very carefully, and if the two came reasonably close together, the first was taken as the cor-

COMPUTATION OF METER ERROR.

DATE.		CUBIC FEET BY METER.	TEMPERATURE OF WATER.	WEIGHT OF CUBIC FEET AT TEM'URE.	WEIGHT OF WATER PASSING METER.	PER CENT. CORRECTION.	PER CENT. ERROR.
Jan.	18	191.4	85.0°	62.18	12,102	1.016	+ 1.6%
	19	184.1	82.0	62.21	8,854	1.001	+ 0.1
	20	272.5	81.8	62.21	17,197	1.014	+ 1.4
	21	276.0	81.5	62.21	17.096	.995	– 0.5
	22	1016.4	67.5	62.33	62,648	.989	– 1.1
	23	277.6	76.3	62.27	17,024	.984	– 1.6
	24	299.3	70.1	62.31	18,338	.984	– 1.67
	25	276.9	76.8	62.26	17,010	.987	– 1.3
	26	282.8	76.7	62.26	17,359	.986	– 1.4
	27	261.8	79.0	62.24	16,074	.988	– 1.2
	28	2052.8	70.2	62.31	127,244	.995	– 0.5
	29						
	30	295.0	77.7	62.25	18,036	.982	– 1.8
	31	327.1	77.2	62.26	20.052	.985	– 1.5
Feb.	1	246.5	82.2	62.21	15.039	.981	– 1.9
	2	277.1	84.2	62.19	17,065	.991	– 0.9
	3	278.4	81.3	62.22	17.149	.990	– 1.0
	4	279.8	79.4	62.24	17,178	.988	– 1.2
	5	297.9	76.4	62.27	18,243	.983	– 1.7
	6	996.4	76.4	62.27	61,322	.988	– 1.2
	7	294.5	79.1	62.24	18,221	.994	– 1.6
	8	213.4	80.2	62.23	13,145	.990	– 1.0
	9	280.1	81.6	62.21	17.250	.990	– 1.0
	10	273.8	86.0	62.17	16.819	.988	– 1.2
	11	279.4	88.7	62.19	17,063	.982	– 1.8
	12	280.7	87.3	62.16	17,109	.980	– 2.0
	13	990.7	74.6	62.28	60,446	.979	– 2.1
	14	267.2	81.2	62.22	16,287	.979	– 2.1
	15	280.3	96.8	62.06	17,100	.983	– 1.7
	16	279.3	81.6	62.21	17,146	.987	– 1.3
	17	277.7	79.2	62.24	17,107	.989	– 1.1
	26	271.8	82.0	62.21	17,032	1.007	+ 0.7
	27	294.8	81.6	62.21	18,368	1.002	+ 0.2
	28	293.6	84.2	62.19	18,366	1.006	+ 0.6
	29	569.6	70.3	62.31	35,541	1.001	+ 0.1
March	1	280.4	78.7	62.24	17.303	.994	– 0.6
	2	278.1	85.0	62.18	17,300	1.000	
	3	277.0	83.5	62.19	17,284	1.003	+ 0.3
	4	279.7	87.0	62.16	17,474	1.005	+ 0.5
	5	280.7	92.3	62.11	17,625	1.011	+ 1.1
	6	1002.6	77.4	62.26	62,877	1.007	+ 0.7
	7	309.2	83.9	62.19	19,441	1.011	+ 1.1
	8	278.1	85.5	62.17	17,477	1.011	+ 1.1
	9	245.8	87.0	62.16	15,118	.989	– 1.1
	10	284.6	91.6	62.11	18,119	1.025	+ 2.5
	11	288.1	85.3	62.18	18,108	1.011	+ 1.1
	12	991.6	80.2	62.23	62,431	1.012	+ 1.2
	13	254.7	88.6	62.14	16,118	1.018	+ 1.8
	14	589.7	86.6	62.16	37,209	1.015	+ 1.5
	15	402.0	88.6	62.19	25,800	1.012	+ 1.2
	16	449.8	81.8	62.21	28,321	1.012	+ 1.2
	17	995.6	76.3	62.27	62,789	1.013	+ 1.3
	18	458.8	82.5	62.20	28.571	1.001	+ 0.1
	19	440.4	84.4	62.19	27,466	1.003	+ 0.3
	20	552.6	83.0	62.20	34,298	.998	– 0.2
	21	442.2	85.7	62.17	27,435	.998	– 0.2
	22	410.3	80.1	62.23	25,191	.987	– 1.3
	23	431.9	82.9	62.20	26.666	.993	– 0.7
	24	428.9	81.8	62.21	26,482	.994	– 0.6
	25	395.9	82.2	62.21	24,446	.993	– 0.7
	26	1944.0	77.1	62.26	119,891	.991	– 0.9

METER TEST LOG.

LOW SERVICE ENGINE NO. 7.

Observers { E. A. Bentley.
S. Gibson.

March 10, 1896.

No.	TIME.	TEMP.	GROSS. LBS.	TARE. LBS.	NET. LBS.	TOTAL. LBS.	METER READING.	REMARKS.
1	9.26	90°	1,352	348	1,004		3892.8	Cubic feet.
2			1,452	447	1,005			
1			1,370	348	1,022			
2			1,451	446	1,005			
1			1,350	348	1,002			
2			1,449	446	1,002			
1			1,358	346	1,010			
2			1,454	446	1,008			
1			1,352	348	1,004			
2		93	1,463	446	1,017			
1			1,352	348	1,004			
2			1,451	446	1,005			
1			1,352	348	1,004			
2			1,453	446	1,007			
1			1,352	348	1,004			
2			1,452	446	1,006			
1			1,352	348	1,004			
2	12.51	92	1,452	446	1,006		4177.4	Cubic feet.
Ave.	T.	92				18,119	284.6	Cubic feet.

COMPUTATION OF METER ERROR.

DATE.	CUBIC FEET BY METER.	TEMPERATURE OF WATER.	WEIGHT OF CUBIC FEET AT TEM'URE.	WEIGHT OF WATER PASSING METER.	PER CENT. CORRECTION.	PER CENT. ERROR.
Jan. 18	191.4	85.0°	62.18	12,102	1.016	+ 1.6%
19	134.1	82.0	62.21	8,354	1.001	+ 0.1
20	272.5	81.8	62.21	17,197	1.014	+ 1.4
21	276.0	81.5	62.21	17,096	.995	− 0.5
22	1016.4	67.5	62.33	62.648	.989	− 1.1
23	277.6	76.3	62.27	17,024	.984	− 1.6
24	299.3	70.1	62.31	18,338	.984	− 1.67
25	276.9	76.8	62.26	17,010	.987	− 1.3
26	282.8	76.7	62.26	17,359	.986	− 1.4
27	261.3	79.0	62.24	16,074	.988	− 1.2
28	2052.8	70.2	62.31	127,244	.995	− 0.5
29	……	……	……	……	……	……
30	295.0	77.7	62.25	18,036	.982	− 1.8
31	327.1	77.2	62.26	20,052	.985	− 1.5
Feb. 1	246.5	82.2	62.21	15,039	.981	− 1.9
2	277.1	84.2	62.19	17,085	.991	− 0.9
3	278.4	81.3	62.22	17,149	.990	− 1.0
4	279.3	79.4	62.24	17,178	.988	− 1.2
5	297.9	76.4	62.27	18,243	.983	− 1.7
6	996.4	76.4	62.27	61,322	.988	− 1.2
7	294.5	79.1	62.24	18,221	.994	− 1.6
8	218.4	80.2	62.23	13,145	.990	− 1.0
9	280.1	81.6	62.21	17.250	.990	− 1.0
10	273.8	86.0	62.17	16.819	.988	− 1.2
11	279.4	88.7	62.19	17,063	.982	− 1.8
12	280.7	87.3	62.16	17,109	.980	− 2.0
13	990.7	74.6	62.28	60,446	.979	− 2.1
14	267.2	81.2	62.22	16,287	.979	− 2.1
15	280.3	96.8	62.06	17,100	.983	− 1.7
16	279.3	81.6	62.21	17,146	.987	− 1.3
17	277.7	79.2	62.24	17,107	.989	− 1.1
……	……	……	……	……	……	……
26	271.8	82.0	62.21	17,082	1.007	+ 0.7
27	294.8	81.6	62.21	18,368	1.002	+ 0.2
28	293.6	84.2	62.19	18,366	1.006	+ 0.6
29	569.6	70.3	62.31	35,541	1.001	+ 0.1
March 1	280.4	78.7	62.24	17.363	.994	− 0.6
2	278.1	85.0	62.18	17,300	1.000	……
3	277.0	83.5	62.19	17.284	1.008	+ 0.8
4	279.7	87.0	62.16	17,474	1.005	+ 0.5
5	280.7	92.3	62.11	17.625	1.011	+ 1.1
6	1002.6	77.4	62.26	62,877	1.007	+ 0.7
7	309.2	83.9	62.19	19,441	1.011	+ 1.1
8	278.1	85.5	62.17	17,477	1.011	+ 1.1
9	245.8	87.0	62.16	15,118	.989	− 1.1
10	284.6	91.6	62.11	18,119	1.025	+ 2.5
11	288.1	85.3	62.18	18,108	1.011	+ 1.1
12	991.6	80.2	62.23	62,431	1.012	+ 1.2
13	254.7	88.6	62.14	16.113	1.018	+ 1.8
14	589.7	86.6	62.16	37,209	1.015	+ 1.5
15	402.0	88.6	62.19	25,300	1.012	+ 1.2
16	449.8	81.8	62.21	28,321	1.012	+ 1.2
17	995.6	76.3	62.27	62.789	1.013	+ 1.3
18	458.8	82.5	62.20	28.571	1.001	+ 0.1
19	440.4	84.4	62.19	27,466	1.008	+ 0.3
20	552.6	88.0	62.20	34,298	.998	− 0.2
21	442.2	85.7	62.17	27,435	.998	− 0.2
22	410.3	80.1	62.23	25.191	.987	− 1.3
23	431.9	82.9	62.20	26.666	.993	− 0.7
24	428.9	81.8	62.21	26.482	.994	− 0.6
25	395.9	82.2	62.21	24.446	.998	− 0.7
26	1944.0	77.1	62.26	119,891	.991	− 0.9

DISCUSSION.

Mr. John Thomson.—If the author of this paper had strictly confined himself to carrying out the programme specified in the opening clause, namely, "to give the Society results," there would have been less room for adverse criticism; but as he has drawn a conclusion not warranted by the data presented, it may be well to point out a few of the discrepancies.

First. The size of the meter is not stated.

Second. The maximum rate of discharge is not stated, except inferentially at top of page 136, where it appears that 1,000 pounds of water is run in "about ten minutes"; this being equal to, say, 1.6 cubic feet a minute. For a $\frac{5}{8}$-inch Worthington meter this would be rather a high rate for close work; for a $\frac{3}{4}$-inch it would be about right, but for a 1-inch rather low.

Third. It does not appear at what rate the meter was operated when in actual use, except that from the table on page 138 it is stated that 284.6 cubic feet were run in three hours and twenty-five minutes, or equalling an average rate of 1.38 cubic feet a minute.

Fourth. Nor is it stated whether the meter was tested for accuracy at different rates of delivery.

Fifth. Neither does it appear that the meter on duty was liable to operate under a wide range in rate of delivery.

The omission of these elements would preclude any one from duplicating the conditions of this test in the hope of duplicating the results. To correct this the size of the meter ought to be given; as also its rate of delivery and its extreme variations, high and low, in rate, cubic feet per minute.

What was the object, may I ask, of letting the air out of the meter "at least every eight hours"? Was it also lubricated?

I quite agree with the author in his closing words, "that by careful calibration results could be obtained with the Worthington meter which would not be more than one-half of one per cent. in error"; and to this I add that the same result can be obtained from at least a dozen other meters if by "careful calibration" it is meant that the meter is to be run at a fairly uniform rate of delivery, with, as in this case, filtered water and even omitting the pneumatic relief. But I infer that this opinion is based upon the *average* of the percentage of error of the several tests as recorded in the table on page 139, by which the fifty-nine observations indicate a registration by the meter of 100.4 per cent. To the well-worn truism that averages are deceitful, deceiving, and altogether uncertain this table aforesaid is added testimony. Thus, in a total of thirty-six indications (marked minus on the table, to which reference will be made later) the average quantity indicated by the meter is 101.2 per cent. Again, in a total of but twenty-three "plus" indications, the average is 99.0 per cent. Now nearly all of the minus and plus records were in sequence; hence if one observer had *happened* to use the meter in, say, February, it would have been over one per cent. plus; if another observer had employed it in March, it would have about one per cent. minus; *difference*, this time, over two per cent. As a matter of fact, between the observations of February 14 and March 10 the *difference* is 4.6 per cent.

Judging from these considerable fluctuations in the record, it is my opinion that the author of this paper is not justified in the conclusion which he applies as to the accuracy of the particular meter tested; and if he is to repeat such a test, with the same outfit illustrated, I would recommend him to provide a very ample air chamber to his feed pump and see to it that the air is left in it; as under conditions of greater constancy of pressure, analogous to that of a *gravity* supply, I believe his meter will perform more uniformly than is here recorded, if the rate of delivery is fairly uniform and favorable to the meter.

I call attention to errors in placing the plus and minus signs in table, page 139; in every case they should be reversed. Two instances will suffice by way of proof. Thus, at the head of the table, 191.4 × 62.18 = 11,901.25 pounds of water *registered* by the meter, while the quantity of water weighed is 12,102; hence, 12,102 – 11,901.25 = 100.75 pounds *less* by the meter than by the reference of accuracy. Consequently the meter indicates minus, and not plus as printed. Again, in the observation of January 30th, 295 × 62.25 = 18,363.75 pounds by the register of meter to 18,036 pounds by the reference of value. Hence, 18,363.75 – 18,036 = 327.75 pounds *more* by meter than by tank; the meter being plus, not minus. This error, by the way, is so common among water-works superintendents that I presumed to point it out in a paper presented to the New England Water Works Association,* and to then observe as I do now that all such uncertain-

---

* "Uniformity of Methods In Testing Water Meters." *Journal of New England Water Works Association*, vol. x., No. 2, December, 1895.

ties would be done away with if, instead of recording the error plus or minus, such columns be marked "Quantity in Percentage Indicated by Meter" and the tally be made accordingly. In this wise the aforesaid observations of January 18 and 30 would be correctly recorded, respectively as 98.4 and 101.8 per cent.

In closing, I also presume to observe that in the present state of the art with respect to water meters and platform scales it is simply a waste of time and effort to take account of variations of less than 10 degrees in temperature whereby to carry out differences in weight of water, so found, in that such refinements are microscopic as compared to the probable error of the apparatus itself. Thus the change in volume due to the entire range in temperature, about 25 degrees, applied to the total quantity, about 25,000 cubic feet, would make an error of but approximately one-third of one per cent. And yet the degrees are recorded in tenth parts of one. To search for "the last place of decimals" in the calibration of a commercial water meter is not even worthy of commendation for the intention.

*Mr. John A. Laird.**—I am very much obliged to Mr. Thomson for calling attention to certain data required to carry out original programme.

First. The meter was a 1¼-inch Worthington.

Second. There was practically no maximum discharge. It was running at almost a uniform rate, as the tables below will show:

Date.	Total water through meter, cubic feet.	Date.	Total water through meter, cubic feet.
Jan. 18	998 (12 hours)	Feb. 3	2,022
19	2,042	4	2,019
20	1,977	5	2,018
21	2,043	6	2,000
22	2,040	7	1,993
23	2,056	8	2,012
24	2,057	9	2,004
25	2,071	10	2,025
26	2,093	11	2,018
27	2,061	12	2,026
28	2,041	13	2,011
29	2,070	14	1,929
30	2,074	15	1,907
31	2,049	16	1,926
Feb. 1	2,049	17	954 (12 ho[illegible]
2	2,050		

---

*Author's closure, under the Rules.

And on the second engine test:

Date.	Total water through meter, cubic feet.
Feb. 26	1,003 (12 hours)
27	2,040
28	2,043
29	2,022
Mar. 1	1,964
2	1,962
3	1,956
4	1,948
5	1,961
6	1,993
7	1,984
8	1,945
9	1,981
10	1,965
11	1,985 (24 hours)
12	2,003
Mar. 13	1,999
14	2,043
15	1,955
16	1,934
17	2,031
18	2,057
19	2,054
20	2,027
21	2,055
22	2,047
23	2,127
24	2,044
25	1,988
26	1,957
27	991 (12 hours)

The speed of the auxiliary feed pump was always regulated so as to take the water just as fast as it came from the attached feed pump.

By taking any single quantity in the above table and dividing by 1,440 you will get very near the 1.38 cubic feet per minute which Mr. Thomson figures from a sample of daily tests, the maximum rate being 1.47 and the minimum 1.33.

It looks very much as though he is mistaken as to the intention of the work at hand. We were not testing the meter; we were testing the pumping engine and only calibrating the meter. It is not at all probable that a feed-water meter on a pumping engine duty test would be called upon to "operate under a wide range in rate of delivery."

Trying the meter for air in body, once a watch, was a refinement which certainly did no harm and may have done some good.

There was a very ample air-chamber provided on the feed pipe, and fitted with a glass water gauge.

I am very glad that Mr. Thomson agrees with the conclusion as to results obtainable with Worthington meters, and will agree with him that "there are others." But the inference that the conclusion was reached by averaging all the results is entirely erroneous, and his worn-out truism does not *happen* to fit.

He has jumped at another conclusion when he takes it for granted that one observer obtained all the plus corrections and another all the minus. As a matter of fact there were three observers, who were changed each week. The first week the meter was calibrated by Mr. Hoffman, the second week by Mr. Bentley, the third week by Mr. Baker and the fourth by Mr. Hoffman. And so in rotation.

Regarding the so-called error in signs, it is quite probable that the manner of designating suggested by Mr. Thomson would be better, but the one used is the common method.

DCCIX.*

A TWO-HUNDRED-FOOT GANTRY CRANE.

BY JOHN W. SEAVER, CLEVELAND, O.
(Member of the Society.)

In the latter part of the year 1895, the Cambria Iron Company, of Johnstown, Pa., decided to construct a storage and loading yard for their proposed new structural mill at Johnstown, Pa., and invited several engineering firms to submit estimates and designs for a plant to handle the material that it was intended to store and load in this yard.

Among the firms invited to submit proposals, that with which the writer is connected took up the matter at once, and gave it a great deal of very careful study. The yard it was designed to cover—400 by 800 feet—was so large that it was evident from the beginning that unless some very economical form of construction should be proposed, the expense of covering the area would be very great. There are several methods by which the desired object can be attained, and each plan was carefully considered and its objections and advantages compared.

A very simple way of covering any area is by the use of stationary derricks with swinging jibs. This, while probably the cheapest construction, is at the same time the most objectionable, on account of its requiring a large number of derricks to cover the surface. In fact, swinging derricks cannot be arranged so as to cover the whole yard, as there is necessarily a considerable area around the foot of the derrick that is unavailable. These objections caused this plan to be dismissed.

The next plan that was considered was a system of surface tracks, between which the material to be stored would be piled, and on these tracks a number of locomotive cranes could be placed. Two of the objections against the plan of a stationary derrick system could very properly be raised against this second

---

* Presented at the New York meeting (December, 1896) of the American Society of Mechanical Engineers, and forming part of Volume XVIII. of the *Transactions*.

plan with even greater force, as the tracks upon which the locomotive cranes would travel would occupy a very large portion of the yard. The locomotive cranes would be very expensive, and their range of length of jib is quite limited.

A third form of construction, and one that seemed to offer several advantages over the first two plans, consisted in a series of overhead tracks, running parallel to the length of the yard, and mounted on these tracks were to be a number of overhead travelling cranes of the ordinary type. Against this plan could be urged the fact that the supports themselves would take up more or less room, and the foundations, columns, and stringers for these supports would be very expensive, as it was proposed to make the cranes of exceptionally long span (100 feet centres of supports). This span would make the overhead ties or bracing very expensive.

Dispensing with the overhead bracing would necessitate the columns supporting the overhead tracks to be sufficiently rigid in themselves to maintain the tracks in perfect alignment, and, in addition to this, they would require exceptionally heavy and good foundations and anchorages.

The cranes themselves would be expensive, and, should the surface of the whole yard be covered, which would necessitate four cranes, each 100 foot span, it would mean the employment of four operators—one for each crane.

These were the principal objections to the overhead crane system, but they were deemed sufficient to cause the rejection of this plan in favor of the gantry crane system.

This plan contemplates the use of two travelling cranes, each 200 feet span, running upon tracks on the surface of the ground, parallel to the length of the yard, so that the two cranes cover the whole surface, with the exception of three spaces, one five feet wide down each outside edge of the yard, and one ten feet wide down the center. There is one line of track down each outside edge, and two lines of track down the center.

It was proposed to mount the cranes upon end frames or legs, making them what are commonly called "gantry cranes," and to make the legs or end supports of sufficient height to allow a train of cars, with men on top of same, to pass freely underneath. For this purpose the clear height from the top of the rail to the underside of the stringer that the crane trolley traverses, was fixed at 20 feet 0 inches; and as the height from the surface

The diagonal members consist of angle irons riveted to wing plates secured to the trusses and floor beams, these wing plates being bent to conform to the angles of the floor system and the trusses.

To prevent any cross strains of the struts resulting from the live load (the weight of the stringers and trolley), it is taken directly from the stringer suspenders up to the top of the posts of the main trusses by means of diagonal suspender angles. These angles also form posts for the attachment of a line of hand-railing.

Resting on top of the floor beams are two lines of channel irons parallel to the main trusses. These channel irons form stringers for the foot walk, which extends the full length of the crane. The walk is made of two thicknesses pine plank with tar-paper between. The floor beams also carry the pillow blocks for the main shafting. At the ends of the crane, and in the plane of the trusses, are carried down riveted legs or supports of the box form. These legs are firmly braced to the bottom chords of the main trusses with large plate-iron brackets, well stiffened with angle-iron flanges. The legs are also braced to each other crosswise of the crane, with a system of horizontal and diagonal braces, with a stiff tie-beam at the foot of the legs.

The width from centre to centre of the trucks supporting the crane is forty-three feet nine and three-quarter inches, forming a wheel base for the crane of a little more than one-fifth of the span, which is sufficient to square the crane on the tracks.

The end frames are formed of plates and angles, arranged so as to present a smooth end surface, the corners of the openings being filled in with curves of large radii.

The top chords are made of two channel irons with a cover plate on top, and latticing on the bottom. The bottom chords are made of two channel irons, latticed on top and bottom, so as to afford no room for lodgment of moisture; this point being carefully kept in view throughout the construction.

The vertical posts of the trusses each consist of four angle irons latticed together. The diagonal members of the trusses are each formed of two angle irons riveted at their intersection. Particular care was paid to the connections of all members.

The loads and strains adopted for this crane were as follows: A live load for trolley equal to 20,000 pounds. To this was added, for impact, 25 per cent., or 5,000 pounds. The weight of

FIG. 53.

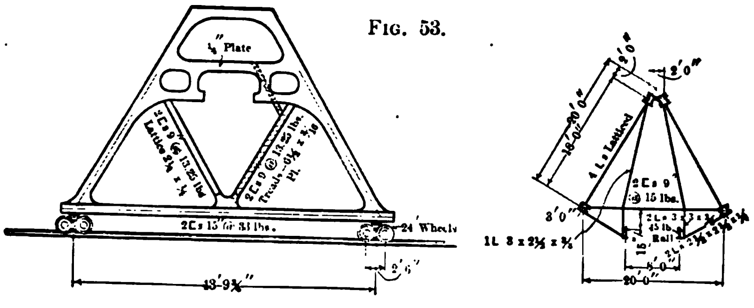

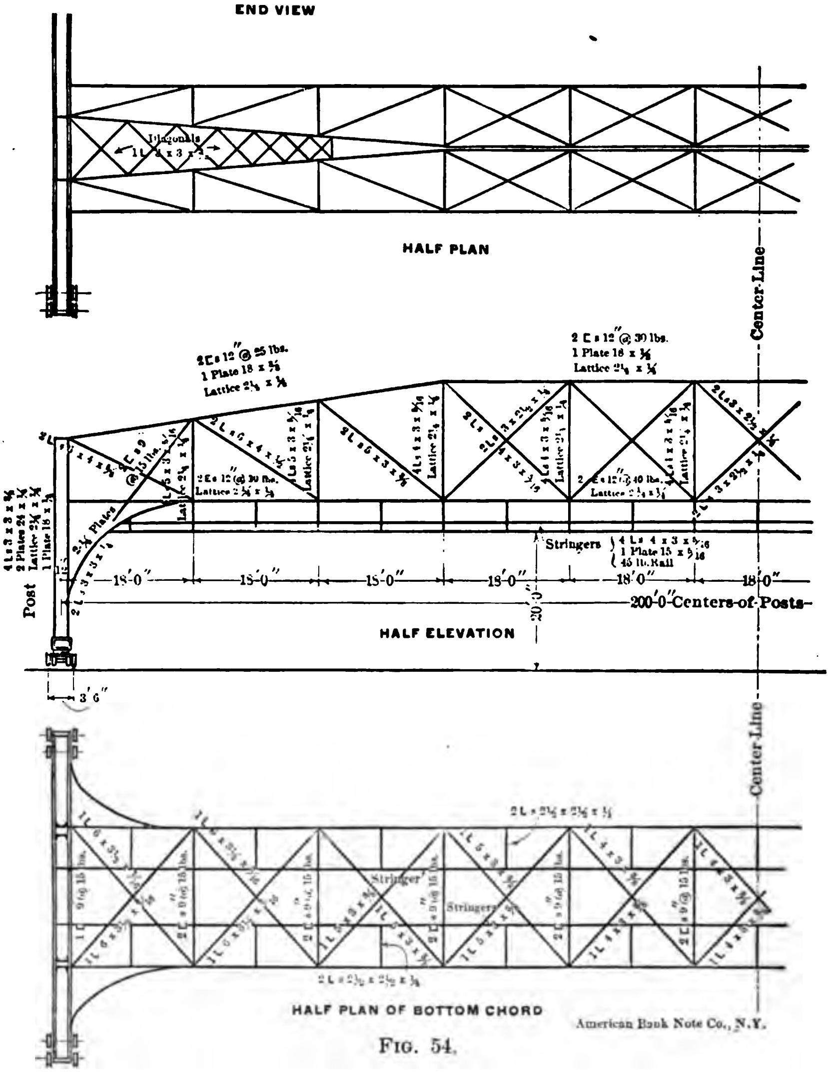

American Bank Note Co., N.Y.

FIG. 54.

The diagonal members consist of angle irons riveted to wing plates secured to the trusses and floor beams, these wing plates being bent to conform to the angles of the floor system and the trusses.

To prevent any cross strains of the struts resulting from the live load (the weight of the stringers and trolley), it is taken directly from the stringer suspenders up to the top of the posts of the main trusses by means of diagonal suspender angles. These angles also form posts for the attachment of a line of hand-railing.

Resting on top of the floor beams are two lines of channel irons parallel to the main trusses.. These channel irons form stringers for the foot walk, which extends the full length of the crane. The walk is made of two thicknesses pine plank with tar-paper between. The floor beams also carry the pillow blocks for the main shafting. At the ends of the crane, and in the plane of the trusses, are carried down riveted legs or supports of the box form. These legs are firmly braced to the bottom chords of the main trusses with large plate-iron brackets, well stiffened with angle-iron flanges. The legs are also braced to each other crosswise of the crane, with a system of horizontal and diagonal braces, with a stiff tie-beam at the foot of the legs.

The width from centre to centre of the trucks supporting the crane is forty-three feet nine and three-quarter inches, forming a wheel base for the crane of a little more than one-fifth of the span, which is sufficient to square the crane on the tracks.

The end frames are formed of plates and angles, arranged so as to present a smooth end surface, the corners of the openings being filled in with curves of large radii.

The top chords are made of two channel irons with a cover plate on top, and latticing on the bottom. The bottom chords are made of two channel irons, latticed on top and bottom, so as to afford no room for lodgment of moisture; this point being carefully kept in view throughout the construction.

The vertical posts of the trusses each consist of four angle irons latticed together. The diagonal members of the trusses are each formed of two angle irons riveted at their intersection. Particular care was paid to the connections of all members.

The loads and strains adopted for this crane were as follows: A live load for trolley equal to 20,000 pounds. To this was added, for impact, 25 per cent., or 5,000 pounds. The weight of the trolley was estimated at 23,000 pounds—making a total of 48,000 pounds distributed on four wheels, spaced about nine feet centres, bringing a reaction upon each stringer support of 18,000 pounds.

To still further provide for any sudden application of a live load, it was assumed to be equal to 22,000 pounds applied at any panel point of bottom chord of each truss.

This is largely in excess of any load that will come upon the crane; but it was considered advisable to use it, in view of the fact that the load might catch, thereby bringing a greatly increased weight upon the trolley.

The dead load, weight of trusses and floor, was assumed at 88,000 pounds per truss, or 8,000 at every point of bottom chord of each truss.

In order to provide for a very large factor of safety in the bottom lateral system, a wind pressure of twenty pounds per square foot was assumed, or a load of 5,000 pounds at each panel point of bottom chord. To resist these combined loads, the following limitations of strains were adopted:

For live loads.	Tension......	12,000	lbs. per sq. in. of net section.
	Shear........	6,000	" " " " " " "
	Compression.	10,000	" of gross section.
Bearing on rivets and bolts...		12,000	" per sq. in.
For dead load.	Tension......	15,000	" " " " of net section.
	Shearing....	10,000	" " " " " " "
	Compression.	12,000	" " " " " gross section.
Bearings on rivets and bolts..		15,000	" " " "

In all the compression members a proper reduction of the strains was made in all long members, so as to insure the same general factor of safety throughout, and the strains in the bottom lateral system were still further reduced to 10,000 pounds per square inch in tension and 8,000 pounds per square inch in compression. All of these strains are largely in excess of what the writer would recommend for an ordinary crane construction; but the ratio of dead load to live load is so great that it was necessary to observe the greatest possible economy of material to avoid the crane being so heavy that it would be impracticable.

The truss members were not all proportioned to comply exactly with the areas that the above limitations of strains called for. They were never made of less sections, and in sev-

the trolley was estimated at 23,000 pounds—making a total of 48,000 pounds distributed on four wheels, spaced about nine feet centres, bringing a reaction upon each stringer support of 18,000 pounds.

To still further provide for any sudden application of a live load, it was assumed to be equal to 22;000 pounds applied at any panel point of bottom chord of each truss.

This is largely in excess of any load that will come upon the crane; but it was considered advisable to use it, in view of the fact that the load might catch, thereby bringing a greatly increased weight upon the trolley.

The dead load, weight of trusses and floor, was assumed at 88,000 pounds per truss, or 8,000 at every point of bottom chord of each truss.

In order to provide for a very large factor of safety in the bottom lateral system, a wind pressure of twenty pounds per square foot was assumed, or a load of 5,000 pounds at each panel point of bottom chord. To resist these combined loads, the following limitations of strains were adopted:

For live loads.	Tension......	12,000	lbs. per sq. in. of net section.
	Shear........	6,000	" " " " " " "
	Compression.	10,000	" of gross section.
Bearing on rivets and bolts...		12,000	" per sq. in.
For dead load.	Tension......	15,000	" " " " of net section.
	Shearing....	10,000	" " " " " " "
	Compression.	12,000	" " " " " gross section.
Bearings on rivets and bolts..		15,000	" " " "

In all the compression members a proper reduction of the strains was made in all long members, so as to insure the same general factor of safety throughout, and the strains in the bottom lateral system were still further reduced to 10,000 pounds per square inch in tension and 8,000 pounds per square inch in compression. All of these strains are largely in excess of what the writer would recommend for an ordinary crane construction; but the ratio of dead load to live load is so great that it was necessary to observe the greatest possible economy of material to avoid the crane being so heavy that it would be impracticable.

The truss members were not all proportioned to comply exactly with the areas that the above limitations of strains called for. They were never made of less sections, and in sev-

eral cases the section was increased in order to obtain the necessary stiffness. This will account for the seemingly largely increased area of some of the members over that required by theory.

The minimum speeds of the various motions of the crane are as follows :

Traverse of main bridge	200	feet per minute.
" trolley	400	"
Hoist with full load	20	"

The crane rests upon four trucks; each having four steel-tired double-flange wheels, twenty-four inches in diameter. The wheels are keyed to steel axles, five inches in diameter. The gauge of the track is three feet six inches centres of rails. The journals are five inches in diameter, seven inches long, fitted with bronze bearings carried in cast-steel oil-boxes, with ample provision for lubrication. The wheels on one truck at each end are connected by means of a system of shafts and bevelled gear wheels. The gear wheels are steel castings, and are of extra heavy design throughout. The shafting from one truck to the other is four inches in diameter. The couplings are all rigid flanged couplings, tightly keyed to the shafts, and fitted with turned bolts of a tight driving fit. The main shaft, extending the length of the crane, is carried in universal bearing pillow blocks of very heavy design. These pillow blocks are bolted to the cross beams of the floor system, with packing pieces between them and the beams, and are lined up perfectly true and level. The thickness of the packing pieces varies to suit the requirements of each individual pillow block.

The end bearings, where the main shaft is geared to the diagonal shafts that connect it to the trucks at each end, are carried by compound boxes, so that it is impossible for the main and angular shafts to get out of line.

Special care has been taken with all the bearings to provide ample facilities not only for the lubrication, but for the inspection and removal of any part. For most of the bearings compression grease-cups have been supplied, in addition to the usual lubricating-holes and reservoirs.

The top of each truck carries a steel socket or cup, and in this socket is placed a hard steel ball, six inches in diameter.

The bottom of the end supports are also provided with

eral cases the section was increased in order to obtain the necessary stiffness. This will account for the seemingly largely increased area of some of the members over that required by theory.

The minimum speeds of the various motions of the crane are as follows:

Traverse of main bridge	200 feet per minute.
" trolley	400 "
Hoist with full load	20 "

The crane rests upon four trucks; each having four steel-tired double-flange wheels, twenty-four inches in diameter. The wheels are keyed to steel axles, five inches in diameter. The gauge of the track is three feet six inches centres of rails. The journals are five inches in diameter, seven inches long, fitted with bronze bearings carried in cast-steel oil-boxes, with ample provision for lubrication. The wheels on one truck at each end are connected by means of a system of shafts and bevelled gear wheels. The gear wheels are steel castings, and are of extra heavy design throughout. The shafting from one truck to the other is four inches in diameter. The couplings are all rigid flanged couplings, tightly keyed to the shafts, and fitted with turned bolts of a tight driving fit. The main shaft, extending the length of the crane, is carried in universal bearing pillow blocks of very heavy design. These pillow blocks are bolted to the cross beams of the floor system, with packing pieces between them and the beams, and are lined up perfectly true and level. The thickness of the packing pieces varies to suit the requirements of each individual pillow block.

The end bearings, where the main shaft is geared to the diagonal shafts that connect it to the trucks at each end, are carried by compound boxes, so that it is impossible for the main and angular shafts to get out of line.

Special care has been taken with all the bearings to provide ample facilities not only for the lubrication, but for the inspection and removal of any part. For most of the bearings compression grease-cups have been supplied, in addition to the usual lubricating-holes and reservoirs.

The top of each truck carries a steel socket or cup, and in this socket is placed a hard steel ball, six inches in diameter.

The bottom of the end supports are also provided with corresponding cupped sockets. The ball rests in a slightly elongated groove; the major diameter of the groove being crosswise to the centre line of the truck, and the minor diameter being parallel to the track on which the truck rests. By means of this elongation of the groove, the ball is allowed a slight motion at right angles to the centre line of the track on which the truck travels, and this permits of the expansion and contraction of the main girders of the crane. It also allows the trucks upon which the crane travels to be slightly out of align-

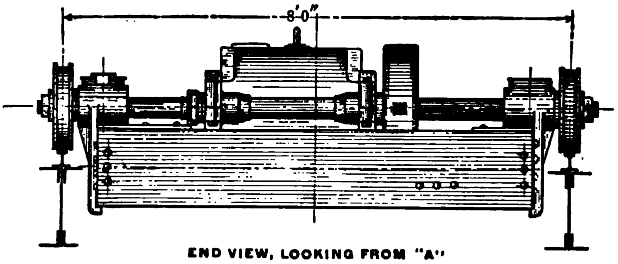

END VIEW, LOOKING FROM "A"

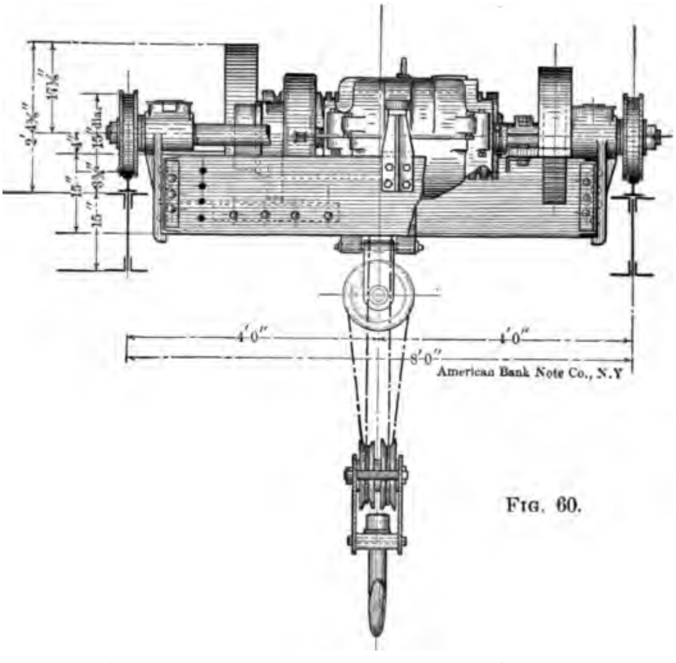

American Bank Note Co., N.Y

FIG. 60.

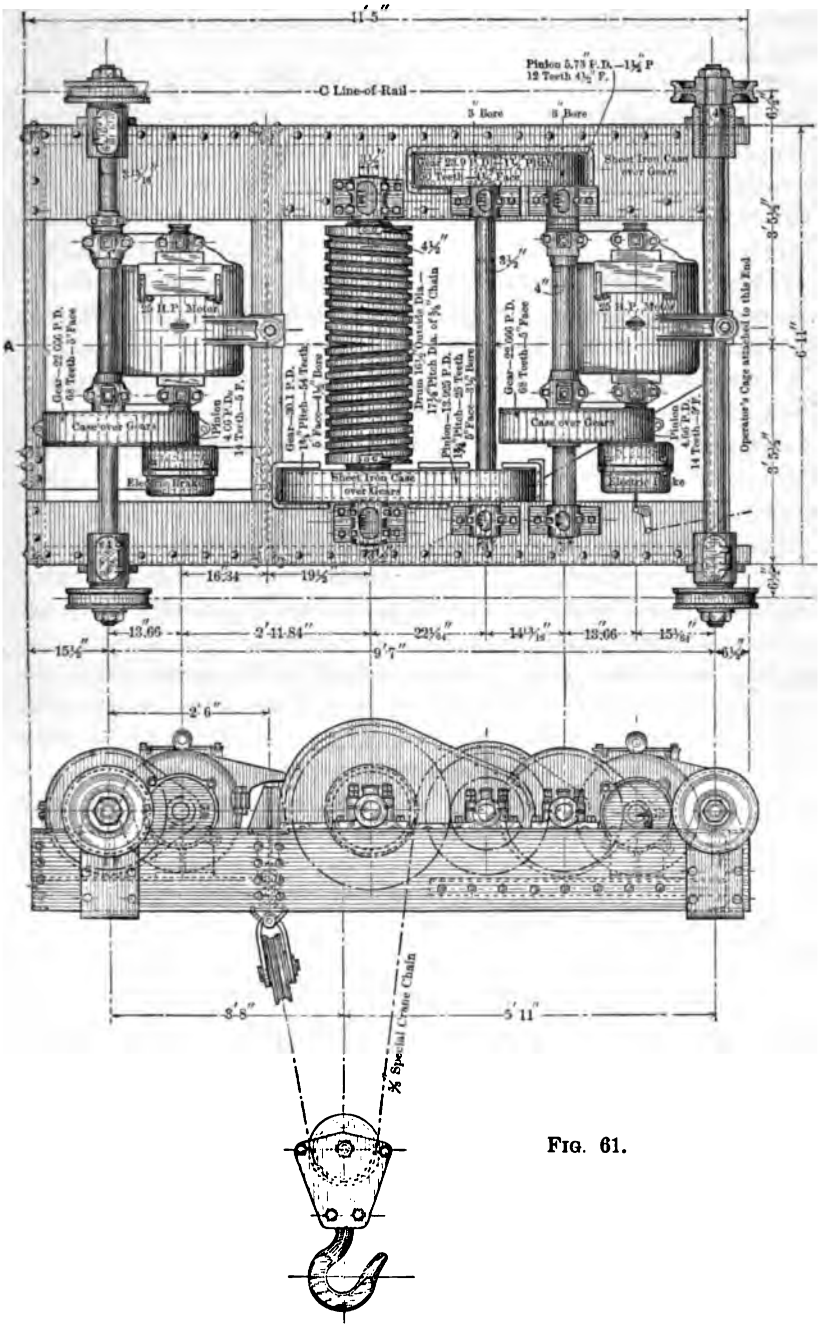
11′ 5″
Pinion 5.73″ P.D.—1¼″ P
12 Teeth 4½″ F.
C Line-of-Rail
3″ Bore
3″ Bore
Gear 23.9″ P.D.—1½″ Pitch
50 Teeth—4½″ Face
Sheet Iron Case over Gears
6½″
3′ 5½″
6′ 11″
3′ 5½″
6½″
4½″
3½″
4″
25 H.P. Motor
25 H.P. Motor
A
Gear—22.056 P.D. 68 Teeth—5″ Face
Pinion 4.05″ P.D. 14 Teeth—5″ F.
Case over Gears
Electric Brake
Gear—30.1 P.D. 1¾″ Pitch—54 Teeth 5″ Face—1½″ Bore
Drum 16½″ Outside Dia.—17⅛″ Pitch Dia. of ⅝″ Chain
Pinion—13.925 P.D. 1¾″ Pitch—25 Teeth 5″ Face—3½″ Bore
Sheet Iron Case over Gears
Gear—22.066 P.D. 68 Teeth—5″ Face
Case over Gears
Pinion 4.56″ P.D. 14 Teeth—5″ F.
Electric Brake
Operator's Cage attached to this End
16.34″
19½″
13.66″
2′ 11.84″
22¹⁄₆₄″
14¹³⁄₁₆″
13.66″
15¹⁄₆₄″
15½″
9′ 7″
6½″
2′ 6″
3′ 8″
5′ 11″
⅝″ Special Crane Chain

FIG. 61.

ment, as the balls form universal joints between the trucks and the crane.

The arrangement of the gearing connecting the driving shafts to the trucks is such that the vibrations of the trucks around the centres of the balls do not disturb the alignment of the gearing to an appreciable amount, as the centres of the main driving spur wheels are on the same lines as the centres of the balls.

Directly in the centre of the crane is placed a fifty horse-power electric motor, connected directly to the main shaft with one reduction of steel gearing.

The trolley which travels upon the suspended runway beneath the main chord is of the ordinary crane type, with the exception that the gearing throughout is of extra heavy design, and of either steel or bronze castings.

The winding-drum is of cast iron, with right and left hand grooves for the chain, milled out of solid metal.

The traversing of the trolley upon the track and the hoisting is done by two twenty-five horse-power electric motors. All the motors are wound for 220 volts.

The operator's cage is attached to, and moves with, the trolley. It is provided with windows on all sides, so that the operator can have a clear view of any part of the yard. In the cage are placed the controllers which govern all the motions of the crane, and the necessary switches, cut-outs, etc. Over all the gearing is placed coverings or housings that are readily removable, the coverings being arranged to exclude all moisture or dust. The motors are also encased.

Attached to each truck are two snow-ploughs, or guards, made of plate stiffened with angle irons. These snow-ploughs are easily removable, so that access can be had to any part of the trucks.

The end frames are so arranged that should it be desired to transfer a load from one side of the yard to the other, both cranes can be brought in line with each other by means of removable stops on the trucks, and the trolley from either crane run directly through the end supports and on to the track on the other crane.

DISCUSSION.

Mr. William L. Clements.—There are novel features in this crane design, and a prominent one is its exceedingly long span. Mr. Seaver has designed a crane which is unique, and it is a type the like of which is not to be found in this country or abroad, as far as I am informed.

I desire to call your attention to the large amount of motor power required compared to the small amount actually required for the work to be done. One hundred horse powers in motors are used, and the crane's capacity is ten tons. Mechanically its efficiency is small, which is generally the case with gantry cranes, and in this case particularly so, with its very long span and great weight.

Without considering other types of cranes which might, with some modifications, perform the same service, but which designs have been doubtless considered by Mr. Seaver, it would appear to me that the ordinary travelling crane would combine advantages over the Gantry. In such a case shorter spans only would be desirable, and whilst the area occupied by the longitudinal supports would be somewhat greater, the dead weight to be moved for each operation would be very much smaller, and the required horse-power for the crane very much smaller.

There is another type of crane not considered by Mr. Seaver to which I desire to call attention. This is the locomotive gantry type.

I am not acquainted with the arrangement of the yard and tracks of the Cambria Iron Company beyond the hints given in the drawings shown with this article. The article mentions tracks for loading and unloading material.

The locomotive gantry crane is an ordinary locomotive crane mounted upon a gantry of a span and height sufficient to allow a car to pass under it. The track gauge upon which the gantry travels is therefore about fourteen feet. Upon this track gauge a crane may be mounted, and with a weight to the machine of about fifty tons, it is capable of lifting ten tons at a radius of fifty feet, so that one of these cranes covers an area one hundred feet wide, and two of these cranes would fulfil the same service that one gantry does. Such a crane would not weigh as much nor occupy more ground area, considering the fact that the area occupied by the loading or unloading tracks is here occupied by the crane.

With such a crane, there is less dead weight to be moved for each operation, and with two machines not costing more than one gantry there is an advantage that more work may be done without additional expense of attendants.

The use of the locomotive crane here is a suggestion and a matter of information for those who are not familiar with this type of crane, which is used so largely abroad, and now being introduced for such service in this country.

Mr. Seaver.—In reference to one of the objections which have been raised against the crane, which was the large amount of dead weight to be moved in relation to the live load, I would state that the idea is to bring this crane opposite to the pile of material that is to be loaded on the car and bring the cars opposite to that. Then the only part of the weight of the crane which is moved is simply the trolley, which is of the ordinary crane construction, and that trolley would travel from the pile of stock to the car. So that the objection of moving a large crane for every load does not exist. That is not the way that it was intended to work this crane.

Mr. Schumann.—I merely want to call attention to the ingenious arrangement of the cross section of the trusses, as a whole, Mr. Seaver has adopted. I have never before seen an arrangement of the main chords forming apices of a triangle. By this means Mr. Seaver gets rid of all cross bracing between the upper chords and also permits the tension members which carry the car to be hung directly to the upper chord instead of cross girders ordinarily required. The design is most commendable.

Mr. Oberlin Smith.—It seems to me that under the circumstances this must have been the best form of crane, and better than an ordinary travelling crane, because the yard was so very long—eight hundred feet, I believe—and the side tracks to support a travelling crane would be expensive as well as perhaps being in the way. Another advantage of this form is that it enables an unlimited extension of yard length, provided such should become necessary, at very slight expense, merely putting down ordinary railroad tracks. Furthermore this crane is another illustration of the extreme usefulness of independent electric motors to drive such apparatus. As Mr. Seaver said, the large motor which is necessary to move a crane two hundred feet long is only used occasionally—merely when it is desirable to shift its general position. The ordinary working of the crane being only to run a light trolley crosswise, of course but little power is used for the practical work. Here again if we had to supply a large engine to drive the crane in the old-fashioned way, steam would have to be up all the time and the power would be partially wasted. But with electricity there is no power wasted except at the instant of using it. I can see that its great weight is an objection to the crane, and the first cost of a large motor. Of course, the practical conditions present in each particular case would determine whether it would be better to put the expense in the uprights of the crane to support it from the ground or whether it would be better to put raised tracks at the ends of it so as to use the ordinary type.

Mr. J. L. Gobeille.—With regard to the question of the extra power, the President is reported to have said that if you got too much metal in a machine and that it was paid for, you would not hear of it, but if too little material was used you might hear of it even if it were paid for. It seems to me Mr. Seaver has got too much power and too much strength for what his crane is supposed to do; and yet, while this is intended for only ten tons, the boss of the gang might put on fifteen tons.

Mr. G. C. Henning.—I think I can say something about the necessity of making these cranes strong; especially at the Cambria Iron Works, where laborers are mainly Hungarians. When a pile is to be loaded on a car, they put their chains and hooks around and away it goes, and if the crane is not strong enough, there will be the end of something.

It is not mentioned in the paper, but I would like to say that the Cambria Iron Company is going to use this crane for material heavier than that which is now rolled; but it is altogether likely that as soon as people know that they have a crane which can handle pieces eighty feet long they will simply say, we will want a piece eighty feet long, and some means of handling such must be available. Furthermore, the Cambria Iron Company is going into rolling larger sections. In that case the bars will become heavier, but at a rate which cannot be foretold. But the other point of the economy of space in the yard, such as is absolutely necessary at Johnstown in the yards of the structural mills there, is of the first importance. Even the mere interposition of a post across that two hundred feet would make it absolutely impossible for the people to handle certain pieces of material which are called for. So they must be prepared at any time to handle any kind or any weight or any size of piece that can pass through their mills. A smaller crane would not at all handle pieces such as are of almost daily occurrence, say plates that are 40 feet long, angles that are 60 feet long, 6 inches by 6 inches by ¾ inch thick. If there is a single post in the way there is no way of handling them, unless thirty or forty men are available, over all the material stored in the yard. A great difficulty in our structural mills is that there is rarely yard room enough to do all the work necessary. The Cambria Company is known to have a stock of material on hand which far exceeds that of any other mill in the country, and is therefore obliged to have handling facilities in the stock yard greater in capacity and dimensions than any other of our mills, and any one familiar with the location, as some of us are, will see that a small crane would be almost out of the question, besides requiring a great number of laborers in addition to do less than what this one crane will do. That is also a consideration, and the loss of room and the multiplication of tracks in the yard is almost prohibitory. They could not handle their business if they had to put eight tracks in there instead of these two or four. The idea of transferring the loads from one crane through to the trolley on another crane so as to shift right across those yards to the car track is sometimes the only salvation of the business. If they cannot handle the material the mills have to stop, because of lack of room in their particular location.

I want to call attention to another crane of similar dimensions in the yards of the Johnson Company, at Johnstown also. But there they must have a crane covering 160 feet span by 800 feet length because they lay out all their switches and turnouts and cross-overs for electric and cable roads on a brick floor—an absolutely level yard 160 feet by 800 feet long, and every piece of rail has to be handled and put together and taken apart again and put on the cars. They could not have got the space if they had used any other kind of crane. The latter crane is not of the heavy construction described in the paper, because it is not used for very heavy loads. Only two tracks, at either end, are used to load the material. The first consideration was to get floor room of sufficient dimensions to lay out these immense curves—for instance, the Battery curve on the Broadway cable road—which would have to be laid out full size on the floor. This crane of apparently excessive capacity will no doubt be of the greatest advantage to the Cambria Company, and the low efficiency pointed out by one of the speakers is not the true efficiency of the crane at all, because the full power is used for two minutes; it is not again required for hours, while the efficiency must be considered in regard to the work done while using the trolley to handle the individual loads to be carried. While the crane is probably shifted little by little, the cars are constantly being shifted. I think the yard is on a slight grade, and when a car is loaded the brakes are loosened and it runs down one car length, the next coming into position. The crane brings all the material to the cars without interfering with anything else in the yard, and when thousands of tons of material are on hand the economy of space and the rapidity of handling and transferring material are of the utmost importance. It is not a question of what is the efficiency under full power. It is a question whether you have got power enough to do the thing at the time and at the place at which you want to do it, and the rest of the time work efficiently.

Mr. Seaver.—I would like to say one word in favor of this crane, because I feel a sort of interest in it, and that is that one of the strong arguments in favor of this crane was the cost of the crane. If we had covered that yard with elevated tracks of sufficient strength to carry four one-hundred-foot cranes, the cost of the track and the four cranes would have been very nearly three times the cost of two of those cranes, and that was considered to be a very strong argument in favor of the crane even if it does weigh in excess, as the gentleman says.

DCCX.*

THE "PROMISE AND POTENCY" OF HIGH-PRESSURE STEAM.

ILLUSTRATED BY THE TRIPLE AND QUADRUPLE EXPANSION EXPERIMENTAL ENGINES OF SIBLEY COLLEGE, CORNELL UNIVERSITY.

BY R. H. THURSTON, ITHACA, N. Y.
(Member of the Society and Past-President.)

Introductory.—For more than a hundred years—the full period, in fact, of the existence of the modern type of steam engine which received substantially its complete form from James Watt, and including the advances effected by his successors among inventors—the main lines of improvement have all been in one or another of three principal directions: increasing steam pressures, increasing ratios of expansion, and increasing speeds of piston.† Knowingly or unknowingly, however, the real and fundamental sources of gain utilized have been but two: the extension of limits of heat-conversion by extending the range of temperature through which adiabatic expansion may occur, and decreasing those losses which distinguish the real from the ideal or purely thermodynamic machine. The only known method of securing the transformation of larger proportions of the available heat energy of the steam into mechanical energy is by more complete expansion behind the piston of the engine; and the only way in which the real engine can be made more perfect in its approximation to the ideal is by reducing the proportion of heat escaping, as heat, by conduction and radiation and the friction-loss by which a part of the transformed energy is always more or less retransformed into heat. More extended adiabatic expansion can only be attained by raising steam pressures; friction can only be reduced by improved design and more thorough lubrication.

---

* Presented at the New York meeting (December, 1896) of the American Society of Mechanical Engineers, and forming part of Volume XVIII. of the *Transactions.*

† *History of the Growth of the Steam Engine*, Thurston. N. Y., 1897.

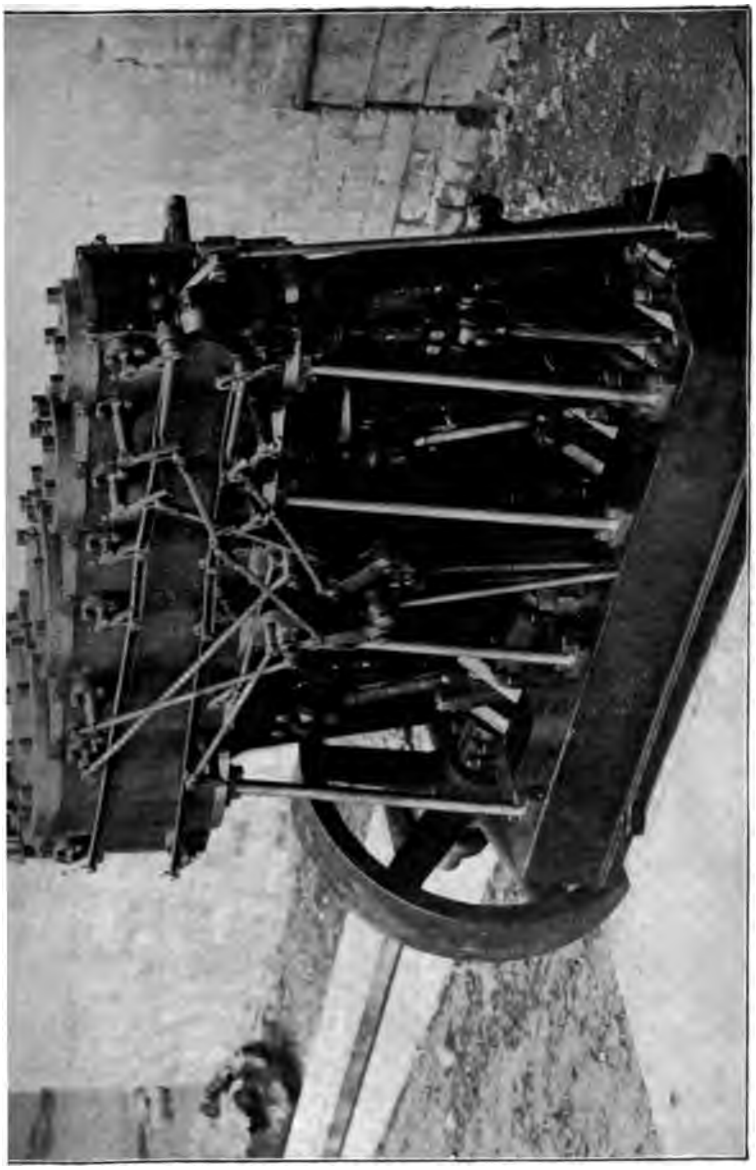

Fig. 62.—Experimental Quadruple-expansion Four-cylinder Engine of Cornell University.

The study to be here attempted is that of the "promise and potency," as Tyndall might have said, of high-pressure steam in the saturated state. The facts will be in part deduced from the operation of two high-pressure engines, the one a triple and the other a quadruple expansion engine, employed as "experimental engines" in Sibley College work.

Maximum expansion, as nearly adiabatic as practicable, is the secret of maximum efficiency, other things equal, in all cases, and increasing pressure has little or no value from this point of view without simultaneous elevation of the ratio of expansion to its practicable limit; a limit which is, however, in turn restricted by back pressure, by internal wastes, and by financial considerations.* This latter statement has been sufficiently verified already, and need not be here discussed.†

The proposition that the maximum efficiency of the fluid, thermodynamically, is measured by the value of the maximum ratio of expansion may be proven with sufficient definiteness for present purposes thus: ‡

Assuming, for convenience and as sufficiently exact for our purpose, that the expansion is sensibly hyperbolic and the operation purely thermodynamic, the work performed by the fluid at a pressure p_1, and volume v_1, expansion taking place to back pressure $p_2 = p_3$, is

$$\begin{aligned} U &= p_1 v_1 (1 + \log_e r) - p_2 v_2 ; \\ &= p_1 v_1 \log_e r ; \end{aligned}$$

where r is the ratio of expansion giving a terminal pressure $p_2 = p_3$. The value of the ratio of this work, U, to the quantity, W, of fluid employed, measured sensibly by $p_1 v_1$, is thus

$$\frac{U}{W} \propto p_1 v_1 \log_e r \,/\, p_1 v_1 \propto \log_e r ;$$

it being, however, noted that the back pressure $p_3 = p_2$ in this case. With p_3 constant, the practical case, some gain is obtainable by increasing pressures, but, loss occurring by incomplete expansion, this is not the full and maximum possible gain.

---

* *Manual of the Steam Engine*, Thurston, vol. i., chap. ii. N. Y., Wileys, 1896.

† Ibidem ; also *Transactions* A. S. M. E., 1881 to date.

‡ "Ratio of Expansion for Maximum Efficiency," *Transactions* A. S. M. E., 1881.

Experience shows that in the steam engine, as most efficiently employed, simultaneous increase of expansion with increasing pressure is always observed. The terminal pressure on the expansion line has gradually fallen, in the best engines, from higher figures to about ten pounds in the square inch, absolute, in good engines, and to eight, or even to six, pounds above vacuum in the most economical of modern condensing engines.

As pressures have risen throughout the century, the value of the best ratio of expansion has correspondingly increased, and in still higher ratio, and the best work is now done, in the best of contemporary engines as a rule, at a ratio measured by the quotient $p_1 / 8$, or a slightly higher value. The Milwaukee pumping engine, for example, gives $p_1 / 6.5 = 20$, nearly.

From what has preceded, it is seen that the efficiency, the quantity of work which may be obtained from the unit-weight of steam, may be at least approximately taken as proportional to the logarithm of the ratio of expansion for maximum efficiency, and that consequently the cost of power will be proportional to the quantity

$$W_1 = m / \log p_1,$$

where W_1 is the weight of steam per I.H.P. per hour, and p pounds per square inch.

The value of this constant, m, employing common logarithms, was fifteen years ago about 40, and is now probably not above 30 for good constructions; it has become, in the case of the best class of engines above referred to, about 25, including all wastes.

Accepting the last measures as limiting figures for the higher pressures of steam which the engineer is coming now rapidly to contemplate and experimentally to investigate, we have approximately the following:

Pressures...............	100	200	300	500	1000
Expansions..............	15	30	45	75	150
Steam used per I.H.P....	13-15	11-13	10-11	9-10	8-9

The Progress of Modern Times in the utilization of high pressures has been exhibited in an earlier paper, and is shown in the diagram here produced, for the century (Fig. 63), and with the line dotted beyond our own date to indicate the possibilities of the immediate future, assuming the same law of advance to hold.* Until the introduction of the compound engine, at

---

* *Trans.* A. S. M. E.; vol. xv., 1893, LXXII., p. 354.

about the middle of the century, the advance in pressures and in the available extent of expansion was slow; but from 1850 the progress is seen to have been not only comparatively rapid, but quite as remarkably and continuously accelerated in its rate

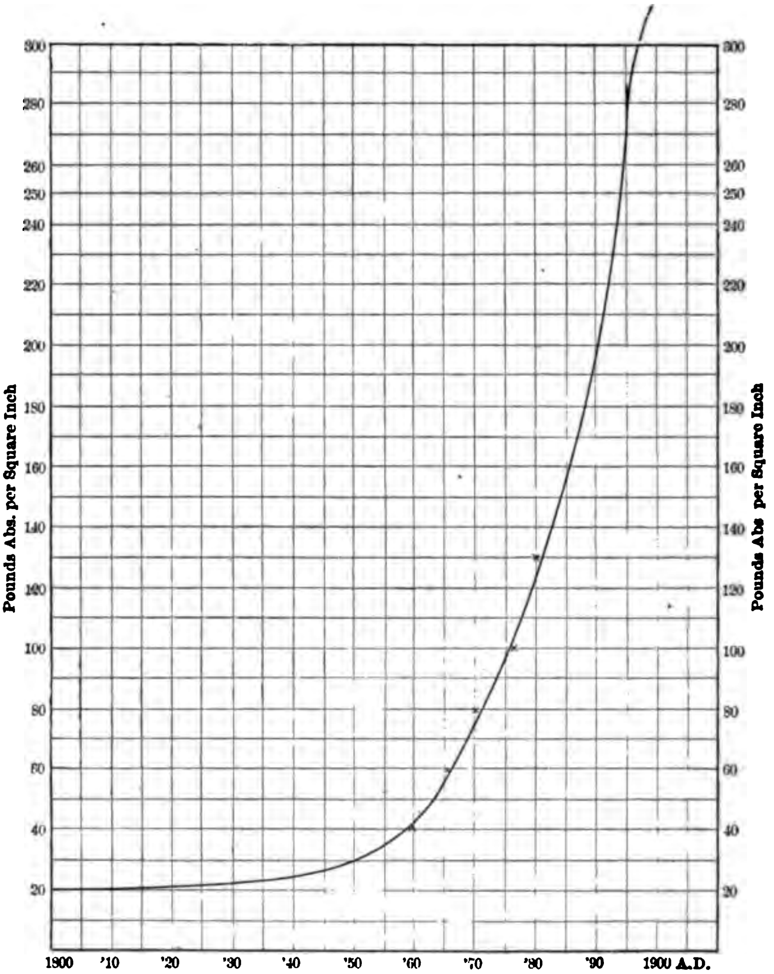

FIG. 63.—RISE IN STEAM PRESSURES, 1800-1900

of gain. At the present time the indications seem to be that, for some cause not fully determinable, but very probably mainly connected with the difficulties in securing satisfactory boiler construction, this rate of acceleration is beginning to fall off, and the hypothetical line is here taken as indicative of a possible check in this advance. The maxima rise from 50 pounds a generation ago to 125 pounds in 1880, to 200 pounds in 1890, to 250 in 1895, and are likely to be above 300 pounds in 1900. The pressures adopted in the case here to be particularly considered—500 pounds, about 34 atmospheres—are such as, in the regular course of such progress as has been witnessed in the last generation, would be reached about the year 1910 or 1920. The change now taking place so rapidly, in the transfer of the work of steam making from the "shell boiler" to the modern forms of water-tube boiler, seems likely soon to result in the removal of many obstacles to further increase of steam pressures, and it is very possible, it is probably safe to infer, that in the near future it will be found as easy to control and utilize pressures of 500 and of 1,000 pounds per square inch as to-day to employ those of 100 to 150. In fact, the employment of pressures of 1,000, 1,500, and, as is said, 2,000 pounds by Jacob Perkins sixty years ago, and of pressures of 800 and of 1,000 pounds by Dr. Alban a half-century ago, may be taken as ample evidence of the practicability of employing such tensions of steam in the future, if found desirable.* The two real questions are, with us, simply, Will it pay the boiler-maker to supply boilers for these pressures? and Will it pay the engineer or steam-user to adopt them in ordinary practice? These are questions of finance, to be settled by direct experiment and by prolonged experience, should experiment indicate a possibility of commercial gain by the movement. There is certainly at the present time no insuperable difficulty, as a matter of engineering simply, in designing to meet a demand for pressures as high as those which, in 1835 to 1845, were handled successfully, even with the crude facilities of those times, by Perkins and Alban; nor is there any difficulty to-day in proportioning an engine to work steam of any pressure that may be found financially desirable. A triple-expansion engine, with ratios of expansion in each cylinder of about 3½, will work steam of 500 pounds, and at 4 to 4½ expansions will take care of steam at one thousand pounds. A quadruple-expansion engine will similarly handle these pressures with ratios of 2 and 2½. It seems improbable that a quintuple-expansion engine will be required.

---

* *History of the Growth of the Steam Engine*, pp. 323-327. Vide, also, Stewart and Galloway's histories, and Pole's translation of Alban.

Measures of Efficiency.—What is meant by the measures now coming to be employed in the statement of efficiencies, in the more common units, may be in some degree exhibited by a comparison of those measures. In the accompanying figures (Figs. 64, 65), the variation of quantity of heat and of steam per I. H. P. per hour, with varying efficiency, are exhibited; the primary assumption being that, in a condensing engine, the circulating fluid received 1,100 B. T. U., or 855,800 foot-pounds of energy, per pound vaporized; corresponding, for efficiency unity, to about 2.3 pounds of feed-water or of steam per power unit. For unity efficiency, the exact figure for $J = 778$ is 2,545 B. T. U., and the values representing a maximum in the best contemporary practice are not far from 20 per cent. efficiency, 12,725 B. T. U. per hour per I. H. P., and 11.6 pounds of feed-water or of steam. One half this efficiency and double these expenditures are considered excellent figures for the average engines of good builders, with steam at now common pressures, between 100 and 125 pounds.

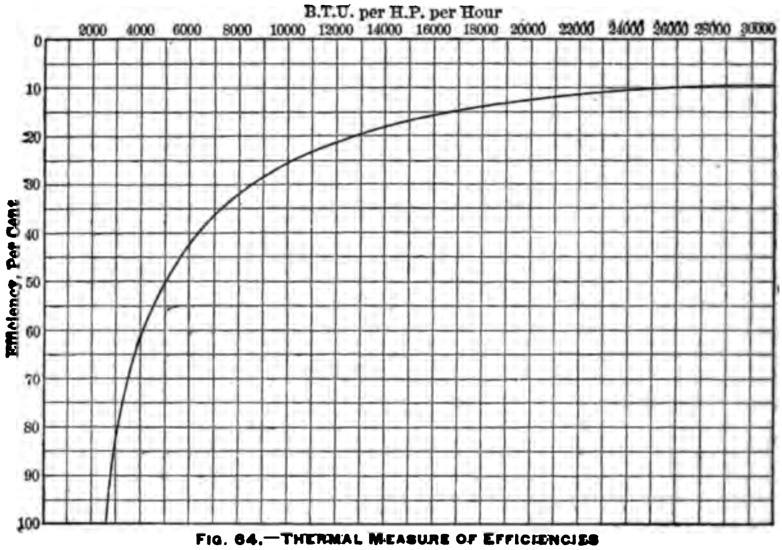

FIG. 64.—THERMAL MEASURE OF EFFICIENCIES

On both scales the limits of the corresponding ideal case may be taken as not far from 25 per cent. efficiency, and rarely as attaining 30 per cent. The latter figure corresponds closely to 8,200 B. T. U. and 7.5 pounds of steam per I. H. P. per hour. Practice has attained to, at best, about 70 per cent. of the ideal, thermodynamic case.

The purpose of employing any stated measure of engine efficiency is always definite, and should be stated in advance, while the unit of comparison should be as precisely defined. There are employed in the work of the engineer one absolute and several relative efficiencies.

The Absolute Efficiency measures the proportion of the total energy supplied, in form of heat, which is transformed into the dynamic form, in the cycle or the series of operations considered.

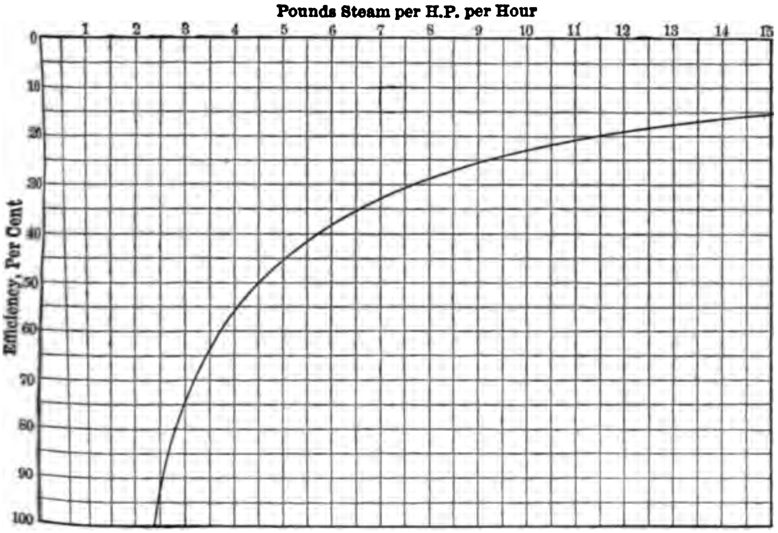

FIG. 66.—STEAM-WEIGHTS AND EFFICIENCIES
American Bank Note Co., N.Y.

A Relative Efficiency measures the ratio of dynamic energy secured for the performance of work, in any given cycle or operation, to the quantity which would have been similarly transformed and delivered had the cycle or operation been of equal perfection with one chosen as a standard. This standard is selected for special purposes, and may be more or less perfected, or even, in an exactly defined degree, defective, as compared with the pure, the ideal, thermodynamic case most nearly parallel therewith, as may be found desirable or expedient; but its exact nature and its absolute efficiency should always be known and precisely stated.

The Standard of the Measure of Absolute Efficiency is perfect transformation of the one form of energy into the other; its measure is unity. It corresponds to the transformation of one British or metric thermal unit into 778 foot-pounds, or into 426.9 kilogrammeters, of dynamie energy.

The Standard of Relative Efficiency is that efficiency obtainable in a cycle of specified form, ideal, thermodynamically, and also especially adapted to the case in hand as representing that particular ideal which the actual cycle and operation compared therewith may approach, but, in consequence of mechanical or physical limitations, can never absolutely attain.

The Carnot Cycle is one primary standard or measure of relative efficiencies: being that most perfect of thermodynamic cycles which both mechanical and physical conditions forever forbid the engineer reaching; though the perfection of his heat-engines may be exactly measured by comparison with this purely thermodynamic and perfect cycle.

The Rankine Cycles here adopted are forms of steam-engine cycle which are conceivable and thermodynamically possible, but which, until heat-wastes by conduction and radiation are extinquishable, represent also a limit approachable but unattainable by the engineer. They are defective Carnot cycles, failing to provide Carnot's compression-line, and in some cases his complete expansion to back pressure. They are given their special forms in order that the engine, as built and operated, may be compared with the purely thermodynamic machine of similar construction, and they therefore have similar temperature and pressure and expansion limits.

The latter measure of efficiency is called, in some cases, the "standard efficiency," * and is defined to be the ratio of the absolute efficiency of the actual engine to the absolute efficiency of the ideal with which it is, at the time, compared as the standard.

The Clausius Cycle, employed also as a standard, is the Carnot cycle without compression, but with complete expansion. It is impracticable, but permits the measure of the loss incurred in the Rankine cycle by incomplete expansion.

The Use of Standards may be required in any investigation of

---

* Sankey on "The Thermal Efficiency of Steam Engines," *Proc.* Inst. C. E., March, 1896; Thurston on ditto, *Jour. Frank. Inst.*, December, 1896.

efficiencies of engines. Which shall be employed as relative will be determined by the nature of the defect sought to be exhibited. The use of the Carnot cycle permits a measure of the total wastes, aside from the purely thermodynamic loss of rejected heat during isothermal compression; the use of the Rankine adiabatic cycle enables the losses due to conductivity of the steam cylinder, and to incompleteness of the cycle as well, to be summed; the use of the Rankine "jacketed-engine cycle" similarly permits the comparison of the real engine with that other form of ideal—the steam distribution being, as in the preceding case, the same as that of the real engine; and the Clausius cycle allows the comparison of the real engine, and of its absolute efficiency, with that of the ideal of the same peculiar and special form.

The defects of the ideals thus selected for use as relative standards may be either thermodynamic, physical, or mechanical, or even defects of the assumed construction producing defective steam distribution; but every such ideal is, in some degree, and sometimes in various ways, defective.

Thus the absolute efficiency gives a measure of the proportion of thermal converted into dynamical energy, both as an absolute measure and as affording an opportunity of comparison of such efficiencies among any number of engines to determine their merits as thermodynamic machines and their comparative values. Its highest values now range between fifteen and twenty per cent., and among the less economical classes of engine down to ten per cent. and less. The relative efficiencies measure the defects of the actual cycle employed or assumed, and permit a comparison of the theoretical and also the practical results of thermodynamic conversion in real construction with either of the ideals taken for standards, and thus measure the extent of the deficiency of the real and the ideal, or the relative merits of the various ideals studied as standards toward which to approximate in real engines.

The Heat-Supply occurs in a manner quite different, in the case of the Carnot cycle, from that characterizing the other standards of heat and steam distribution. The communication of heat to the fluid takes place by transformation of dynamic into thermal energy, in its midst, in the process of final adiabatic compression. As is sometimes said, the cycle is characterized by possessing a "dynamic heater." In the case of the Rankine, the Clausius, and other cycles proposed as standards of reference under various circumstances, the feed-water takes up heat at gradually increasing temperatures from thermal heaters, and from the heated mass of water in the boiler into which it is introduced by the feed-pump. In the Carnot cycle the feed-water begins receiving heat from the source of supply at the temperature of vaporization, and only latent heat is demanded; in the other cycles the feed-water is delivered to the boiler at lower points on the scale, and receives heat through a wide range of temperature, in the form of sensible heat, in addition to the supply of latent heat.

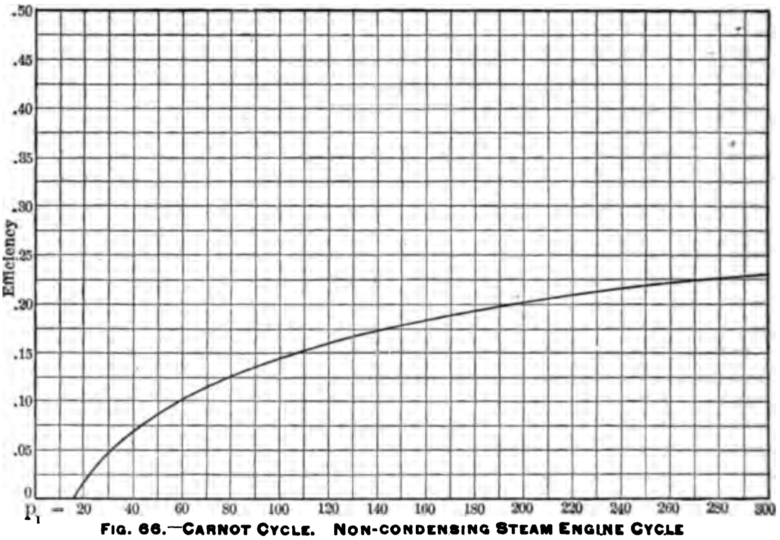

FIG. 66.—CARNOT CYCLE. NON-CONDENSING STEAM ENGINE CYCLE
$Pa = 15$

The Clausius standard cycle, adopted by some authorities as a reference standard, expands adiabatically to the back pressure. Captain Sankey has proposed to make the form of cycle that of Rankine, but adopting a constant value of the terminal pressure; expansion terminating at a pressure exceeding the back pressure by the constant quantity, 0.15 atmosphere.

The Ideal Limit of Performance, adopting the Carnot as the cycle of maximum efficiency as our standard of comparison, is exhibited, for the full range of pressures to-day employed or proposed to be employed by most advanced practitioners, in Figs. 66 and 67. Back pressure is assumed, in the first of these cases—that taken for comparison with the common non-condensing engine cycle—at 15 pounds per square inch, and in the case of the cycle to be compared with the best condensing engines at 2 pounds. In the former case gain is seen to be rapid with increasing pressures up to about the now familiar range of high-pressure machines, thence becoming less and less rapid, and even at 300 pounds pressure reaching only 23 per cent., with final gain at the rate of about 2½ per cent. per 100 pounds rise in pressure. A similar method of variation of efficiency with increasing steam pressures is seen in Fig. 67, in which the range of pressure and temperature is made coincident with that of the best condensing engines. Gains are slow above the now usual maximum of steam pressure in practice, and at 300 pounds increasing at the rate of about 2½ per cent. per 100 pounds rise, as before. But here the efficiencies have much higher numerical values than in Fig. 66, necessarily, and 25 per cent. at about 100 pounds, 30 per cent. at about 200, and 33 at 300 pounds pressure, are the maxima for even the ideal case and the Carnot cycle. For 500 and 1,000 pounds the figures rise to something above 35 per cent., and to about 50 per cent., as seen in more detail later.

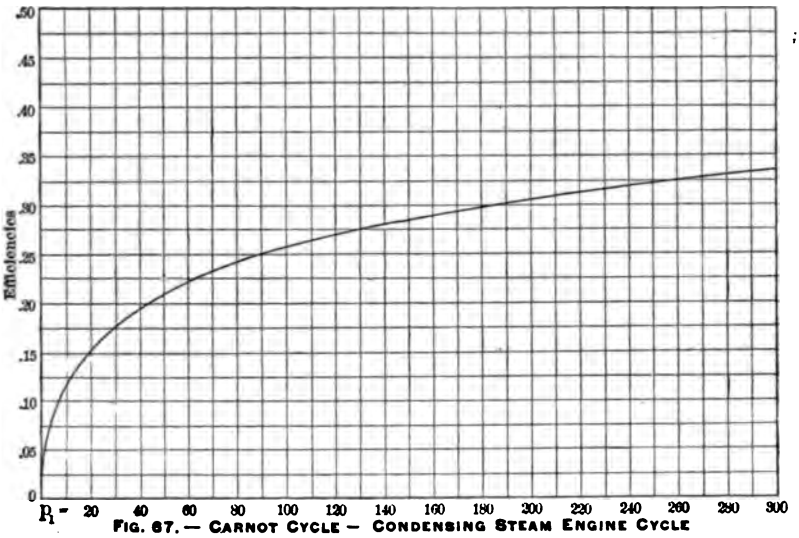

FIG. 67.—CARNOT CYCLE—CONDENSING STEAM ENGINE CYCLE
$P_2 = 2$

These diagrams are peculiarly interesting and instructive maximum economy for each pressure, and the extension of its range of practical availability with minimum cost of power as pressures rise. At 40 pounds the best work is done at between 20 and 25 I. H. P., and economy falls off rapidly outside these limits. At 60 pounds the best work is done at between 30 and 40 H. P., and about twice as wide a range is permissible, with the previously assumed allowable variation in economy. At 80 pounds the work is most satisfactory at 45 H. P., and a range of 20 H. P. gives but little variation in the cost of power. At 100 pounds the best power is 50 H. P., and the range of nearly constant economy is still wider; while at 125 pounds the limit of pressure observed, the engine does its best work at about 55 or 60 H. P., and good work up to 70 H. P.

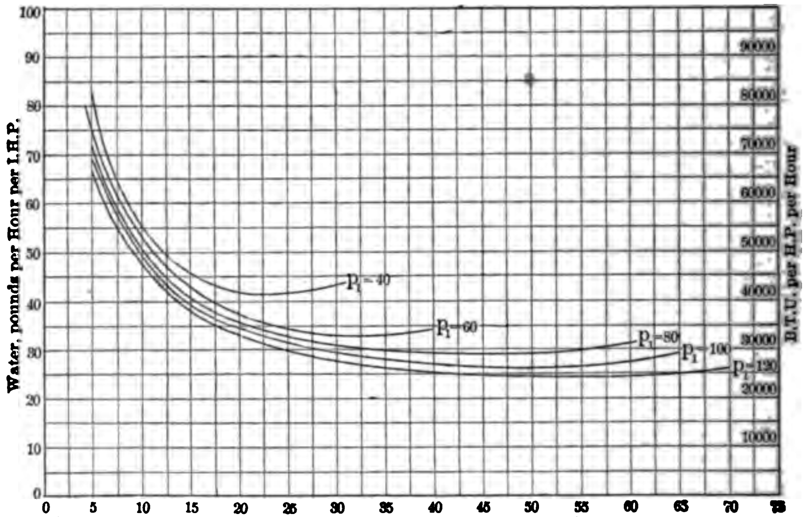

FIG. 69.— STATIONARY CONDENSING ENGINE EFFICIENCY,
Simple Engine Rated H.P., 50.

The same story is told, in a different and perhaps more familiar way, by Fig. 71, in which the ordinates are ratios of expansion, and the abscissæ are costs of power in weights of steam and of feed-water, as before. Pressures ranging from 40 to 120 pounds, the same minima in costs of power are exhibited, and the best work is seen to be effected at ratios of expansion rising in magnitude from 2½ to 4. The range of cut-off giving best work is seen to be more restricted, and variation from that value more costly at the lower than at the higher pressures. In-reverse its curvature and tend to become asymptotic to the upper limit of abscissas. This is simply an illustration of the invariable rule in engineering, as in many other directions, that the closer we approximate to our ideal the more difficult does it become either to effect a nearer approach or to maintain the degree of perfection actually reached. This diagram is both the measure of the earlier progress and an indicator of the trend of our own progress for the immediate future.

Practical Results, as modified by steam pressure and as determined by experiment upon engines of but ordinarily good construction and performance, are illustrated in Fig. 69, in which the curves of efficiency for an engine rated at 50 horse-power with 100 pounds pressure are given. This is one of the elements of the largest of the experimental engines of Sibley College. Collating the results of numerous tests of the machine, a simple engine of nine inches diameter of cylinder and of moderate piston speed, working as a condensing engine, we obtain data which give smooth curves of the character here presented, after careful rectification of curvature and of relation of location.

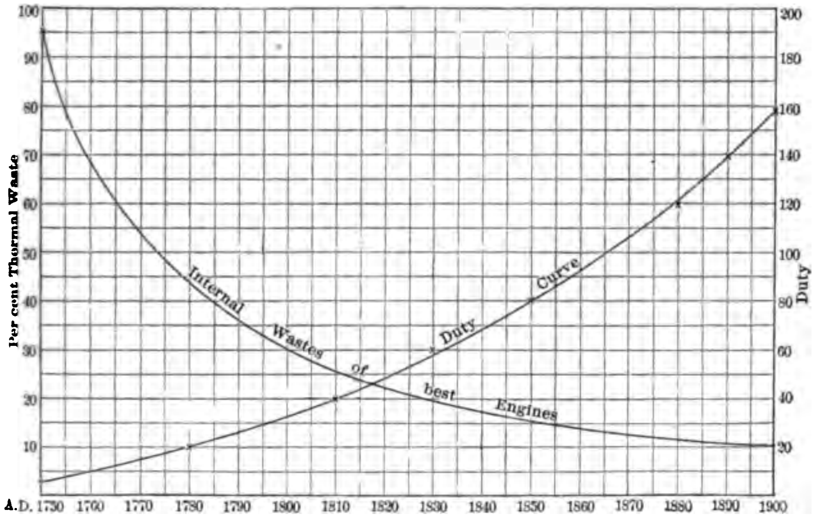

FIG. 68. — PROGRESS IN STEAM ENGINE EFFICIENCY

American Bank Note Co., N.Y.

The points to be noted are the gradual decrease of the gain attainable by increasing pressures, the location of the power for maximum economy for each pressure, and the extension of its range of practical availability with minimum cost of power as pressures rise. At 40 pounds the best work is done at between 20 and 25 I. H. P., and economy falls off rapidly outside these limits. At 60 pounds the best work is done at between 30 and 40 H. P., and about twice as wide a range is permissible, with the previously assumed allowable variation in economy. At 80 pounds the work is most satisfactory at 45 H. P., and a range of 20 H. P. gives but little variation in the cost of power. At 100 pounds the best power is 50 H. P., and the range of nearly constant economy is still wider; while at 125 pounds the limit of pressure observed, the engine does its best work at about 55 or 60 H. P., and good work up to 70 H. P.

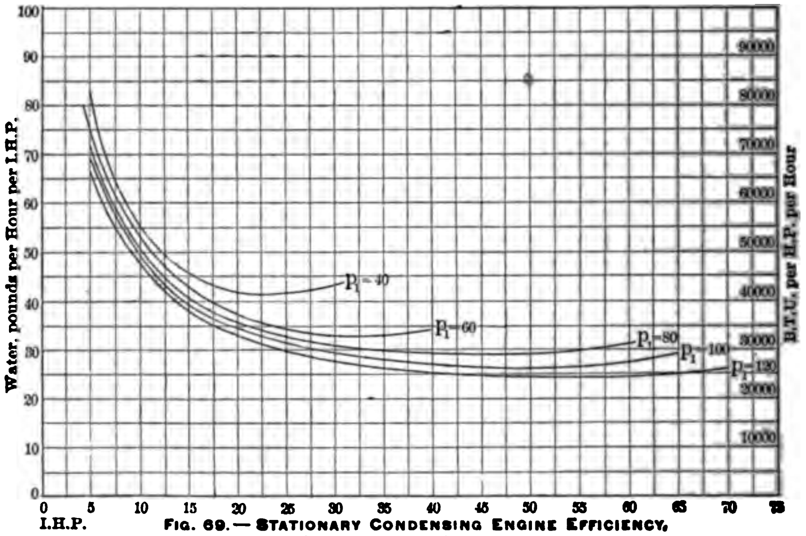

FIG. 69.—STATIONARY CONDENSING ENGINE EFFICIENCY, Simple Engine Rated H.P., 50.

The same story is told, in a different and perhaps more familiar way, by Fig. 71, in which the ordinates are ratios of expansion, and the abscissæ are costs of power in weights of steam and of feed-water, as before. Pressures ranging from 40 to 120 pounds, the same minima in costs of power are exhibited, and the best work is seen to be effected at ratios of expansion rising in magnitude from 2½ to 4. The range of cut-off giving best work is seen to be more restricted, and variation from that value more costly at the lower than at the higher pressures. In-we shall have a collection of data of value bearing upon this hitherto little-studied source of waste in the more economical classes of engine. Meantime the accompanying curves, Fig. 72, may be taken as illustrative of the bearing of this defect upon engine performance in the case of the familiar forms of condensing mill engine. The diagrams are the smooth curves derived by examination of a variety of work of this class, up to the present time. Still better data will probably be found later, when the last work of this kind, of the year 1895–96, can be published. The main facts sought to be presented at the moment are the somewhat rapid increase of this form of waste with increasing clearances in the "low-speed" mill engine, and the obvious deduction that much of the gain noted in recent years in the better classes of mill engine is unquestionably due to the skill exhibited by their designers in making the "dead spaces" of minimum volume. It is especially interesting, in studying these curves (Fig. 72), to note the influence of decreasing clearance in not only effecting economy and raising the value of the efficiency, but also in raising the value of the ratio of expansion for best performance, and thus permitting more complete utilization of approximately adiabatic expansion and resultant heat conversion and utilization.

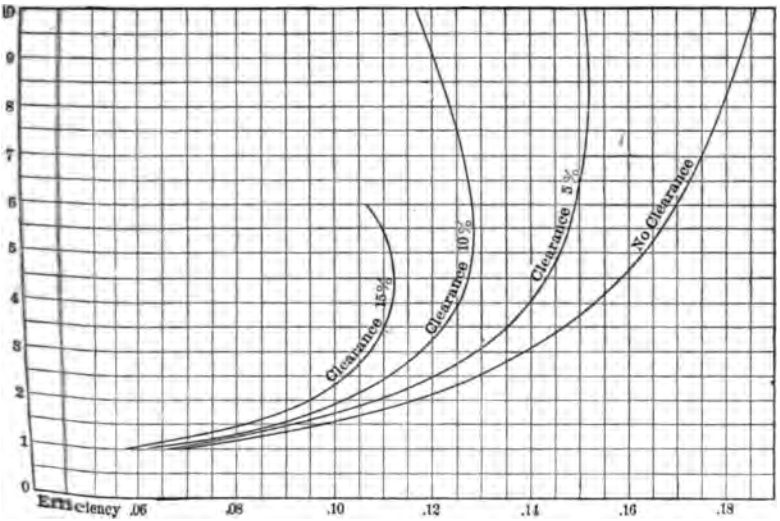

FIG. 72. — EFFICIENCY AND CLEARANCE
$p_1 = 100$; $p_3 = 4$; Clearance 0. 5. 10.15. per cent

creasing the pressure three times here gives about fifty per cent. higher cost of power at the lower than at the higher pressure. These two diagrams illustrate the behavior of the average well-designed and well-constructed simple engine of our day, when of small size and having large clearance, within the range of pressures which have been noted in mill-engine operation during the last half-century; the standard condensing engine of the various dates being taken as the basis of our selection. This may be taken as illustrative, in fact, of the past and present simple Corliss-engine practice as pressures have gradually

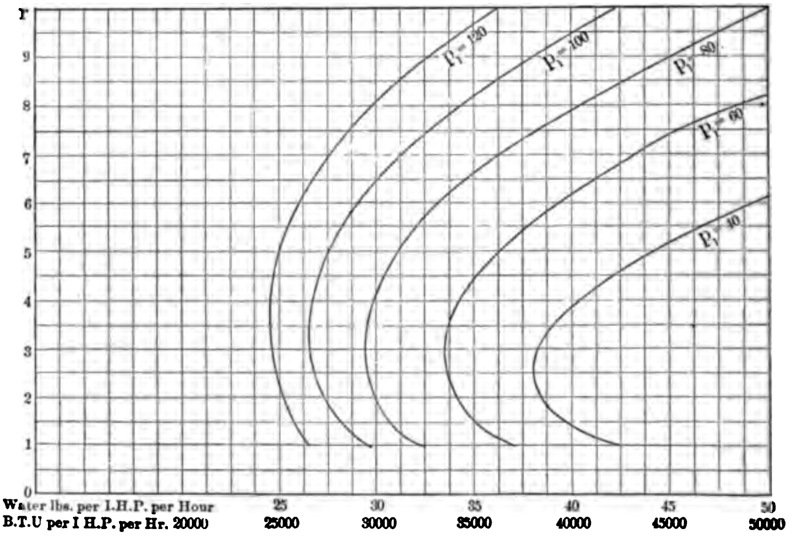

FIG. 71. — ECONOMY WITH VARYING RATIO OF EXPANSION.
American Bank Note Co., N.Y.

risen in our New England mills from the lower to the upper limit of our range. These data, derived from a small engine, may be taken as representative of either an unusually excellent machine of that size or of a fairly good engine of the average size found in our mills. Large and exceptionally good engines will give better figures; engines taken as they happen to come into the experience of the engineer will fall below these figures, and often very considerably.

Clearance Losses are sometimes important, especially in the better class of engines. Experiment upon engines of the kind above referred to have been in progress some years in the laboratories of Sibley College, and it is anticipated that in time economy also restrict the range through which power may be varied without serious ill-effect, on either side the point of maximum efficiency. Clearance is thus seen to be at once an important element of waste and of restriction of the application of the principles of maximum economy, and its elimination one of the essential elements of further progress.

Fig. 74 illustrates the same general variation of efficiency with varying clearance for the case of a fairly economical non-condensing engine, as deduced from the experimental work of the Sibley College laboratories, and presents the measures of steam consumption on a diagram in which the curve is, as in the preceding cases, carefully rectified by reference to both the rational and the experimentally determined qualities.

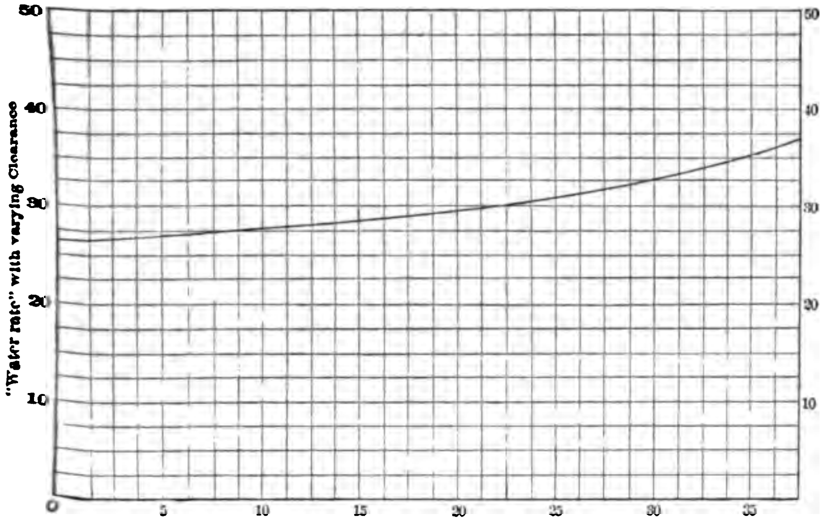

FIG. 74.—CLEARANCE AND EFFICIENCY, CORLISS ENGINE

$p_1 = 100$; $p_3 = 18$; Clearance variable

9" x 36" @ 90 Revolutions.

Here the clearance varies from about 35 per cent., in the engine employed, down to one-third that figure, and the curve is sufficiently well established to permit tracing it back to zero clearance. The figures for steam consumption actually varied, as shown, from 35 pounds down to 28, and, tracing back to zero clearance, to 26 pounds; but on a large scale, as 500 H. P. and upwards, these figures should be reduced to one-half their present magnitude.

Fig. 73 exhibits precisely the same facts, but in a more usually familiar form, and gives the weights of feed-water corresponding to the efficiencies previously computed and observed, with, as before, the deduced results, for the same condensing engine, could the clearance wastes of the particular case be entirely annihilated. Both diagrams are for what may be taken as a fairly good representative steam pressure, 100 pounds. It is seen that, were the engine to be subject to all other wastes, precisely as at present, it would be practicable, clearance being abolished, to bring up the efficiency to about 20 per cent. The figures of the second set of curves give about 12 pounds of feed-water per power-unit, as the practical limit for the engine with zero clearance; while the maximum efficiency would be reached with a higher ratio of expansion than 10. With 5 per cent. clearance, the expansion ratio is restricted to about 9 for best effect, and the cost of power becomes larger than the minimum by one-third. Ten per cent. clearance reduces the available ratio to 5.5, and the steam consumption becomes 50 per cent. higher than the minimum. Fifteen per cent. clearance brings down the effective expansion to a cut-off at one-fourth, and the steam supplied becomes nearly doubled—21 pounds per I. H. P. per hour. Here also, as in so many other cases, the conditions restricting

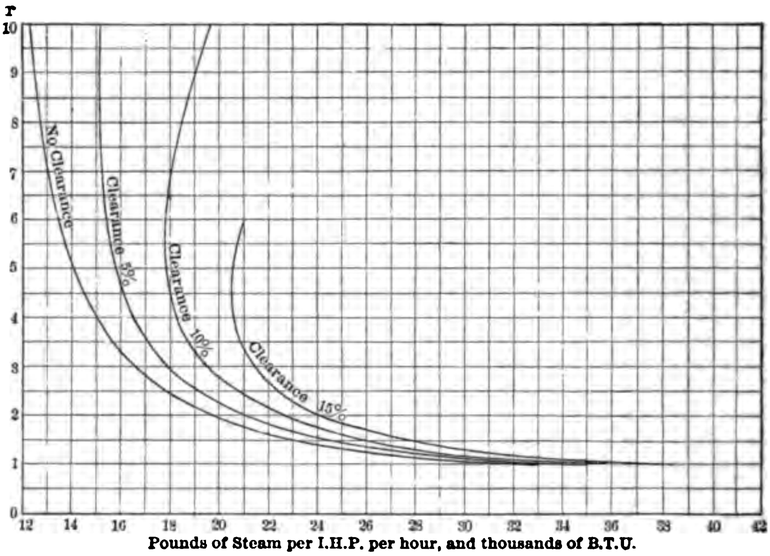

FIG. 73.— EFFICIENCY AND CLEARANCE

$p_1 = 100$; $p_3 = 4$; Clearance 0, 5, 10, 15 per cent economy also restrict the range through which power may be varied without serious ill-effect, on either side the point of maximum efficiency. Clearance is thus seen to be at once an important element of waste and of restriction of the application of the principles of maximum economy, and its elimination one of the essential elements of further progress.

Fig. 74 illustrates the same general variation of efficiency with varying clearance for the case of a fairly economical non-condensing engine, as deduced from the experimental work of the Sibley College laboratories, and presents the measures of steam consumption on a diagram in which the curve is, as in the preceding cases, carefully rectified by reference to both the rational and the experimentally determined qualities.

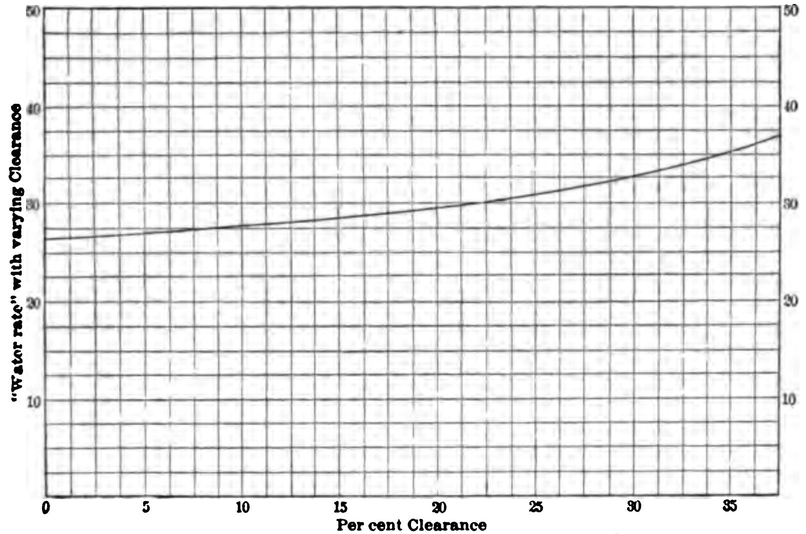

FIG. 74.— CLEARANCE AND EFFICIENCY, CORLISS ENGINE
$p_1 = 100$; $p_3 = 18$; Clearance variable
9" x 36" @ 90 Revolutions.

Here the clearance varies from about 35 per cent., in the engine employed, down to one-third that figure, and the curve is sufficiently well established to permit tracing it back to zero clearance. The figures for steam consumption actually varied, as shown, from 35 pounds down to 28, and, tracing back to zero clearance, to 26 pounds ; but on a large scale, as 500 H. P. and upwards, these figures should be reduced to one-half their present magnitude.

The deduction from this examination of the subject is, as it would seem, that the loss by clearance, in the Corliss engine—practically the Rankine cycle—is proportional to the extent of the dead spaces, or the clearances, as they are commonly called, at moderate values of that quantity, and increase in higher ratio at excessive values of the clearance.

The Distribution of Energy, usefully and wastefully, in the Rankine ideal, the cycle of the representative engine, is seen in the next set of curves (Fig. 75), in which are shown, after a manner already repeatedly employed in earlier studies of the general

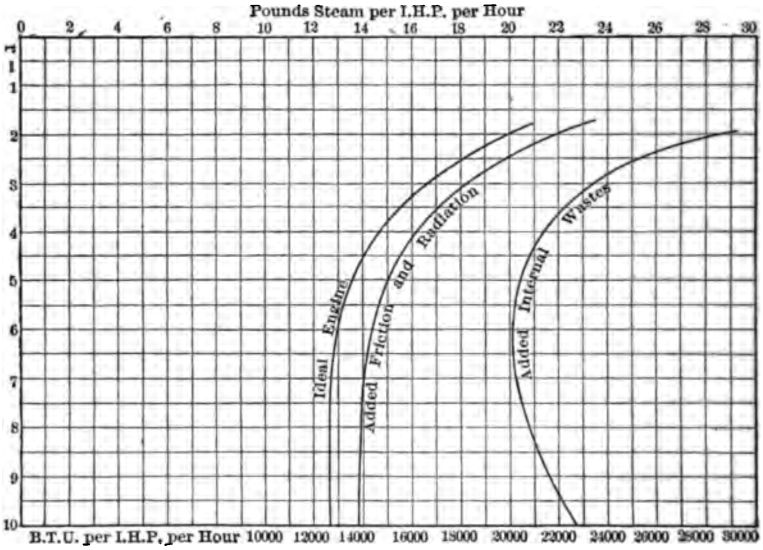

FIG. 75.—CONDENSING ENGINE

$p_1 = 100; \; p_3 = 5$

subject, the variation of weight of steam and of heat expended in the ideal and the real case, at ratios of expansion ranging from unity to ten, and with boiler pressure at 100 pounds, back pressure five pounds, and rated engine-power at 200. The machine from the performance of which these data are obtained is one of the experimental engines of Sibley College, working under conditions generally favorable to good performance, though with a much higher back pressure than is desirable, the supply of condensing water being unfortunately limited. The figures are fair average figures for an engine of usual proportions and economic value. The ideal thermodynamic case, taken as a Rankine jacketed cycle, would give the lower of the several curves and a minimum cost of power measured by 12.5 pounds of steam or of feed-water per I. H. P. per hour. Added friction and external thermal losses raise the figures above those of the ideal case one and a half to two pounds; internal wastes bring them up to nearly double the ideal figure as a minimum, adding about six pounds to the figures for the ratios of expansion and the cut-offs adjacent to those indicative of good adjustment and of minimum costs.

The best ratio of expansion is found, finally, at about six, with little variation between five and seven. With a back pressure of two instead of five pounds these values of the best adjustment of that ratio would have been somewhat enlarged, and the economy of the engine considerably increased as well.

Taking this "simple" engine as representative of the common condensing mill engine of moderate size, with its internal wastes computed and observed, giving very nearly the same constant for the expression obtained for that loss as did the Sandy Hook engine which first supplied the required data for the construction of these expressions, we have the following as figures representing the magnitude and method of variation of the efficiency of the engine with varying ratios of expansion. In the expression for internal wastes, $w = a\sqrt{rt}$, a is taken as 22.5. This is large, since the engine is small, the losses being greater as the diameter of cylinder is smaller, in some as yet not precisely ascertained ratio.*

CONSTANT QUANTITIES.

Boiler pressure, by gauge, pounds per square inch	100
Revolutions per minute	86
Quality of steam at engine, per cent	98
Back pressure, pounds per square inch	5
Friction of engine, horse-power	7.25

The following table gives the results of computation beside those of observation:

---

* *Manual of the Steam Engine*, Thurston, vol. i., chaps. 4, 5.

and with 1,100 B. T. U. supplied per pound of feed-water the consumption of energy would be, as a minimum, 23,650 B. T. U. per I. H. P. per hour. The difference between this figure and the cost, in the same measure, of the best work done on shore, about one-half that amount, is a measure, at least in some degree, of the hampering influence of the exigencies of naval construction.* Could clearances be made insignificant, jacketing effective, and proportions of engine such as would give a good vacuum and little friction, the wastes, if not costs, would be halved.

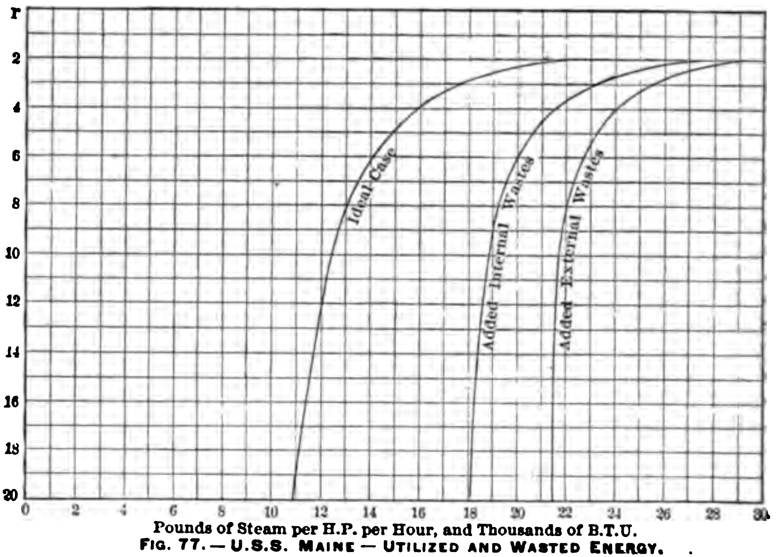

FIG. 77.—U.S.S. MAINE—UTILIZED AND WASTED ENERGY.
Engines 35½″–57″–88″ x 36″—I.H.P. 9000.
$p_1 = 165$ $p_3 = 4$

The Conditions of Success, with steam at now usual high pressures, is illustrated by the next illustration, Fig. 78, exhibiting the "efficiency curves" of the Sibley College triple-expansion

---

* In marine practice it is not unusual to demand and to obtain over a half horse-power from each square foot of boiler heating surface, and twenty to twenty-five horse-power from each square foot of grate area, the evaporation being about eight pounds per square foot of heating surface, the engine demanding sixteen pounds of feed-water or less per horse-power per hour, and fuel being burned at the rate of thirty or forty pounds on the unit area of grate.

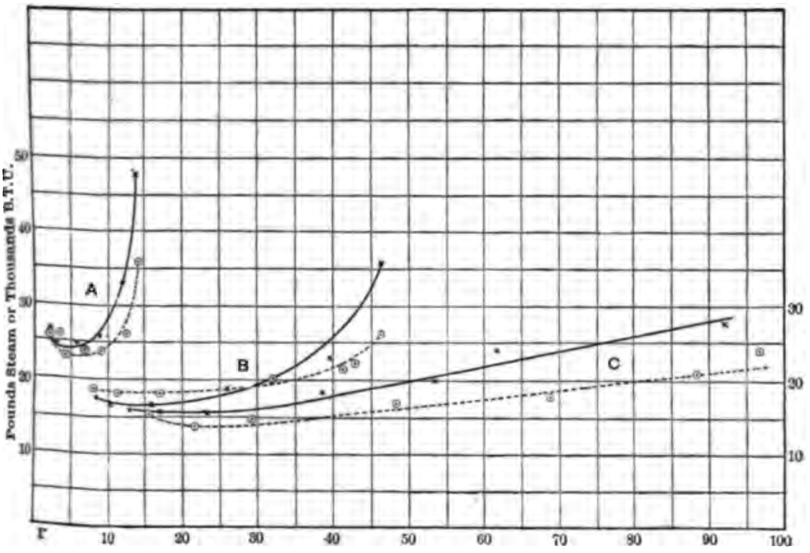

FIG. 78.—EFFICIENCIES OF TRIPLE-EXPANSION ENGINE

experimental engine when doing about its best work, the data being, for best effect, substantially as follows:

SIBLEY COLLEGE EXPERIMENTAL ENGINE.

Cylinders	9 + 16 + 24 × 36 inches	Clearances	7.6, 8.93, and 9.85 per cent.
Piston rods	2.31 inches diameter	Boiler pressure	125(abs.); 110 by gauge
Vacuum	10.8 pounds, 22 inches	Barometer	29.4 inches
Jacket-water	13.72 per cent.	Condensing water, per lb. steam	19 lbs.
Total I. H. P.	140.2	D. H. P.	123.4
Mechanical efficiency	0.88	Steam, per I. H. P. per hour	13.3 lbs.
B. T. U., per I. H. P. per hour	14,160	Steam, per D. H. P. per hour	15.1 lbs.
B. T. U., per I. H. P. per minute	236	Total ratio of expansion	13.83

Pressures (absolute), at cut-off, 131, 43, 13.5; at release, 43, 14.5, 2.5.
Jacket-water, per cent., 26.4, 7.05, 28.1 in cylinders, and 9.85, 34.6 in receivers.
Work per cent., 1, 1.33, and 1.675 in cylinders 1, 2, and 3.
Thermodynamic efficiency of Carnot cycle, 24.7 per cent.; actual, 18 per cent.
Ratio of actual to Carnot, 0.73.
Water-rate of Rankine cycle, 9.6 pounds; ratio to actual, 0.72.

In the figure, the curves *A* are those obtained from the engine when the high-pressure cylinder is worked alone as a simple engine, jacketed and unjacketed; *B* is the set of curves obtained from high-pressure and intermediate, working as a compound, and *C* is the set representing the machine, as a whole, jacketed and unjacketed, working as a triple-expansion engine, but with and with 1,100 B. T. U. supplied per pound of feed-water the consumption of energy would be, as a minimum, 23,650 B. T. U. per I. H. P. per hour. The difference between this figure and the cost, in the same measure, of the best work done on shore, about one-half that amount, is a measure, at least in some degree, of the hampering influence of the exigencies of naval construction.* Could clearances be made insignificant, jacketing effective, and proportions of engine such as would give a good vacuum and little friction, the wastes, if not costs, would be halved.

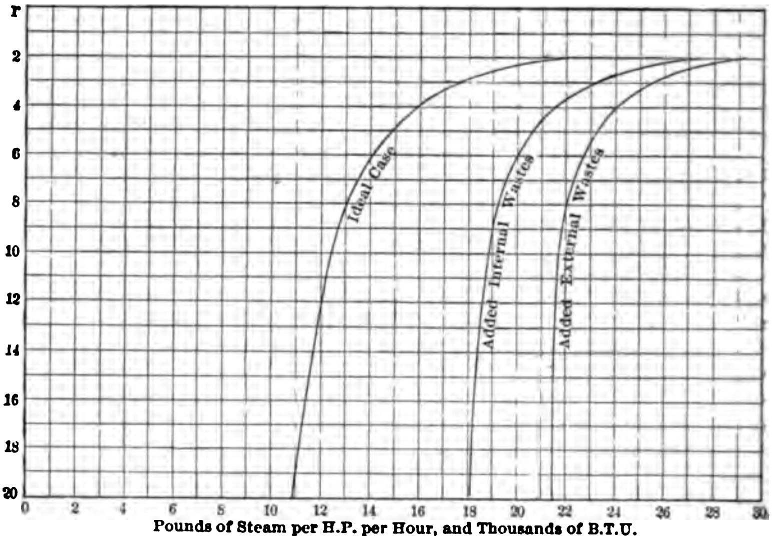

FIG. 77.—U.S.S. MAINE—UTILIZED AND WASTED ENERGY.
Engines 35½"–57"–88"x 36"—I.H.P. 9000.
$P_1 = 165$ $P_3 = 4$

The Conditions of Success, with steam at now usual high pressures, is illustrated by the next illustration, Fig. 78, exhibiting the "efficiency curves" of the Sibley College triple-expansion

---

* In marine practice it is not unusual to demand and to obtain over a half horse-power from each square foot of boiler heating surface, and twenty to twenty-five horse-power from each square foot of grate area, the evaporation being about eight pounds per square foot of heating surface, the engine demanding sixteen pounds of feed-water or less per horse-power per hour, and fuel being burned at the rate of thirty or forty pounds on the unit area of grate.

jacketed, respectively; the minimum cost in steam being 23 pounds steam, about 23,000 B. T. U. per horse-power per hour. The double-cylinder engine brings these figures up to 12 and 17 for the ratio of expansion, and down to 16 and 18 pounds of steam, and exhibits the anomaly, in this instance the idiosyncrasy, of doing its best work with cylinders and receiver unjacketed at the lower and the reverse at the higher ratios of expansion. The triple-expansion engine performs its highest duty, unjacketed, at 20 expansions, jacketed at 22, and at an expenditure of, respectively, a trifle above 15 and 13.5 pounds.

The combined diagrams are shown in Fig. 79, together with the quality curves of the steam in the three cylinders, as measurable on the diagrams from the point of cut-off to the end of the stroke of each. The saturation curves on the larger diagram are necessarily discontinuous because of the variation of the percentages of clearance. In the high and intermediate cylinders, the cylinder condensation continues beyond the point of cut-off; in the low-pressure cylinder, superheating is observed at the point of cut-off, with progressing loss of superheat down to the end of the stroke, at which point saturation is reached. This last is the condition, already frequently noted, and especially by Dwelshauvers-Dery, as that of best performance for any given engine. The assumption is corroborated in this case by the fact that this engine has shown its highest efficiency under these conditions. Superheating is here effected, to precisely the right degree, by the action of the second receiver-jacket. The jackets take about 13.7 per cent. of all steam sent to the engine; and of this the first cylinder jacket takes one-fourth, the intermediate one-twelfth, the low pressure one-third, and the balance is taken by the receiver jackets in the proportion of three in the second to one in the first.*

Substantially, all experiments upon the Sibley College experimental engine show that, in the case of that engine, at least, the use of the steam jacket on all cylinders is more advantageous than its disuse. The highest water rate, unjacketed, in the most extended series of tests, 27.5 pounds per horse-power per hour, was obtained with the smallest load, about one-eighth its proper rating. A smooth curve represents the fall in the cost of power with increasing demand for power, up to about 100 H. P.

---

* *Trans.* Brit. Inst., N. A., 1895.

only 125 pounds pressure instead of 175, as originally designed. This engine gives its best results when the jackets are shut off on the second receiver and the low-pressure cylinder—presumably because the pressure is too high and temperature too great, causing waste of heat by excessive flow at and immediately before exhaust. It is proposed to reduce this pressure from that of the boiler, as now, to one-half or less, by the introduction of a reducing valve, and a better than even its now extraordinary performance is expected. The simple engine does its best work at ratios of about four and six, unjacketed and

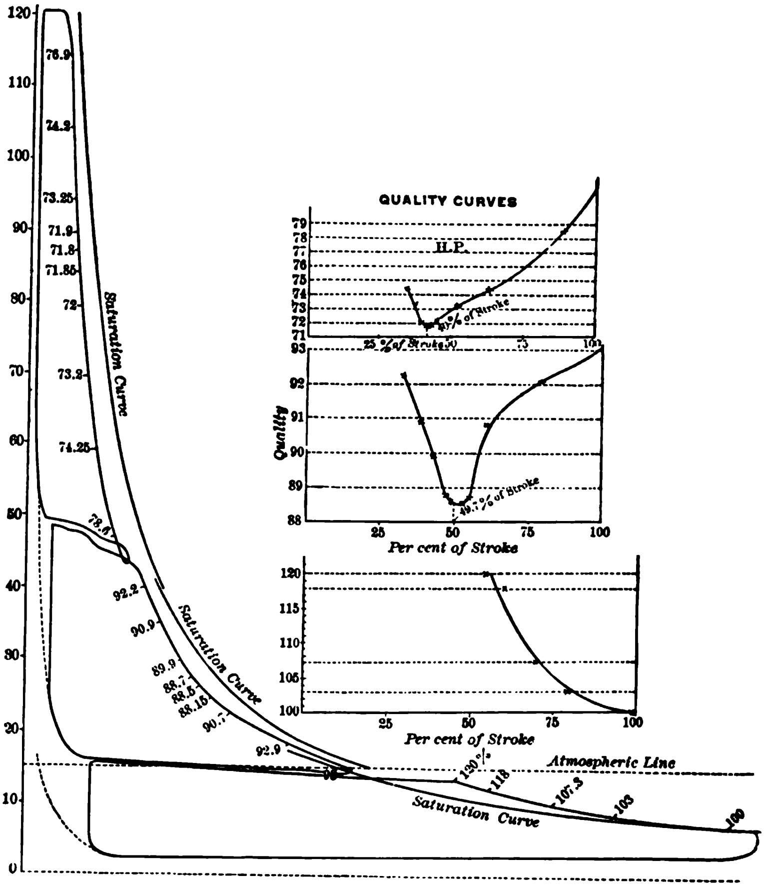

FIG. 79.—TRIPLE-EXPANSION CORLISS ENGINE OF SIBLEY COLLEGE
American Bank Note Co., N.Y.

(1) Maintain the temperature of the cylinder at such a point as will make the cylinder loss at admission a practical minimum.

(2) So adjust the conditions promoting freedom from cylinder condensation as to give as nearly as possible dry steam in the low-pressure cylinder at the termination of the expansion and the opening of the exhaust valve.

The Record for 120 Pounds is held, at this date, by the Milwaukee pumping engine, of which a full account was given by the writer in a paper published in the *Transactions* of the A. S. M. E. for 1893. It was observed that its economy was due, as already seen in the general case, to its excellent, almost ideal, cycle, to its small clearances, its effective jacketing, and a general excellence of design and construction, resulting in low friction-wastes and a very excellent vacuum. The combined diagrams for the engine, and the diagrams exhibiting the variation of the quality of steam, at and beyond the point of cut-off, will be found in the paper referred to. It is here only necessary to present the following summary of the results of its trial.

Computing the efficiency of the ideal representative case for this engine, and the wastes of the real engine, and comparing them with the results of test, the figures given in the succeeding table are obtained.* The wastes are computed for the low-pressure cylinder, and the assumption is made that all work is performed in that cylinder. The dynamic waste is taken, at the usual rating of the engine, as 10 per cent. of the delivered power; the internal heat-wastes are computed by the formula—

$$c = a \frac{\sqrt{rt}}{d},$$

in which a is taken, as in the Sandy Hook experiments, as 4, and $r = 19.55$, $t = 2.96$;

$$c = 4 \sqrt{\frac{2.23 \times 2.96}{74}} = 0.13932.$$

External wastes of heat are taken as 0.5 B. T. U. per square foot of exterior surface, and per degree difference between external and internal temperatures :

---

* "Initial Condensation and Heat-Wastes," Thurston ; *Trans.* Brit. Inst., N. A.

—a considerably less power than that for which the engine was designed.*

The best water-rate for the jacketed engine was found at 13.2 pounds and at a value of 113 I. H. P.

Comparing the work of this engine at various cut-offs, and with correspondingly varying terminal pressures, it is found that the desirable terminal pressure, the best water-rate being sought, is 5 pounds per square inch at exhaust from the low-pressure cylinder.

Studying the data supplied by a calorimetric analysis of this engine, the general fact is found to be that, under favorable conditions, the loss of heat from the wall of the cylinder during admission is about 20 B. T. U. per stroke for the high-pressure cylinder, 5 B. T. U. for the intermediate, and =18 B. T. U. —a negative quantity—for the low-pressure element. This indicates clearly the fact that the jacket is of no advantage on that particular cylinder, as then operated—a fact further confirmed by direct comparison of the performance of the engine, completely jacketed, with the same conditions except that the jacket on that cylinder is shut off. The magnitude and the sign of this quantity is thus useful to the engineer, and a key by which to determine the desirability of a jacket. If the heat absorption by the metal is found to be positive during admission, it is probably beneficial; if negative, wasteful. If it is a considerable amount, the jacket will be found to have great value; if small or negative, to be undesirable. But it is obvious, on the other hand, that this loss will always be positive, unless, through preliminary superheating or jacketing in the preceding cylinders of the series, the steam enters the steam-chest of the low-pressure cylinder effectively dried and even superheated, and the cylinder is held above the condensing point by other means than jacketing its own surfaces.

The two principles to be noted as determining the most economical disposition of provisions for insuring maximum economy and efficiency are:

---

* This is accounted for, in part if not wholly, by the fact that the engine was originally designed for 175 pounds of steam, and is actually, in these trials, operated with a boiler built for 125 only. Full-pressure trials are hoped for later when a boiler, now set, capable of safely carrying pressures of 300 to 400 pounds, is suitably connected up.

(1) Maintain the temperature of the cylinder at such a point as will make the cylinder loss at admission a practical minimum.

(2) So adjust the conditions promoting freedom from cylinder condensation as to give as nearly as possible dry steam in the low-pressure cylinder at the termination of the expansion and the opening of the exhaust valve.

The Record for 120 Pounds is held, at this date, by the Milwaukee pumping engine, of which a full account was given by the writer in a paper published in the *Transactions* of the A. S. M. E. for 1893. It was observed that its economy was due, as already seen in the general case, to its excellent, almost ideal, cycle, to its small clearances, its effective jacketing, and a general excellence of design and construction, resulting in low friction-wastes and a very excellent vacuum. The combined diagrams for the engine, and the diagrams exhibiting the variation of the quality of steam, at and beyond the point of cut-off, will be found in the paper referred to. It is here only necessary to present the following summary of the results of its trial.

Computing the efficiency of the ideal representative case for this engine, and the wastes of the real engine, and comparing them with the results of test, the figures given in the succeeding table are obtained.* The wastes are computed for the low-pressure cylinder, and the assumption is made that all work is performed in that cylinder. The dynamic waste is taken, at the usual rating of the engine, as 10 per cent. of the delivered power; the internal heat-wastes are computed by the formula—

$$c = a\frac{\sqrt{rt}}{d},$$

in which a is taken, as in the Sandy Hook experiments, as 4, and $r = 19.55$, $t = 2.96$;

$$c = 4\sqrt{\frac{2.23 \times 2.96}{74}} = 0.13932.$$

External wastes of heat are taken as 0.5 B. T. U. per square foot of exterior surface, and per degree difference between external and internal temperatures:

---

* "Initial Condensation and Heat-Wastes," Thurston; *Trans.* Brit. Inst., N. A.

above 12; although its best duty is given at a ratio of 20. As actually operated, it is probable that costs are such as to permit the economical adoption of a somewhat higher ratio.

Summarizing the Case, for the modern, high-grade engine working with, it may be assumed, 150 pounds of steam, absolute, and at various ratios of expansion within a range somewhat exceeding that customarily adopted by the contemporary designer, we may lay down a diagram, as in Fig. 81, in illustration of the point attained to-day in the improvement of the steam engine. The lower curve, as before, represents the computed, ideal, case; and this, with from twenty to thirty expansions, demands about 9,000 B. T. U., or perhaps 8½ pounds of feed-water per H. P. per hour. External wastes, including dynamic, or friction, losses, add ten per cent. to the costs. External wastes, in the case of the simple engine, represented by the added ordinates, up to the highest full line on the diagram, immediately restrict the expansion to a ratio of 8 or 9, and raise the cost to 24,000 B. T. U. as a minimum. Compounding the engine cuts these wastes in half, substantially, and reduces cost to 17,500 B. T. U. at the higher ratio, 10, while the triple-expansion arrangement, reducing the internal wastes to perhaps one-third those of the simple machine, extends the available expansion to a ratio of 16 and reduces cost to 14,000 B. T. U. per

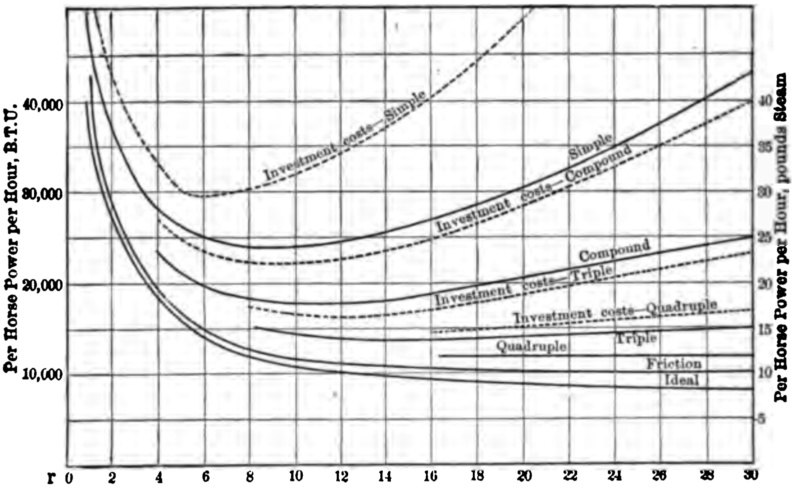

FIG. 81.—COMPARATIVE EFFICIENCY OF ENGINES

I. H. P. Placing four cylinders in series, finally, the cost drops to 12,000 B. T. U, and the proper ratio of expansion becomes twenty or more.

The dotted curves show the financial effect of investment cost in reducing the expansion and in increasing costs, the investment cost being expressed in values of the thermal unit. The total costs are thus increased from an eighth to one-fourth, and the available expansion correspondingly reduced by somewhat similar figures.*

Professor Unwin, in 1895, gave the following as the records to that date, with saturated steam: †

MINIMUM STEAM CONSUMPTION.

	I. H. P.	Steam Pressure.	Speed of Piston.	Pounds Steam I. H. P. per Minute.
Simple Engine:				
Sulzer	284	87	372	18.4
Corliss	137	62	....	17.5
Compound:				
Dujardin	548	90	570	13.46
Sulzer	247	85	493	13.35
Wheelock	590	160	612	12.84
Leavitt	643	135	371	12.16
Triple Expansion:				
Sulzer	615	141	516	11.85
Allis	574	120	203	11.68
Compound; Superheated Steam:				
Schmidt	76	180	380	10.17

The Promise of Higher Pressures and the potentiality of heat conversion in thermodynamic engines, in that field as yet incompletely explored and lying quite beyond the range of present practice, may be judged partly by studying the thermodynamic case, partly by such sporadic and isolated instances of attempted construction as the past history of the steam engine reveals. Since the gain to be anticipated must probably follow a logarithmic law, it is obvious that some such advance as is

---

* "Condensation and Heat-Wastes," *Proc.* Inst. Naval Arch. of G. B., 1895. R. H. Thurston.

† *Proceedings* Brit. Inst. C. E., May 2, 1895.

measured by the relation of the logarithms of proposed pressures to those actually familiar to us, at the moment, will be experienced. Comparing steam of 100 pounds pressure with that at 1,000 pounds, we can hardly expect, from simple increase of pressure alone, more than fifty per cent. gain; assuming, as seems not at all improbable, that the actual may be given that ratio to the ideal performance now reached in the best engines operating at the lower pressure. Taking the best work of good engines of to-day as about 12,000 B. T. U. at 100 pounds pressure, the real case will give not far from, we will say, 8,000 B. T. U. at 1,000. We can hardly expect much better than about seventy per cent. of the theoretical figure for the Rankine cycle—or for the cycle of Carnot, should we ever succeed in reproducing its form in the actual engine.

The experiments of Perkins sixty years ago, and those of Albans a half-century ago, have no value for our purpose other than as perhaps proving the practicability of controlling such pressures as 800 and 1,000 pounds and upward within the steam boiler. Neither produced an engine approaching, in design and construction, the modern type of engine, or approximating our present performance at even moderate pressures.

Albans reported a consumption of 4.1 to 5.3 pounds of fuel per horse-power per hour, and the sons of Perkins, a generation later, employing steam of 350 pounds and upward, reported 1.25 pounds.* No well-proportioned engines have of late years been set in operation under circumstances affording a good gauge of the gain to be anticipated by this radical departure in the use of higher pressures.

The work of the younger Perkins, above alluded to, is illustrated in the performance of the S. S. *Anthracite*, a small steamer having triple engines, $7\frac{3}{4} + 15\frac{13}{16} + 22\frac{13}{16} \times 15$ inches, carrying steam at 350 pounds. The efficiency of the ideal case, as computed above, would be about 0.26, and 9,800 B. T. U. per I. H. P. per hour would be demanded. The report of Sir Frederick Bramwell states the following as the outcome of his trials of the ship:

Fuel per I. H. P. per hour	1.71
"Combustible" per I. H. P. per hour	1.625
Feed-water per I. H. P. per hour	17.8
B. T. U. per I. H. P. per hour	20,022.

---

* *History of the Growth of the Steam Engine*, pp. 325–328.

The cylinder condensation ranged from above 30 per cent., in the high-pressure, to 8.5 per cent. in the low-pressure cylinder.[*]

The Ideal Case is easily computed for any assumed pressure. Thus, for example, taking the initial pressure as 500 pounds per square inch, the back pressure in one case as 5 pounds, in another as 2, and the ratio of expansion as 64, in both cases we have the following, adopting Rankine's methods of computation:[†]

DATA AND RESULTS.

$$p_1 = 500 \text{ lbs.}; \; p_2 = 6 \text{ lbs.}; \; p_3 = 5 \text{ lbs.}; \; r = 64.$$

Mean effective pressure	31 lbs.
Efficiency of fluid	0.2575
B. T. U. per I. H. P.	10,200
Steam per I. H. P. per hour	9.25 lbs.
Coal per I. H. P. per hour	1.03 "

Reducing the back pressure to 2 pounds per square inch, these figures are improved to the extent of ten per cent., and we have:

Efficiency of fluid	0.28
B. T. U. per I. H. P. per hour	9,200
Steam per I. H. P. per hour	8.5 lbs.
Coal per I. H. P. per hour	0.9 "

It is here assumed that 1,100 B. T. U. are available per pound of steam with a good boiler and heater system, and that the area of heating surface is ample to insure an evaporation of nine pounds of water per pound of good fuel. For unity efficiency, this would give out 2.3 pounds of steam and 0.26 pounds of fuel per I. H. P. per hour.

Assuming the total wastes of heat to be measured by the percentage $w = a\sqrt{r}$, and the value of a for an engine of considerable size to be, as found for large mill engines, about 0.15, we obtain the loss for the simple engine, $w = 0.15 \times 8 = 1.2$, and the total expenditure of feed-water per horse-power per hour here becomes, for the two cases respectively, 20 and 18 pounds. Taking the wastes as inversely as the number of cylinders in series, within the limits here observed, we have the

---

[*] *Handbook of Engine and Boiler Trials*, Thurston. N. Y., Wileys, 1895.

[†] *Vide* the writer's *Manual of the Steam Engine*, vol. i., p. 613, for such computations.

following for the computed and probable costs of power in the two cases:

EFFICIENCIES OF MULTIPLE-CYLINDER ENGINES.

Form of engine	$p_3 = 5$,	$p_3 = 2$.			
Ideal case	9.25	8.5	pounds steam	per I. H. P.	per hour.
Simple jacketed	20	18	"	"	"
Double expansion	14.5	13.5	"	"	"
Triple expansion	13	11.5	"	"	"
Quadruple expansion	12	10.5	"	"	"

Were the same investigation made for steam pressures approximating 1,000 pounds, the results would exhibit but 10 per cent. better figures. Compared with the now usual figure, 100 pounds per square inch of boiler pressure, the elevation of the pressure 400 per cent. would give, as seen already, about 30 per cent. gain, and increase to 1,000 per cent. about 50 per cent. gain. It is further obvious that if a well-designed and efficient, yet not excessively expensive, engine could be adapted to the employment of these higher pressures the gain in efficiency might, in many cases, handsomely repay the costs.

The Sibley College High-pressure Quadruple-expansion Experimental Engine.—The builders of the engine to be described were Messrs. Thomas Hall and C. H. Treat, both members of the American Society of Mechanical Engineers, and both graduates of Sibley College and Cornell University, and at the time of its completion, in the graduate department of the University. Mr. Hall had taken the degree of Master in Engineering, and had entered upon his candidacy for the Doctor's degree in Philosophy. Mr. Treat was a candidate for the Master's degree in Engineering. Their professional training and their practical experience and skill combined to fit both men well for the task undertaken by them.

The work was carried on, as opportunity permitted in the intervals of more imperative duties, for a period of about three years, and the complete engine finally turned over to the University and Sibley College as an experimental engine in the autumn of 1895. The work was that of the two young mechanics, entirely unassisted. They introduced several new and interesting as well as valuable features into the design, and the construction is most creditable to the makers and to their preceptors in both classroom and workshop.

The essentials of success were recognized to be the production of a good steam distribution, as nearly as possible illustrating the cycle of the ideal heat engine; effective protection against wastes, either thermal or dynamic; and safe, permanent, and light construction. High steam pressure, high piston speed, complete expansion, were admittedly obvious elements, as already seen, of maximum efficiency. It was determined to adopt steam of 500 pounds pressure and to design an engine for 300 revolutions per minute and upwards, with a boiler capable of sustaining 1,000 pounds pressure.

Not only were great originality and intelligence and good judgment shown in the design and construction of this new engine, but in matters of minor detail even greater difficulties, perhaps, were met and surmounted, and the vanquishing of these minor obstacles, which are apt in such cases to prove the real impediments to success, may be accepted as the best possible measure of the ability and the persistence of the builders of the machine. Making injectors and water-gauges practically workable, and the final substitution for these apparatus of a special pump and of a new method of water-level indication, are as creditable bits of work as are the details of the engine and of the boiler themselves. Provision was made in the design for the prosecution of various investigations likely in time to become of interest, and probably of importance; and the whole outcome of this work, while no one would claim for it freedom from defect or absolute perfection in any respect, in the opinion of all who have been competent to judge after seeing it in operation, may be pronounced most satisfactory.

The Description of the Engine is here prefaced to the detailed account of its performance,* in the language, substantially, of its builders:

"The engine was built in the Sibley College shops, Cornell University. It was designed for an experimental engine. It involves several new features, including a special form of brake capable of keeping the load automatically constant.

"The principal considerations in the design of the engine were, first, that its construction should require as little labor as possible; second, that it should attain high economy.

"The real economy of a steam engine increases with increase in steam pressure and with the reduction of internal and external wastes. These wastes result from cylinder condensation, improper steam distribution, leaks, friction, and radiation.

---

* *Power*, July, 1895; *Sibley Journal*, 1895.

Cylinder condensation is usually much the greatest loss. The means of diminishing it are: (1) increasing the number of cylinders, and so reducing the range of temperature in any one cylinder; (2) making internal area a minimum and coating with non-conducting material; (3) jacketing; (4) superheating; (5) high rotative speed."

It was decided to use four cylinders. A fifth cylinder would probably have decreased the cylinder condensation loss enough to have considerably exceeded the added losses; but it would have increased the work of building, and the economic gain would have been small.

"The temperature of steam at 500 pounds absolute is 467 degrees Fahr. The flue gases are still higher. If they escaped at this high temperature there would be a very material loss in the efficiency of the whole plant. This loss was obviated, and at the same time cylinder condensation was reduced, by allowing the gases to 'reheat' the steam in the receivers, the hottest gases heating the hottest steam. This arrangement, together with the high rotative speed, makes steam jacketing far less important, and it was not attempted."

"Provision was made for experimenting with non-conductors on ends of piston, and on cylinder heads in the two low-pressure cylinders. The exposed area in the short, straight ports and in the valve orifices is very small. In engines having deep cylinder heads a large area is often left in direct communication with the interior, by making the steam fit at the end of the cylinder, instead of at the inner end of the head, as it should be, and is, in this engine. This area is just as productive of cylinder condensation as any other portion of the interior, and in many engines will be nearly as large as all the other areas combined."

The engine is shown in Fig. 62.* The cylinders are set close together, making it easy to fully and efficiently lag them, so that radiation loss will be small.

"The friction loss is also small for a quadruple of this size, being not far from ten per cent. at the normal load. The cranks are set alternately at 180 degrees, so that the forces acting on the shaft are nearly balanced and the pressure on the bearings is small. This is the best way of balancing an engine, the inertia of one piston and connecting rod being balanced by the next. The engine has run at five hundred revolutions per min-

---

* By permission of *Power*.

ute when resting on blocks and not fastened down in any way."

"A suitable valve gear for an experimental engine is a difficult problem. It must give good steam distribution. It must be capable of adjustment for a wide range of cut-off, and compression, and release should also be under easy control. For this engine it must be capable of running at high speed.

"Plain slide valves are not adjustable. Separate steam and exhaust valves of this type would have added very greatly to the work of construction, and would not have fulfilled the requirement of ease in adjustment. Corliss gearing would not have withstood the high speed contemplated. A suitable gearing required to be positively connected and also required ample port area, and quick opening and closing of the valves, also ease in adjustment."

The gearing shown in the engraving was finally worked out. The steam valves admit steam through a slot in centre. Steam is admitted by one edge of the slot and cut off by the other. Both events occur at each stroke of the valve, and the motion of the gearing need be only half as rapid as ordinarily, reducing the inertia effect to one-fourth. Spiral gears give this reduction of speed, and transmit the motion to the sliding-block movement on the front of the engine. This latter device operates to give the valves quick movement during admission, and reduces over-travel. It consists of a bell-crank carrying a block in the longer arm sliding in a slot in the wrist-plate. The other arm of the bell-crank lever is connected to the driving crank of the valve-motion driving shaft. "Two of these motions are necessary, one controlling the steam valve at one end of any cylinder and the other the steam valve at the other end. The reason for two is, that one motion can give quick movement only once in a complete rotation; but one end of a cylinder must have steam 180 degrees after the other in a double-acting engine. By referring to the cut it will be seen that lost motion in the lower connections will be much reduced by the sliding-block device. When the block is near the end of the slot the wrist-plate will not move at all. When at the centre of its travel the valves are wide open, and a little one way or the other makes no material difference."

"When the block is moving at the end of the slot the fly wheel may be turned thirteen out of thirty-two equal divisions of its circumference without producing any perceptible motion of the valve-arm, showing the extent to which over-travel of the valve is reduced. The valves are only one inch in diameter, yet some of the ports are more than three-eighths inch wide. As the valve passes over the port from one side to the other the port must always be completely opened during admission, no matter how early the cut-off." All steam-valve rods and rods transmitting motion to the sliding-block movement are made of bicycle tubing with ends brazed into them. The spiral gears are made of mild steel, to run in oil.

"The exhaust valves resemble the Corliss, and are driven by the crank at the end of the shaft. In case of accident, to stop the engine quickly, this crank may be loosened on the shaft, and so stop all the exhaust valves at once. This, in fact, is the usual method of stopping the engine, and proves both safe and handy. The steam valves lift, so that if an exhaust valve is left closed the steam in the cylinder is forced back into the previous receiver or into the boiler. If the valve is left open, on the other hand, steam may blow through into the next receiver. The receivers are provided with safety valves, so that the pressure in them can never become dangerous. By setting the engine at admission and changing this exhaust crank, steam may be blown through the entire engine. This is convenient in warming it up."

The stuffing-boxes are nearly long enough to prevent any of the rod exposed to steam reaching the outside air. They are packed with asbestos wicking and graphite. The deep stuffing-box is easy to keep tight.

All parts are strong enough to carry full steam pressure in either of the first three cylinders and 150 pounds in the low pressure. This admits of any combination desired.

"As the number of cylinders and the rotative speed is increased, the work lost in friction becomes a greater and greater item. It is a large percentage of the total friction. To reduce it, the journals should be made as small as possible consistent with strength. This demands that the shaft be made of the strongest material obtainable. The extra first cost is very small compared to the saving it will make in a few years. The shaft in this engine was forged by the Bethlehem Iron Company, out of their steel. It was the only piece made outside the Sibley College shops."

The rods are of steel.

The crank and cross-head pins are lubricated from oil cups at the end of the engine. Other bearings may be oiled by hand without difficulty.

"The cylinders are lubricated by a Swift lubricator on the steam pipe. Some difficulties were met with in the cylinder lubricators. Any lubricator having glass tubes or valve seats made of compositions which would melt at a low temperature would not answer. The valve seats would melt out, but would stand if replaced by pure lead ones, while the glass tubes would give way. The Swift lubricator was used with the lead valve seats. Ordinary heavy-cylinder oil is used. No trouble has been experienced from its burning out. The cylindqrs are all in fine condition and show that they are well oiled."

"The chimney gases may be sent to the receivers or direct up the chimney by turning the proper dampers. When going to the receivers the gases strike the first or high-pressure receiver, then the second, and finally the low pressure. The steam pressure in the low-pressure receiver does not run much over atmospheric pressure. Under some conditions it is much less. In some cases this receiver has cooled the gases down to less than 212 degrees Fahr."

"The brake consists of a heavy iron band, *Q*, the ends of which are connected by link *B* and lever *I*. The lever is connected to the nut which works up and down on screw *C*.

"Screw *C* is operated by gear *H*, which in turn is driven by the small pinion *G*. If the speed increases the governor balls rise, depressing the rod *D*, and thus causing dog *E* to engage with the lower bevel gear. These bevel gears are driven continuously by belt from the main shaft, the lower one forward and the upper one backward. The pinion *G* is keyed to rod *D*, but can slide along it axially. Now when *E* engages with the lower bevel gear, through *G* the screw *C* is driven counter-clockwise, thus tightening the brake. If the speed decreases, rod *D* will rise and *E* will engage with the upper bevel gear, when *C* will be driven clockwise, thus loosening the brake.

"In order to give the governor a greater or less range, the hand wheel *A* is used to adjust the leverage, thus shifting the point of attachment of link *B* to lever. A hand wheel is also connected with link *B*, for the purpose of adjusting the initial tension of the brake for different loads.

of its circumference without producing any perceptible motion of the valve-arm, showing the extent to which over-travel of the valve is reduced. The valves are only one inch in diameter, yet some of the ports are more than three-eighths inch wide. As the valve passes over the port from one side to the other the port must always be completely opened during admission, no matter how early the cut-off." All steam-valve rods and rods transmitting motion to the sliding-block movement are made of bicycle tubing with ends brazed into them. The spiral gears are made of mild steel, to run in oil.

"The exhaust valves resemble the Corliss, and are driven by the crank at the end of the shaft. In case of accident, to stop the engine quickly, this crank may be loosened on the shaft, and so stop all the exhaust valves at once. This, in fact, is the usual method of stopping the engine, and proves both safe and handy. The steam valves lift, so that if an exhaust valve is left closed the steam in the cylinder is forced back into the previous receiver or into the boiler. If the valve is left open, on the other hand, steam may blow through into the next receiver. The receivers are provided with safety valves, so that the pressure in them can never become dangerous. By setting the engine at admission and changing this exhaust crank, steam may be blown through the entire engine. This is convenient in warming it up."

The stuffing-boxes are nearly long enough to prevent any of the rod exposed to steam reaching the outside air. They are packed with asbestos wicking and graphite. The deep stuffing-box is easy to keep tight.

All parts are strong enough to carry full steam pressure in either of the first three cylinders and 150 pounds in the low pressure. This admits of any combination desired.

"As the number of cylinders and the rotative speed is increased, the work lost in friction becomes a greater and greater item. It is a large percentage of the total friction. To reduce it, the journals should be made as small as possible consistent with strength. This demands that the shaft be made of the strongest material obtainable. The extra first cost is very small compared to the saving it will make in a few years. The shaft in this engine was forged by the Bethlehem Iron Company, out of their steel. It was the only piece made outside the Sibley College shops."

in diameter, and 6½ feet long. It is left entirely solid, being neither pierced nor riveted. The heads are of wrought iron, and are fastened on by means of long one inch bolts reaching from head to head outside the drum. A 1¼-inch stay bolt also runs from head to head through the centre of the drum. These long bolts form an excellent safety device in case the safety valve did not work properly. They would stretch nearly half an inch before reaching their elastic limit, and thus the head would lift and allow the steam to escape in a case of extreme pressure. This would occur long before any of the other parts of the boiler could have reached their elastic limit, and would permit instant reduction of pressure at any rate of evaporation. None of the joints are in the flame. The ends of the drum and the heads are faced up in the lathe, and have *V* grooves turned in them, into which a copper ring is placed to secure a tight joint. The coils are connected to the headers by heavy right and left screw-joint couplings. These were put together very carefully, and none of them have shown a leak. Both the steam header and the cold-water return are screwed into the heads, while their other ends are plugged with screw joint and copper ring. A blow-off is screwed into the end of the cold-water return, so that any sediment collecting there may be blown out.

"The drum is supported by means of two pillars, and the tops of the coils are suspended from the brickwork.

"The boiler was built sufficiently strong to carry 1,000 pounds steam pressure, and was tested to 1,350 pounds, cold-water pressure. Both engine and boiler have been operated at 620 pounds steam pressure. The factor of safety in the heating coils is about 17; in the drum above 5."

The Methods of Conducting the Engine Trials in this case were those usual in the engineering laboratories; the steam being weighed by condensation in the special condenser provided by the laboratory, all instruments being carefully standardized. It is unnecessary to describe them in detail, as they have been already frequently and fully illustrated on earlier occasions, and described in standard treatises, and in papers published in the *Transactions* of the A. S. M. E. and elsewhere.*

It was found advisable to employ a specially constructed indicator with reduced piston-area, and great pains were taken

---

* *Vide* Carpenter's *Experimental Engineering*, or Thurston's *Engine and Boiler Trials*, and *Trans.* A. S. M. E., 1890 *et seq.*

"The brake is kept cool by means of water spraying upon it from holes punctured in lead pipe *J*. Though the varying conditions tending to produce a change of load can be kept quite constant, yet for the purpose of obtaining the load very accurately it was thought best to place a continuously recording drum at the extremity of the brake-arm. This is represented in the illustration by *L*. Drum *L* is driven at a speed proportional to that of the engine, by means of the reducing pulleys at *P*. The drum revolves once in fifteen minutes when the engine is running at a speed of 300 revolutions. A spring balance, *N*, weighs the load. The recording pencil *K* marks the zero load or the weight of the brake-arm, while *M* marks the weight of the brake-arm plus the load; the difference between these two lines on the drum represents the actual brake-load. When the drum has revolved once it is pulled up a notch. In order to obtain the average brake-load during a test, these drum diagrams are integrated by a planimeter, and the area divided by the length, thus giving the average height, which is to be multiplied by the scale of the spring.

"The boiler was built specially for this engine, and is of sufficient capacity to furnish steam for the engine, blower, condenser, and injector. As will be seen from the illustration, it is of a vertical coiled water-tube pipe. Its principal features are simplicity, a minimum number of joints, rapid circulation, durability, and safety for very high pressures.

"The heating surface is composed of five concentric coils. Each of these coils is a continuous welded length of extra heavy lap-welded 1¼-inch pipe, and is about 100 feet long. At the bottom and top of these coils are shown the two large double extra heavy tubes leading to the drum above. These form headers for the coils, the short one being the steam header and the other the cold-water return. They have about the same sectional area as the sum of the five coils. The cold-water return tube runs into the drum below the water-line and the steam header slightly above, the water-line being about midway in the drum. The steam is drawn off through dry pipe *B* in the top of the drum. This pipe has a great many small holes drilled in the top side and a few in the bottom. The safety valve is connected to this pipe just at the end of the boiler, and is of the common weighted-lever type.

"The drum is of mild steel, lap-welded ⅝ inch thick, 12 inches

The first test was made with a boiler pressure of 400 pounds, the boiler having been previously tested up to above 1,000 pounds under cold-water pressure.

The result was, with the development of 12.4 I. H. P., a consumption of 149 pounds of steam per hour, 12 pounds per I. H. P. The friction of the engine proved to amount to 13.7 per cent., and the steam, per D. H. P., measured 13.9 pounds per H. P. per hour. The gauge was retested by comparison with a Crosby "square-inch" test-gauge. This calibration checked to substantial identity with that previously made. The Crosby gauges on the receivers were similarly tested and found satisfactorily accurate. The vacuum gauge, an S. and B. instrument, was tested by comparison with a standard formed by a pure-mercury column. Such checks were secured at intervals throughout the series of trials, and corrections were introduced wherever errors were measurable.

FIG. 82.

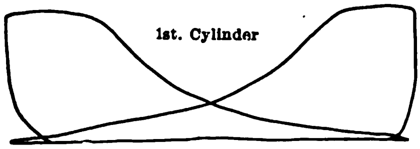

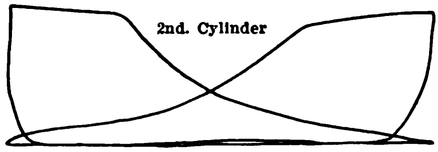

FIG. 83.

A second trial was made at pressures ranging up to 500 pounds, and the engine developed 14.34 I. H. P., with a consumption of 9.67 pounds of steam per H. P. per hour. The D. H. P. measured 12.7, and the steam per D. H. P. 10.9 per H. P. per hour. The engine, smoothed up by working, had reduced its friction to 11 per cent.

A third trial at 300 pounds pressure gave 11.26 I. H. P. on 10.8 pounds of sensibly wet steam.

A fourth trial nearly duplicated the results of the first, though with only 300 pounds steam pressure. The I. H. P. measured 11.9, demanding 12.35 pounds of steam per H. P. per to attain satisfactory accuracy and to standardize it thoroughly. In the work of testing, the main difficulties arose from the impossibility of finding water-gauge glasses that were durable. No glass in the market proved suitable to this case, and, in spite of many and ingenious attempts to make special constructions, and every precaution in the way of shielding the glass from currents of air, and of providing against those temperature and pressure changes which seemed to be the principal causes of their breakage, it was finally concluded to give up all attempts to utilize that system of indication of the water-level. The last and most successful method was that of introducing a float of aluminium into the stand-pipe, leading a fine wire from it upward through a long, nicely fitted, and unpacked hole in the cap, over a pulley, and down to a convenient point at which a counterbalance of nicely adjusted weight was suspended. This arrangement required constant attention; but it proved to be safe and accurate when properly made and handled. Much trouble was met with in the endeavor to find a form of injector which would feed against the high pressures here adopted. The best was a home-made apparatus, produced by reconstructing an old injector, giving it a smaller and suitable size of nozzle. A special make of steam pump, guaranteed for five hundred pounds pressure, did its work fairly well; but it was not always reliable. In fact, the work was so much subject to interruptions from these causes that, except for the fact that the basing of the results on weighings of steam delivered made time a less important element than in the older method of test by weighing feed-water, many trials would have been necessarily rejected, and the work to date far less complete than it actually is. It is considered desirable, as it is, to supplement this work by still more extensive determinations after these difficulties have been—as they undoubtedly will be, after a time—more completely overcome.* Enough can now be presented, however, to give a good idea of the promise and potentialities of such pressures as were dealt with.

The steam gauge was made by Schaeffer and Budenberg, graduated to 1,000 pounds by comparison with a mercury column, and standardized by Messrs. Hall and Treat on the Emery testing-machine of the laboratory.

---

[*] A new Worthington pump made for this particular work is now giving entire satisfaction.

tion, resulted in showing, for a single half-hour, 16.95 I. H. P. on 10.75 pounds of steam per hour per H. P., and for a second part, 16.8 I. H. P. on 11.1 pounds. The friction measured 10.8 per cent.

The tenth series of measurements, occupying three hours, and taking observations for two and a half hours, with steam held very smoothly at 300 pounds pressure, averaged 11.07 I. H. P. at 9.65 pounds of steam supplied per H. P. per hour. The friction amounted to just 10 per cent.

The eleventh and twelfth sets of observations, the runs being good but very short—an hour and a half and one hour respectively—averaged 11.6 I. H. P. on 14.34 pounds of wet steam. The friction rose, in these cases, to 12.8 per cent.

Trials eleventh to thirteenth, inclusive—making, together, a three and a half hour run—averaged, at 300 pounds pressure, 8.07 I. H. P. and 6.87 D. H. P., 14.9 per cent. friction, for No. 11. The figures became 8.55 and 7.19 for No. 12, and 9.53 and 8.8 for No. 13. The steam consumption ranged from 12 pounds in the latter to 18.75 in the first of this series of three sets of observations, as referred to the indicated power.

The fourteenth trial was made at 200 pounds steam, producing 5.02 I. H. P., 3.75 D. H. P.; the steam measured 17.3 per I. H. P., and the friction became 25.3 per cent.

The fifteenth trial repeated the last in respect to steam pressure, and averaged, for three hours, 5.91 I. H. P. on 14.7 pounds steam per H. P per hour.

The sixteenth trial was a short one, but at 500 pounds pressure. The average for one hour of smooth running gave 16.08 D. H. P. at 10.54 pounds of steam consumed per H. P. per hour. The indicated power measured 17.2, and the engine demanded 9.75 pounds of steam per H. P. per hour. The friction fell, at this comparatively high power, to 6.5 per cent.

The seventeenth trial was made with but 125 to 140 pounds pressure, and gave an average of 5.42 I. H. P. on 12.64 pounds steam per H. P. per hour. The brake power measured 3.76, and the steam 18.19 pounds, wet from the boiler, equivalent to 17.72 pounds dry.

The preceding trials of the engine were, as is obvious from the record, quite as much a set of experiments looking toward the removal of existing difficulties in the use of high-pressure steam as to the determination of the economical value of such steam pressures. The unending increase in the difficulty of satisfactorily designing for such pressures, and of operating with them, has been appreciated most thoroughly, probably, by the boiler manufacturers, who have been called upon during the last generation to supply steam boilers for steadily rising pressures, ranging from 25 pounds in marine practice, in the middle of the century, to 200 and 250 pounds to-day. In the present case, however, no trouble was found in the construction or operation of the boiler itself, but mainly with the feed-water supply and the water-level indication. No doubt is felt of being ultimately able to overcome these difficulties thoroughly, and it is anticipated that we may, after a short time, perhaps, be given more extended and more complete collections of data for 500 pounds pressure, or even more.

The whole series of tests which have been now described were carried on by the designers of the engine and boiler employed, and they were afforded every assistance that the college could furnish. Their work was reviewed by Mr. Preston and other members of the college faculty; all recognize both its value and its still incomplete range and detail and its unfinished condition.

The eighteenth trial was made after the engine had been formally conveyed to the college for use as an experimental engine by its builders, and in the course of advanced laboratory work. The observers were Messrs. J. H. Mitchell and N. S. Reeder, whose experience and special skill were deemed particularly excellent in this field. They were aided by Mr. Eldredge, a member of the college faculty and on the staff of the Department of Experimental Engineering, a member of the A. S. M. E. The methods were substantially the same as those already described and commonly employed in regular laboratory work. The usual delays from newly discovered difficulties delayed the work from time to time; but the results in the tables presently to be given were finally obtained with satisfactory accuracy. The tables and calorimetric measurements were worked up by the method of Hirn, and results computed for one of the most satisfactory tests by the designers of the engine as well as for this last experiment. These figures, although not at maximum pressure, will be interesting and valuable as showing the general distribution of heat and of mechanical energy throughout the series of steam cylinders. The second of this pair of trials shows tion, resulted in showing, for a single half-hour, 16.95 I. H. P. on 10.75 pounds of steam per hour per H. P., and for a second part, 16.8 I. H. P. on 11.1 pounds. The friction measured 10.8 per cent.

The tenth series of measurements, occupying three hours, and taking observations for two and a half hours, with steam held very smoothly at 300 pounds pressure, averaged 11.07 I. H. P. at 9.65 pounds of steam supplied per H. P. per hour. The friction amounted to just 10 per cent.

The eleventh and twelfth sets of observations, the runs being good but very short—an hour and a half and one hour respectively—averaged 11.6 I. H. P. on 14.34 pounds of wet steam. The friction rose, in these cases, to 12.8 per cent.

Trials eleventh to thirteenth, inclusive—making, together, a three and a half hour run—averaged, at 300 pounds pressure, 8.07 I. H. P. and 6.87 D. H. P., 14.9 per cent. friction, for No. 11. The figures became 8.55 and 7.19 for No. 12, and 9.53 and 8.8 for No. 13. The steam consumption ranged from 12 pounds in the latter to 18.75 in the first of this series of three sets of observations, as referred to the indicated power.

The fourteenth trial was made at 200 pounds steam, producing 5.02 I. H. P., 3.75 D. H. P.; the steam measured 17.3 per I. H. P., and the friction became 25.3 per cent.

The fifteenth trial repeated the last in respect to steam pressure, and averaged, for three hours, 5.91 I. H. P. on 14.7 pounds steam per H. P per hour.

The sixteenth trial was a short one, but at 500 pounds pressure. The average for one hour of smooth running gave 16.08 D. H. P. at 10.54 pounds of steam consumed per H. P. per hour. The indicated power measured 17.2, and the engine demanded 9.75 pounds of steam per H. P. per hour. The friction fell, at this comparatively high power, to 6.5 per cent.

The seventeenth trial was made with but 125 to 140 pounds pressure, and gave an average of 5.42 I. H. P. on 12.64 pounds steam per H. P. per hour. The brake power measured 3.76, and the steam 18.19 pounds, wet from the boiler, equivalent to 17.72 pounds dry.

The preceding trials of the engine were, as is obvious from the record, quite as much a set of experiments looking toward the removal of existing difficulties in the use of high-pressure steam as to the determination of the economical value of such steam pressures. The unending increase in the difficulty of satisfactorily designing for such pressures, and of operating with them, has been appreciated most thoroughly, probably, by the boiler manufacturers, who have been called upon during the last generation to supply steam boilers for steadily rising pressures, ranging from 25 pounds in marine practice, in the middle of the century, to 200 and 250 pounds to-day. In the present case, however, no trouble was found in the construction or operation of the boiler itself, but mainly with the feed-water supply and the water-level indication. No doubt is felt of being ultimately able to overcome these difficulties thoroughly, and it is anticipated that we may, after a short time, perhaps, be given more extended and more complete collections of data for 500 pounds pressure, or even more.

The whole series of tests which have been now described were carried on by the designers of the engine and boiler employed, and they were afforded every assistance that the college could furnish. Their work was reviewed by Mr. Preston and other members of the college faculty; all recognize both its value and its still incomplete range and detail and its unfinished condition.

The eighteenth trial was made after the engine had been formally conveyed to the college for use as an experimental engine by its builders, and in the course of advanced laboratory work. The observers were Messrs. J. H. Mitchell and N. S. Reeder, whose experience and special skill were deemed particularly excellent in this field. They were aided by Mr. Eldredge, a member of the college faculty and on the staff of the Department of Experimental Engineering, a member of the A. S. M. E. The methods were substantially the same as those already described and commonly employed in regular laboratory work. The usual delays from newly discovered difficulties delayed the work from time to time; but the results in the tables presently to be given were finally obtained with satisfactory accuracy. The tables and calorimetric measurements were worked up by the method of Hirn, and results computed for one of the most satisfactory tests by the designers of the engine as well as for this last experiment. These figures, although not at maximum pressure, will be interesting and valuable as showing the general distribution of heat and of mechanical energy throughout the series of steam cylinders. The second of this pair of trials shows

a lower degree of reheating and a much less satisfactory vacuum than the first, and their comparison affords some clue to the value of reheating with multiple-cylinder engines. Difficulty in the last experiments was mainly found to be that coming of a waste of steam through the independent feed-pump which it was endeavored to use, and the pressure was only held up by throttling.

The combined diagram for this case is presented in the inserted plate, Fig. 85, and in succeeding figures, as worked out by careful measurement of the diagrams and comparison with the saturation curve for the weight of steam inclosed in the cylinder at cut-off. This process has been fully described in earlier volumes of the *Transactions* of the A. S. M. E., by Professor Carpenter and the writer, and fully illustrated, as, for example, in the case of the Milwaukee pumping engine.* The saturation curve shown in the combined diagrams is that of a weight of dry and saturated steam equal to that worked in the engine in each cycle and without becoming either wet or superheated. The comparison with this of the abscissas of the engine diagram as obtained with the indicator, thus gives a measure of the variation in volume produced by either partial condensation or by superheating, and thus a correct determination is made of the quality of the steam at every instant in its progress through the engine.

In the high-pressure engine, the steam, wet at entrance into the high-pressure cylinder, becomes steadily drier as expansion progresses, until, at the opening of the exhaust, it approximates dryness, becoming dry and saturated at about three-fourths stroke in the first intermediate cylinder, wet throughout the stroke of the second intermediate, and so continues through the low-pressure cylinder and up to final exhaust into the condenser. This case, it will seem, is comparable with the work of the Perkins steamer *Anthracite*. The results attained, however, are considerably better, notwithstanding the fact that this engine is but of about ten per cent. the power of that machine.

The Calorimetric Analysis of this engine presents many points of interest, and may prove suggestive as well as instructive. The following table, although not that exhibiting the highest efficiencies or at full pressure, is especially well worked up, and

---

* *Trans.* A. S. M. E., 1893, vol. xv., p. 313; "The High-Pressure Multiple-Expansion Engine," R. H. Thurston.

is therefore given as developed in regular work in the Sibley College laboratories. The work was done under the supervision and direction of the officers of the college. The accompanying tables present the data and results of this experimental investigation in the form customary in these laboratories, which is, perhaps, at once as concise and as full as, on the whole, is desirable.

The ideal Rankine cycle would demand about 8,100 B. T. U. per I. H. P. per hour, and at 1,100 B. T. U. supplied per pound by the combustible, the weight of fluid worked would be 7.36, or, in the Carnot system, about seven pounds per I. H. P. per hour. The best actual performance indicated a waste of above one-third; and the fuel and steam consumption, as well as the quantity of heat demanded, exceeded the ideal figures by 38 per cent.—amounting to 9.27 pounds of steam in the dry and saturated condition, and to 225 B. T. U. per minute per I. H. P. The mechanical efficiency of the engine was excellent for so small a machine—86.88 per cent., at 11 horse-power. The ratio of expansion was probably too large, for best effect at this pressure, by at least twenty-five per cent. It is, perhaps, even too great for 500 pounds pressure.

a lower degree of reheating and a much less satisfactory vacuum than the first, and their comparison affords some clue to the value of reheating with multiple-cylinder engines. Difficulty in the last experiments was mainly found to be that coming of a waste of steam through the independent feed-pump which it was endeavored to use, and the pressure was only held up by throttling.

The combined diagram for this case is presented in the inserted plate, Fig. 85, and in succeeding figures, as worked out by careful measurement of the diagrams and comparison with the saturation curve for the weight of steam inclosed in the cylinder at cut-off. This process has been fully described in earlier volumes of the *Transactions* of the A. S. M. E., by Professor Carpenter and the writer, and fully illustrated, as, for example, in the case of the Milwaukee pumping engine.* The saturation curve shown in the combined diagrams is that of a weight of dry and saturated steam equal to that worked in the engine in each cycle and without becoming either wet or superheated. The comparison with this of the abscissas of the engine diagram as obtained with the indicator, thus gives a measure of the variation in volume produced by either partial condensation or by superheating, and thus a correct determination is made of the quality of the steam at every instant in its progress through the engine.

In the high-pressure engine, the steam, wet at entrance into the high-pressure cylinder, becomes steadily drier as expansion progresses, until, at the opening of the exhaust, it approximates dryness, becoming dry and saturated at about three-fourths stroke in the first intermediate cylinder, wet throughout the stroke of the second intermediate, and so continues through the low-pressure cylinder and up to final exhaust into the condenser. This case, it will seem, is comparable with the work of the Perkins steamer *Anthracite*. The results attained, however, are considerably better, notwithstanding the fact that this engine is but of about ten per cent. the power of that machine.

The Calorimetric Analysis of this engine presents many points of interest, and may prove suggestive as well as instructive. The following table, although not that exhibiting the highest efficiencies or at full pressure, is especially well worked up, and

---

* *Trans.* A. S. M. E., 1893, vol. xv., p. 313; "The High-Pressure Multiple-Expansion Engine," R. H. Thurston.

II.

SIBLEY COLLEGE, DEPARTMENT OF EXPERIMENTAL ENGINEERING.

DATA AND RESULTS. TRIPLE-EXPANSION ENGINE.

Made by N. S. Beeder, J. H. Mitchell. Date, May 12, 1896.

Kind of engine, quadruple expansion	
Duration of run ... hours	3
Revolutions per minute	290
Temperature condensing water, cold ... degrees Fahr.	68.95
" " warm ... degrees Fahr.	83.33
" condensed steam	95.38
" engine room	96.2
" external air	64.9
Boiler pressure gauge ... pounds	393.9
Barometer, 29.27 inches ... pounds	14.36
Condenser, 21.36 inches high ... pounds	10.48
Boiling temp., atmospheric pressure ... degrees Fahr.	210.96
Total steam per hour, *C*, for engine ... pounds	129.3
Total. condensing water per hour ... pounds	9,195
Wt. condensing water per pound steam	71.1
Total I. H. P.	10.634
" D. H. P.	9.217
Mechanical efficiency	87.22
Moisture in steam ... per cent.	.94
Steam per I. H. P. per hour, actual ... pounds	12.15
" " I. H. P. " " corrected, cal ... pounds	12.03
" " D. H. P. " " " " ... pounds	13.89
*Water-rate of perfect engine	7.54
Thermodynamic efficiency	29.4
Ratio actual to theoretical water consumption	1.61
Heat supplied per hour B. T. U., by boiler	154,885
" discharged per hour B. T. U	140,446
" utilized per hour B. T. U	27,063
B. T. U. per I. H. P. per minute	242.7
Ratio of expansion from combined card	80.1

	H. P.	L. P.	L. P.	
Diameter of cylinder ... inches	2.344	3.969	6.977	10.266
Length of stroke ... inches	4.5	4.5	4.5	4.5
Diameter of piston-rod ... inches	.5	.625	.875	1.125
Piston displacement crank end, cubic inches	18.565	55.403	171.704	371.606
" " head " " "	19.449	55.710	172.395	372.6
Volume of clearance, " " per cent	2.14	1.99	2.79	3.94
" " " crank " " "	1.88	1.99	2.79	3.94
Make of indicator	Thompson.			
Spring ... pounds per inches	260.6	100	30	10
Length of brake-arm ... feet	4.8021			
Brake load ... pounds	55.046			
Quality of steam at cut-off	51.5	71.5	84	54.5
" " " " release	90.5	100	Super.	100
Steam-chest pressure gauge	....	....	....	....
Cut-off crank end, per cent. stroke	22.21	29.67	30.34	27.16
" head " " "	26.45	34.02	33.72	31.83
Release crank " " "	100	97.27	98.51	100
" head " " "	100	97.52	100	97.29
Compression crank " "	1.08	10.7	10.0	5.92
" head " "	0	4.64	7.58	8.50
Absolute pressure at point of cut-off ... pounds	265.34	101.56	37.35	18.27
" " " release ... pounds	120.37	55.45	18.98	6.72
" back pressure ... pounds	120.37	47.06	17.04	5.08
I. H. P. head	1.366	1.625	1.240	1.444
I. H. P. crank	.786	1.452	1.481	1.240
Total I. H. P	2.152	3.077	2.721	2.684
Steam per I. H. P. at point cut-off, per diagram	5.10	7.50	7.65	6.12
" " " " release, "	9.85	11.85	12.69	10.07
Distribution of work. H. P. as 1	20.23	28.93	25.58	25.28

I.

SIBLEY COLLEGE, DEPARTMENT OF EXPERIMENTAL ENGINEERING.

DATA AND RESULTS. TRIPLE-EXPANSION ENGINE.

Made by Messrs. Hall and Treat, Sibley College, Cornell University. Date, Feb. 14, 1896.

Kind of engine, quadruple expansion	
Duration of run, hours	6¼
Revolutions per minute	286.2
Temperature condensing water, cold, degrees Fahr.	34.87
“ “ “ warm, degrees Fahr.	41.27
“ condensed steam	58.24
“ engine room	73.80
“ external air	31.30
Boiler pressure gauge, pounds	279.2
Barometer, 29.154 inches, pounds	14.306
Condenser, 25.43 inches high, pounds	12.479
Boiling temp., atmospheric pressure, degrees Fahr.	210.75
Total steam per hour, C, for engine, pounds	106.53
Total, condensing water per hour, pounds	16,632
Wt. condensing water per pound steam	156.15
Total I. H. P.	11.095
“ D. H. P.	9.606
Mechanical efficiency	86.88
Moisture in steam, per cent.	2.49
Steam per I. H. P. per hour, actual, pounds	9.51
“ “ I. H. P. per hour corrected, cal, pounds	9.27
“ “ D. H. P. “ “ “ “, pounds	10.81
* Water-rate of perfect engine	6.86
Thermodynamic efficiency	31.44
Ratio actual to theoretical water consumption	1.38
Heat supplied per hour B. T. U., by boiler	125,547
“ discharged per hour B. T. U.	109,240
“ utilized per hour B. T. U.	28,236
B. T. U. per I. H. P. per minute	225.7
Ratio of expansion from combined card	82.9

	H. P.	1st I. P.	2d L. P.	L. P.
Diameter of cylinder, inches	2.344	3.969	6.977	10.266
Length of stroke, inches	4.5	4.5	4.5	4.5
Diameter of piston-rod, inches	.5	.625	.875	1.125
Piston displacement crank end, cubic inches	18.565	55.403	171.794	371.606
“ “ head “ “ “	19.449	55.710	172.395	372.6
Volume of clearance, “ “ per cent.	2.14	1.99	2.79	3.94
“ “ “ crank “ “ “	1.88	1.99	2.79	3.94
Make of indicator	Thompson.			
Spring, pounds per inch	307	186.8	20 30	10
Length of brake-arm, feet	4.8021			
Brake load, pounds	55.33			
Quality of steam at cut-off	See combined diagram.			
“ “ “ “ release	“ “ “			
Cut-off crank end, per cent. stroke	20.68	30.57	27.56	22.09
“ head “ “ “	26.38	36.82	31.89	31.27
Release crank “ “ “	95.84	98.90	95.80	99.92
“ head “ “ “	95.91	98.26	99.40	96.56
Compression crank, “ “	3.4	10.	13.5	8.3
“ head “ “	6.77	6.27	12.8	10.
Absolute pressure at point of cut-off, pounds	264.10	110.325	39.40	10.67
“ “ “ release, pounds	115.154	44.43	14.30	4.08
“ back pressure, pounds	125.169	44.83	13.38	2.47
I. H. P. head	.868	1.727	1.738	1.441
I. H. P. crank	.804	1.534	1.771	1.212
Total I. H. P.	1.672	3.261	3.509	2.653
Steam per I. H. P. at point cut-off, per diagrams	4.86	8.60	7.71	4.55
“ “ “ “ “ release, “ “	8.99	10.94	11.72	8.07
Distribution of work. Total H. P. units	15.07	29.39	31.63	23.91

* Water-rate of perfect engine taken as 2,545 + $(\lambda - q_2)\,e$, in which λ = total heat of entering steam, q_2 = heat of liquid of exhaust, e = thermodynamic efficiency. Receiver pressure, 1 = 108 ; 2 = 30.7 ; 3 = − 1.6. Reheater temperature, 1 = 645 ; 2 = 472 ; 3 = 254.6.

II.

SIBLEY COLLEGE, DEPARTMENT OF EXPERIMENTAL ENGINEERING.

DATA AND RESULTS. TRIPLE-EXPANSION ENGINE.

Made by N. S. Reeder, J. H. Mitchell. Date, May 12, 1896.

Kind of engine, quadruple expansion	
Duration of run . . . hours	3
Revolutions per minute	290
Temperature condensing water, cold . . . degrees Fahr.	68.95
" " warm . . . degrees Fahr.	83.33
" condensed steam	95.38
" engine room	96.2
" external air	64.9
Boiler pressure gauge . . . pounds	393.9
Barometer, 29.27 inches . . . pounds	14.36
Condenser, 21.36 inches high . . . pounds	10.48
Boiling temp., atmospheric pressure . . . degrees Fahr.	210.96
Total steam per hour, C, for engine . . . pounds	129.3
Total, condensing water per hour . . . pounds	9,195
Wt. condensing water per pound steam	71.1
Total I. H. P.	10.634
" D. H. P.	9.217
Mechanical efficiency	87.22
Moisture in steam . . . per cent.	.94
Steam per I. H. P. per hour, actual . . . pounds	12.15
" " I. H. P. " " corrected, cal . . . pounds	12.03
" " D. H. P. " " " " . . . pounds	13.89
*Water-rate of perfect engine	7.54
Thermodynamic efficiency	29.4
Ratio actual to theoretical water consumption	1.61
Heat supplied per hour B. T. U., by boiler	154,885
" discharged per hour B. T. U	140,446
" utilized per hour B. T. U	27,063
B. T. U. per I. H. P. per minute	242.7
Ratio of expansion from combined card	80.1

	H. P.	L. P.	L. P.	
Diameter of cylinder . . . inches	2.344	3.969	6.977	10.266
Length of stroke . . . inches	4.5	4.5	4.5	4.5
Diameter of piston-rod . . . inches	.5	.625	.875	1.125
Piston displacement crank end, cubic inches	18.565	55.403	171.794	371.606
" " head " " "	19.449	55.710	172.395	372.6
Volume of clearance, " " per cent	2.14	1.99	2.70	3.94
" " " crank " " "	1.88	1.99	2.79	3.94
Make of indicator		Thompson.		
Spring . . . pounds per inches	260.6	100	30	10
Length of brake-arm . . . feet		4.8021		
Brake load . . . pounds		55.046		
Quality of steam at cut-off	51.5	71.5	84	54.5
" " " " release	90.5	100	Super.	100
Steam-chest pressure gauge	. . . . . .	. . . . . .	. . . . . .	. . . . . .
Cut-off crank end, per cent. stroke	22.21	29.67	30.34	27.16
" head " " "	26.45	34.02	33.72	31.83
Release crank " " "	100	97.27	98.51	100
" head " " "	100	97.52	100	97.29
Compression crank " "	1.08	10.7	10.0	5.92
" head " "	0	4.64	7.58	8.50
Absolute pressure at point of cut-off . . . pounds	265.34	101.56	37.35	13.27
" " " release . . . pounds	120.37	55.45	18.98	6.72
" back pressure . . . pounds	120.37	47.06	17.04	5.08
I. H. P. head	1.366	1.625	1.240	1.444
I. H. P. crank	.786	1.452	1.481	1.240
Total I. H. P	2.152	3.077	2.721	2.684
Steam per I. H. P. at point cut-off, per diagram	5.10	7.50	7.65	6.12
" " " " release, "	9.85	11.35	12.69	10.07
Distribution of work. H. P. as 1	20.23	28.93	25.58	25.23

---

* Water-rate of perfect engine equals $2{,}545 \div (\lambda - q_2)\, e$, in which λ = total heat of entering steam, q_2 = heat of liquid of exhaust, e = thermodynamic efficiency. Receiver pressure, 1 = 95.20; 2 = 31.40; 3 = 1.55; receiver temperature, 1 = 333.40; 2 = 279.40; 3 = 216.80; reheater temperature, 1 = 582.20; 2 = 366.80; 3 = 200.00.

HEAT ANALYSIS.—MAY 12, 1896.

	1st Cylinder.	2d Cylinder.	3d Cylinder.	4th Cylinder.
Heat supplied	154,885	153,078	150,755	148.416
" utilized	5,477	7,831	6,925	6,830
" discharged	182,056	144,790	142,611	140,446
" wasted	17,352	457	1,219	1,139

Total heat supplied	187,677
" " utilized	27,063
" " discharged	140,446
" " wasted	20,167

Per cent. heat utilized	14,419
" " discharged	74,836
" " wasted	10,745

Heat gained in 1st reheater	21,022
" " 2d "	5,965
" " 3d "	5,805

Per cent. of heat supplied by boiler	82,528
" " " " 1st reheater	11,201
" " " " 2d "	3,178
" " " " 3d "	3,093

The Actual and Computed Results of operation of this engine, comparing the ideal case with the real engine performance as revealed by the various tests which have been up to its date made under more or less favorable conditions, are shown in the accompanying set of diagrams, Fig. 86. The curve *A* shows the computed efficiencies of the representative ideal case, as measured in pounds of feed-water per H. P. per hour, and, approximately, in thousands of B. T. U.; the Rankine cycle being assumed, and the feed-water being assumed, in the latter case, to include the jacket-water of the usual, jacketed engine. The figures range from about 6½ at 500 pounds boiler pressure, to 7 at 300 pounds, to 8 at 150 pounds, and to 9 at 100 pounds.

The actual performance, as shown on curve *B*, is irregular, varying somewhat with the action of the boiler and the effectiveness of the reheaters. With most effective boiler operation and reheating the very best work is accomplished, in the trials illustrated, between 300 and 400 pounds pressure. From the former figure up to 500, the figures for cost in heat and in fuel, as above, range between 9½ and 10, falling to 12½ at 150 pounds —a pressure, however, for which the engine is not well proportioned. As the reheating becomes less effective the efficiency falls off, until, with reheaters out of use entirely, the curve *C* is obtained, and the smooth curvature of the line shows the true law of gain with increasing pressures. The figures measuring economy here range from 13½ at 500 down to 14 at 400, to 15 at 325, to 16 at 250, and to 17½ at 200 pounds pressure.

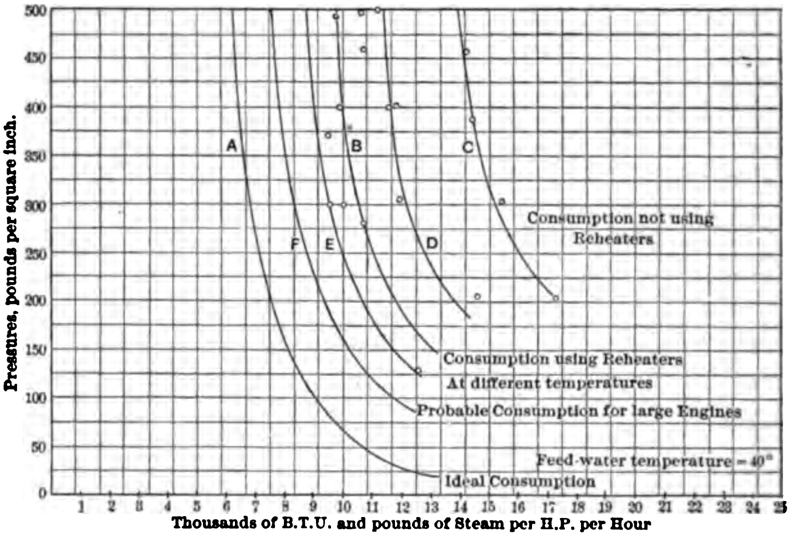

FIG. 86. — EFFICIENCY CURVES, IDEAL AND ACTUAL.

American Bank Note Co., N.Y.

In that portion of the scale in *C*, for which the engine is best proportioned, the consumption of steam in pounds, or of heat in thousands of heat-units, is measured, with a fair degree of accuracy, by the expression

$$w = \frac{a}{\log p_1},$$

the value of *a* being taken at 30. For the case in which reheating was more or less effective, line *B*, the value of *a* becomes more nearly 25, rising at times, with inefficient action of the reheaters, to 30; while, on the line *A*, the coefficient becomes $a = 18$. Throwing out the reheaters, the efficiency becomes about one-half that of the ideal case at the higher pressures, sentative of the limit of practical advance at present, with saturated steam and such provisions for minimizing wastes as are now customarily employed. Assuming this to be the fact, we find that we cannot expect to reduce expenditure to a lower figure than about 8 pounds of feed-water per I. H. P. per hour, about 8,000 B. T. U., the feed-water being supplied at such temperatures as will make the net heat-supply 1,000 B. T. U. per pound of steam made.

Effective superheating, annulling initial condensation, judging from experience, should improve this ultimate figure for saturated steam by, as a maximum, not above one-eighth; and 7,000 B. T. U., or 7 pounds of steam, may, on this basis, be taken as the limit of probable advance. The temperature of steam of this pressure is about 550 degrees Fahr., and superheating, it is thought, cannot be carried far beyond that point in the existing steam engine.

Change of cycle is the next most promising direction of gain, apparently. By the adoption of the Carnot cycle it is possible to increase the efficiency of the engine about twenty per cent. above that of the common approximate Rankine form of cycle. This may not be at all impossible, and a number of methods of attaining this result may yet be found. Assuming it to be found practicable, and the gain due this change secured, the ideal line for the Rankine cycle, line *A*, on the diagram, would be reached and the cost in pounds of feed-water and in thousands of B. T. U. would be

$$w = 18 / \log p,$$

ranging from the equivalent of 6 pounds saturated steam at 1,000 pounds pressure, down to 9 pounds at 100 pounds, from 6,000 to 9,000 B. T. U.; efficiency rising to 30 per cent. at the lower and 40 per cent. at the upper limit of pressure.

The above are the deductions coming of this study of the outlook for improvement by use of high-pressure steam at the limits which seem likely to be approximated in the near future, and on the assumption that our engines will be no better adapted to such work than are the best engines of to-day to their narrower range of thermodynamic operation. Beyond, there still lies at least one direction of further gain by reduction of wastes, and one of advance by increase of the proportion of heat transformed thermodynamically. The former resource is the now familiar scheme of finding a non-conducting cylinder wall; the other is the employment of steam-gas, and probably in some such manner as was attempted by Sir William Siemens. The first of these expedients will convert the engine into a purely thermodynamic machine; the latter will raise its thermodynamic efficiency to the Carnot limit, and to a numerical value determined, finally, by the maximum practically available temperature. Should these changes prove ultimately practicable, this generation need not anticipate witnessing the displacement of the steam engine by any other form of heat motor. It will combine, better than can any other now known, the maximum of combined thermal and dynamic efficiency.

SUMMARIZING THE CASE, we may state the following as our conclusions from what has preceded relating to the "promise and potency of high-pressure steam" within the limits here examined:

(1) With equally excellent design, construction, and management, we may expect the efficiency of the steam engine, with increasing pressures, to increase nearly as the logarithm of the boiler pressure.

(2) We may hope to secure, at the highest pressures yet proposed, substantially as close an approximation to the efficiency of the ideal engine as at those pressures which now give our best records, probably seventy per cent. of the efficiency of the cycle adopted, considered as an ideal, thermodynamic cycle.

(3) That gain in economy, by increasing pressures simply, must be expected to be slow and to steadily decrease in rate of gain as pressures rise, making the practicable, commercial limit a pressure comparatively low.

(4) That, assuming 1,000 pounds pressure safely and readily attainable, we cannot expect to reduce the demand for heat and steam below 6,000 B. T. U. per I. H. P. per hour, and about 6 pounds of steam; the probable figures being at least 20 per cent. higher, even with feed heated as assumed.

(5) At 500 pounds pressure, a steam consumption of 10 pounds and less has been attained under circumstances indicating that on a large scale the steam engine should, under similar thermal conditions, reduce this figure very considerably.

(6) The direction in which to seek for gain are the reduction of internal wastes and the production of a superheated-steam engine.

DISCUSSION.

Mr. Joseph E. Johnson, Jr.—I would like to know how those tests with a varying clearance were made—if they were made simply by recessing at the head; then the surface did not increase in proportion to the clearance. It seems to me that in most engines built to-day the increase of surface with great clearance is more important than the increase of the clearance itself. I would like to ask also if the water from the re-heaters in the quadruple-expansion engine was reëvaporated by boiler steam, and, if so, whether the steam so condensed was considered in the economy of the engine.

Mr. Francis H. Boyer.—In reference to the question of glass gauges for such high pressures, I have had considerable experience with gauges of that character and even have had occasion to use glass gauges to resist from 400 to 600 pounds per square inch. The gauges that we use are long. It is not a very infrequent thing to run for days with pressures of 200 to 250 pounds. The glass tubes are long, the opening through them not over one-eighth of an inch in diameter and with about three-eighths of an inch thickness of glass; encasing in iron or brass tubes with a slot on the side.

Mr. John E. Sweet.—Was it steam you were using?

Mr. Boyer.—No; it was ammonia.

Mr. Sweet.—Doesn't that make a difference?

Mr. Boyer.—I should suppose that it would not. These tubes are annealed ten or twelve times. I have seen some very dangerous results caused by breaking glasses. I had one of my men cut with a terrible gash by flying glass from gauges of a steam boiler. But I have glass tubes now that I have had in use under such conditions for four years. When they do break, they go in thousands of pieces.

Professor Thurston.—The clearance experiments were made by fitting in the place of the back head of the engine another special form of head which was, in effect, a chamber bored out and fitted with a piston, which piston could be set so as to close the clearance space. That piston was set up against the piston of the engine, allowing only just clearance enough to be safe. An engine trial was thus conducted with as little clearance as we could get. Then the adjustable piston was withdrawn to a certain extent, until the next measure of clearance desired was obtained between the piston and the head. Thus the adjustable piston was withdrawn gradually, until, finally, the space enclosed between it and the piston of the engine, including port-spaces, became above thirty per cent. of the volume displaced by the piston.

I think it is perfectly true, as Mr. Johnson said, that the areas of surface acting are quite as important—more so, in some adjustments of the engine—as the actual volume of steam filling the clearance spaces. This investigation indicates what would be the effect of building an engine with enlarged clearance. We could not carry our experiments down to smaller clearances than here reported because our engine is built with comparatively large clearance. But the fact of getting a very smooth curve allowed us to carry the line down to the zero point.

In regard to the measurement of the steam from the heaters—we have not been able to do that satisfactorily, and little is to be said about that yet. We hope, in time, to be able to make such an investigation as will enable us to say where every thermal unit of heat goes from the time that it leaves the fuel-bed until it finds its way out to the stack on the one side or through the engine on the other.

These data must be taken as the outcome of first and tentative efforts to secure what can only be at present a rough approximation to the possible efficiencies of high-pressure steam; and what they may be can be realized from the fact that, with the largest consumption of steam that we have been able to observe, even without re-heaters in use, the steam consumption, at 500 pounds pressure in this case, is only about 13 pounds per horse-power per hour. If we magnify the scale of this engine, which is only of 20 horse-power, up to that of the Milwaukee engine, to 500 or 700 horse-power, as we can readily see, the wastes are likely to be reduced in enormous proportion, and from that fact we may get some idea, at any rate, of the probabilities of the gain to be anticipated by the use of such high pressures. I should judge, from what we have learned so far, that we ought to be able to discount the action of the Milwaukee engine and of Mr. Leavitt's later engine, now just reported on, from twenty to twenty-five per cent. In other words, it would probably come down to within twenty-five per cent. of the performance, as indicated by computation, of the ideal case.

DISCUSSION.

Mr. Joseph E. Johnson, Jr.—I would like to know how those tests with a varying clearance were made—if they were made simply by recessing at the head; then the surface did not increase in proportion to the clearance. It seems to me that in most engines built to-day the increase of surface with great clearance is more important than the increase of the clearance itself. I would like to ask also if the water from the re-heaters in the quadruple-expansion engine was reëvaporated by boiler steam, and, if so, whether the steam so condensed was considered in the economy of the engine.

Mr. Francis H. Boyer.—In reference to the question of glass gauges for such high pressures, I have had considerable experience with gauges of that character and even have had occasion to use glass gauges to resist from 400 to 600 pounds per square inch. The gauges that we use are long. It is not a very infrequent thing to run for days with pressures of 200 to 250 pounds. The glass tubes are long, the opening through them not over one-eighth of an inch in diameter and with about three-eighths of an inch thickness of glass; encasing in iron or brass tubes with a slot on the side.

Mr. John E. Sweet.—Was it steam you were using?

Mr. Boyer.—No; it was ammonia.

Mr. Sweet.—Doesn't that make a difference?

Mr. Boyer.—I should suppose that it would not. These tubes are annealed ten or twelve times. I have seen some very dangerous results caused by breaking glasses. I had one of my men cut with a terrible gash by flying glass from gauges of a steam boiler. But I have glass tubes now that I have had in use under such conditions for four years. When they do break, they go in thousands of pieces.

Professor Thurston.—The clearance experiments were made by fitting in the place of the back head of the engine another special form of head which was, in effect, a chamber bored out and fitted with a piston, which piston could be set so as to close the clearance space. That piston was set up against the piston of the engine, allowing only just clearance enough to be safe. An engine trial was thus conducted with as little clearance as we could get. Then the adjustable piston was withdrawn to a certain extent, until the next measure of clearance desired was ob-

A concern with records covering many years may proceed confidently, giving no anxious thought to the outcome, provided the conditions do not change. A manufacturer of machine tools was recently questioned as to his method of ascertaining cost, and as to his knowledge of the correctness of his method. By way of reply he pointed out from his office door, a row of houses to which he is adding a number each year. In case of such results, methods may be ignored. There are in these close times concerns of which it is true that twenty-five years ago a difference of ten per cent. in the result of a year's business would have been a profit of twenty-five instead of thirty-five per cent., while now a difference of ten per cent. would probably mean a profit of five or a loss of five.

Much has been written about the cost of manufactured articles. The net cost, as usually ascertained, is of interest only as being one of the elements necessary for fixing a selling price or of placing an inventory value on the article produced. Inquiry of machine manufacturers as to their method of ascertaining cost or selling price, is often answered by, "Well, on a basis of, say, $300,000 sales per year, etc." Now, sales have nothing to do with the problem, further than that the product of a factory must be converted into money as a more convenient medium of exchange. A manufacturer of cotton cloth producing 1,000 yards per day, paying for labor with 400 yards, for material and supplies 300 yards, for rent, insurance, taxes, and all other expenses 200 yards, would have 100 yards remaining as profit. With a product of 1,000 yards per day there is a profit. Had the product been 900 yards there would have been no profit, and with a product of 800 yards there would be a loss, so that it is a question of product and not of sales. The product must be sold.

Other manufacturers answer: "We find that adding six per cent. to the value of material and merchandise used, and charging forty cents per hour for all day labor, will cover general expense and leave us a fair margin." This is simple and satisfactory until conditions change—the number of producer hours per year, for instance, or the introduction of a new machine which will do the work of two old ones, and displace them, and dispense with one man; then the difference between the hourly sum paid this one workman and the forty cents formerly charged is not available for meeting general expense. A careful study of this point will show that unless readjustments are made as labor-saving tools and methods are adopted, there may be a deficiency due to an hitherto unsuspected cause.

It is the purpose here to show what the volume of product must be, and what value must be placed upon it unsold, or what selling price when sold, in order to make both ends meet and to overlap for a given organization and general expense.

First, an annual estimate or prospectus, Table I., for the succeeding year, is prepared, based upon experience and judgment. In this case the capital invested in the business is assumed to be $100,000, and the annual pay-roll to be $50,000, equally divided between producers and non-producers; and, to avoid the discussion now being carried on editorially and by the correspondents of trade papers as to who are producers and who non-producers, it must be clearly understood that all those whose time can be directly ascertained and charged against some specific order or article produced for sale are classed as producers, and all others as non-producers, and in case of doubt safety lies in erring on the side of classing an individual as a non-producer rather than a producer. The column, Estimated Expenditure, Table I., requires no explanation. It shows in this assumed case that for the conduct of the business for the succeeding year $156,000 must be secured. The question then arises, from what sources is this sum to be derived?

In the column, estimated receipts, adjoining, (*a*) Fixed income $600, this being the sum derived from rental of a portion of the factory buildings, interest on bonds or returns from investments.

(*b*) Interest $400 is the estimated sum to be derived from notes given for deferred payments, overdue accounts, etc.

(*c*) It is assumed that in case of a machine-shop with tools varying greatly in size, value, floor space occupied, and power required, that there should be a separation of the charge for the workman and for the tool. The hourly charge for a man at twenty-five cents working on a $5,000 horizontal boring-mill should not be the same as for the same priced man working on a $300 lathe. Separating tool time from workman's time, it is estimated that the tools would yield a plant charge of $5,000.

(*d*) Material and merchandise are estimated at $75,000. This item is the same as in the column of estimated expenditures, to which is added, say, twenty per cent. (*e*), which yields $15,000.

(*f*) Producers' wages is the estimated amount to be derived by charging producers' actual time at their actual rate against the product. The sum of all these estimated receipts is $121,000, while the sum of the estimated expenditures is $156,000, which would show a deficit of $35,000 on the year's business. Now from what source is it possible to secure this $35,000? Clearly from a percentage added to producer's wages. In this case producers' wages are $25,000, and in order to derive therefrom the $35,000, to make good the deficit, 140 per cent. must be added. We have now a sure method of determining the necessary selling price when the actual cost of material and merchandise, the number of hours and rate per hour, and the tool hours and rate per hour are known; thus, material and merchandise plus 20 per cent., tool hours at their established rate, and labor plus 140 per cent. equal the selling price under the conditions assumed in the annual estimate. But, unfortunately, the business manager cannot sit at his desk in December and predict that his losses for the succeeding year will be $500, and his legal expenses $300 and contingent expenses $1,000, and that he will employ and get the benefit of the product of $25,000 expended in producers' wages. It is this difficulty that the method now presented meets and overcomes by the use of the tabulated monthly statement, Table II. This is shown in monthly form, but so little labor is involved that the manager may keep in closer touch with his business by using a weekly form. This sheet provides for bringing the actual receipts and expenditures together with the estimated, item by item and month by month, so that a glance will show if any item of expenditure is actually overrunning the estimated, and if any item of receipts is underrunning the estimated, and show it in time for correction. It will also show for any month if the total actual receipts or expenditures vary from the estimated, and which way and how much. This is desirable, for one item may exceed the estimated and be compensated by another, so that the total shall be unaffected. This table is prepared and used as follows: The items—Estimated Receipts and Expenditures, Sheet I.—are divided by twelve, and one-twelfth of each item entered in the column, Month Ending January 31st, and on its properly des-

ignated horizontal line; under February two-twelfths, March three-twelfths, etc., the amounts being cumulative until at the end of the year or under December they amount to the sum shown in the annual estimate. These spaces may be all filled out as shown for the last half of the year—Table II.

It will be noticed that in the two horizontal lines of totals (receipts and expenditures), Table II., the estimated amounts are always equal. They must be if both ends are to meet. At the end of the first month of the new year actual figures are available and are filled in the proper spaces, and the items and totals for the year, as far as it has gone, are directly comparable with the corresponding estimates; and right here the manager has a chance to earn his salary by managing. This method gives him eleven more chances and eleven months' time for remedies.

Answering the proper objection, that selling prices are not made by ascertaining the value of material and labor and adding a percentage, but by competition, it is nevertheless true that unless the value of material and labor will admit of the addition of the percentages proved to be necessary by the annual estimate, without making the selling price so high as to keep the goods out of the market, then the end of the year will show a deficit. When it is found that a selling price arrived at by this method is too high, the obvious remedy is to reduce the amount (not necessarily the rate) paid for labor or material until they will bear the addition of the necessary percentage without throwing the article out of the market. It is clear that, other things being equal, twice the producing force will require but one-half of the percentage to be added. It is also clear that a reduction in the total expenditure, or an increase in any items of receipts, will reduce the percentage necessary to be added. This gives the manager a definite method of making readjustments, as he obtains results of actual business as the year advances. In this method one assumption is necessary, but it is a fair one, viz., that the employment of a certain number of dollars' worth of productive labor produces a corresponding value of product plus the percentage shown to be necessary by the estimate. The manager must secure this result. In other words, every dollar paid to producers plus the required percentage must be charged to the product (this together with the plant charge and material plus its percentage), must be the real value of the product, sold or unsold, and all things must be adjusted to this end.

TABLE I.

ANNUAL ESTIMATE.

ASSUME CAPITAL $100,000.

Annual Pay Roll { Producers, $25,000.
Non-Producers, $25,000.

ESTIMATED RECEIPTS.		ESTIMATED EXPENDITURES.	
a—Fixed Income	$600	Profit	$10,000
b—Interest	400	Losses	500
c—Plant Charge	5,000	Renewals	2,000
d—Material and Mdse	75,000	Depreciation	2,000
e—20% to Material and Mdse	15,000	Producers' Wages	25,000
f—Producers' Wages	25,000	Non-Producers' Wages	25,000
		Material and Mdse	75,000
	121,000	General Expense	10,000
g—140% to Producers'		Stable and Hauling	500
Wages to Balance	85,000	Printing and Stationery	300
		Freight and Express	500
		Advertising	1,000
		Postage	200
		Insurance	1,000
		Commissions	200
		Interest and Discounts	800
		Charity	200
		Legal	300
		Fuel	500
		Contingent	1,000
	$156,000		$156,000

DISCUSSION.

Mr. W. S. Rogers.—There is a great deal of important matter in these few pages of deep concern to the manager's private office. Everything in these columns is exactly what the manager and directors desire to know, but the article either does not go quite far enough or has gone too far. It does not touch the shop or manufacturing department. The method of reaching the deductions shown in the monthly balances has not been told, and consequently the engineer cutting down costs learns nothing of the details leading to this perfect array of costs in general. It is a nice thing for the manager to call the superintendent in on the carpet and inform him that, "Last month we ran behind our estimates." He is a whipped dog instantly. He knows and feels, because it is now too late to even wonder where loss leaked away, and he goes out and gets even on the foremen (laughter), and the foremen get even again on the men (laughter), and all accounts are squared for the time being, but nobody has found the many little leaks which helped make the loss. The ideal system of factory costs is one by which the superintendent can call his foreman's attention to the little leaks on the very day when they occur, and where he can know at six o'clock at night whether he earned a dollar for the company or lost one and the exact spot where it was lost, too, that he may regain it the next day. The mechanical engineer and superintendent to succeed in the present day must know as much concerning finance as he does about gearing and shop appliances or he is a failure. Some may think the ideal just mentioned is but a dream, but with us it is cold fact. I do not care whether our company lost a million dollars.or a cent last year, but I want to know and do know whether I am behind or ahead of previous records of machine costs every day, and our president can have this information from my office at any hour he chooses to ask for it. The problem is easy, and is based on the rate per hour for actual producing labor employed in building each line of goods. If we are building a lot of six machines, we know that the previous lot was completed in 4,800 hours total labor at a rate of 17$\frac{1}{10}$ cents per hour. By new special tools we have shortened this time, and a limit is fixed for this lot of 4,000 hours on a basis of 16⅛ cents per hour. Every day this time is averaged, and should my cost clerk inform me that the costs per hour had varied from 16½ cents to 16⅝ cents per hour in two days the foreman is shown his leak at once and steps are taken to recover the lost values. The cost accounting plan which will discover the many little wasted minutes in producing time at the moment of occurrence is the true ideal, and the results given in this paper show it to be in the right direction. But we want more of the details by which they were gained.

There is one item in this paper to which I desire to call your attention, as it illustrates how we always do things in Cincinnati. I would also like to ask you gentlemen who are now busy making up your estimate sheets for the coming year, did you ever give one single thought to the "charity column"? (Laughter and applause.)

DCCXII.*

FRICTION HORSE-POWER IN FACTORIES.

BY C. H. BENJAMIN, CLEVELAND, O.

DURING the winter of 1895–96 a series of experiments were made under the direction of the writer by Messrs. McAllister and Morley, of the Case School of Applied Science, to determine the ratio of the power required to drive shafting and belts in various factories in this city to the total power consumed.

In the course of these investigations visits were made to sixteen different establishments, comprising rolling and stamping mills, bridge works, general machine works, and screw factories.

The general routine of the investigation in each shop was about as follows:

Indicator cards were taken from the engine during the day, at intervals of about one hour, while the factory was in full operation. During the noon hour or after working hours at night cards were taken from the same engine when it was driving line and counter shafts only, no machines being in operation.

Averages of these two sets of cards were assumed to show respectively the total horse-power and the friction horse-power in that establishment.

During the day the observers measured the lengths, diameters, and speeds of rotation of the line shafts, estimated the number and lengths of bearings, and noted the method of oiling. They also counted the belts running from line shafts and estimated their widths and the average diameter of pulleys.

The number of counter shafts was noted and the number and character of machines in operation.

As far as possible an estimate was made of the actual number of men at work with machines during the day.

---

* Presented at the New York meeting (December, 1896) of the American Society of Mechanical Engineers, and forming part of Volume XVIII. of the *Transactions*.

These are the data which seemed to the writer most likely to be useful in determining the power consumed under various conditions, and while a great degree of accuracy in all the estimates was not practicable, the average results will be reasonably close to the truth.

The tabular form is best adapted to comparisons of this nature, and the following tables are largely self-explanatory.

TABLE I.

DATA.

No.	Nature of Work.	1 Total Length Line Shaft Feet.	2 Diameter of Line Shafts.	3 Revolutions per Minute.	4 Number of Bearings.	5 Number of Belts.	6 Average Width of Belts.	7 Number of Counters.	8 Number of Machines.	9 Number of Men.
1	Wire Drawing and Polishing.	1130	2½ 2¾ 4 6	170	115	89	4	69	....	...
2	Steel Stamping and Polishing............	580	3 3½	200	68	28	6	27	18	78
3	Boiler and Machine Work	530	2½ 3	150	46	53	5½	47	43	152
4	Bridge Machinery.....	1460	2½ 3 4	110	142	92	4½	79	69	80
5	Heavy Machine Work.	1120	3	190	110	141	4	96	68	300
6	Heavy Machine Work.	1065	2 3 4	180 150 150	114	192	4	152	123	225
7	Light Machine Work..	748	1½ 1¾ 2 3	135 135 135 150	101	217	3	133	250	200
8	Manufacture of Small Tools..............	500	2 3	114	58	335	3	314	313	226
9	Manufacture of Small Tools......	990	2½ 1¾	175 136	102	217	3	202	258	100
10	Sewing Machines and Bicycles	2490	2 6	150	274	521	3	403	454	400
11	Sewing Machines......	1472	2 3 4	160 160 125	184	484	3	435	179	350
12	Screw Machines and Screws.	1800	2 2¼ 2½ 3	180	180	486	3	392	428	320
13	Steel Wood-Screws...	674	1⅛ 2 3	175 160 175	96	131	4	89	392	140
14	Manufacture of Steel Nails...............	988	2½	200	74	187	3	175	184	58
15	Planing Mill..........	165	3	267	19	45	6	40	53	8
16	Light Machine Work..	275	2	175	37	48	4	27	30	....

TABLE II.

	1	2	3	4	
Number.	Total Horse-Power.	Horse-Power to Drive Machines.	Horse-Power to Drive Shafting.	Per Cent. to Drive Shafting.	Running at What Capacity.
1	400	243	157	39.2	One-half.
2	74	17	57	77	One-third.
3	38.6	13.3	25.3	65.6	Two-thirds.
4	59.2	11.3	47.9	80.7	Nearly full.
5	112	48	64	57	Full.
6	168	77	91	54.2	Full.
Average, heavy machine work	......	......	......	62.3	
7	40.4	19.7	20.7	51.2	Full.
8	74.3	34.3	40	53.8	Full.
9	47.2	22.7	24.5	51.8	Full.
10	190	82	108	56.9	Full.
11	107	32.5	74 5	69.7	Full.
12	241	127	114	47.3	Full.
Average, light machine work	....	......	......	55.1	
13	117	100	17	14.5	One-fourth.
14	91.6	45.9	45.7	49.9	Full.
15	39.2	10.6	28.6	73	Full.
16	8.28	4.26	4.02	48.6	One-half.

TABLE III.

FRICTION HORSE-POWER.

No.	1 H. P. per 100 ft. of shafting.	2 H. P. per 100 lbs. of shafting.	3 H. P. per 100 sq. ft. of shafting per minute.	4 H. P. per Bearing.	5 H. P. per Counter.	6 H. P. per Belt.	7 H. P. per 100 sq. ft of Belting per minute.
1........	14	.580	.10	1.37	2.28	1.76	.50
2........	9.84	.352	.059	.84	2.11	2.40	.33
Average.	11.92	.466	.08	1.10	2.19	2.08	.415
3........	4.77	.205	.04	.550	.538	.477	.10
4........	3.28	.137	.04	.837	.606	.521	.20
5........	5.70	.233	.038	.581	.665	.458	.10
6........	8.55	.306	.06	.799	.600	.475	.15
Average.	5.57	.22	.044	.567	.602	.481	.14
7........	2.75	.276	.034	.204	.155	.095	.04
8........	8.	.400	.09	.689	.127	.119	.06
9........	2.49	.233	.03	.240	.121	.113	.04
10........	4.36	.430	.05	.397	.269	.208	.09
11........	5.08	.134	.034	.406	.172	.154	.05
12........	6.33	.381	.05	.633	.291	.235	.09
Average.	4.83	.309	.048	.428	.189	.154	.062
13........	2.53	.169	.02	.178	.191	.130	.04
14........	4.62	.278	.035	.615	.260	.244	.07
15........	17.34	.729	.08	1.52	.715	.636	.08
16........	1.46	.138	.015	.109	.749	.084	.02

TABLE IV.

USEFUL HORSE-POWER.

No.	1	2
	Useful H. P. per machine.	Useful H. P. per man.
3	.310	.877
4	.164	.142
5	.707	.160
6	.627	.342
Average	.452	.380
7	.790	.090
8	.109	.152
9	.881	.227
10	.180	.204
11	.181	.093
12	.296	.396
Average	.406	.195
13	.256	.717
14	.251	.792
15	.200	1.326
16	.142	

EXPLANATIONS.

Table I. gives simply the data on which were based the calculations with regard to each factory. In all the tables the establishments are arranged according to the character of the work done in each.

Table II. shows how the horse-power was divided between the machinery and the shafting and belts. The figures in column 3 include the power required to overcome the friction of the engine itself and that of all the shafting and counters, as in most cases it was impracticable to determine these separately.

If a deduction of 10 be made from the percentages in column 4 they would then show approximately the power required to drive shafting and counters alone.

The percentage of power lost in overcoming friction depends more upon the arrangement of the shafting and machinery than upon the particular character of the work done, as may readily be seen from column 4. For instance, in the case of Works No. 4 there are two one-story buildings, covering considerable territory and containing machinery distributed at wide intervals. The power is transmitted from one shop to the other by a long shaft, and there are numerous transverse shafts driven by bevel gears.

This would seem to be one of those cases where electrical transmission would be a good investment.

A somewhat similar condition of things exists in Works No. 3. The record of the shafting at Works No. 13 is remarkable, especially when it is noted that the works were running at only one-quarter their capacity.

As the machinery is of the automatic type, very compactly arranged, the conditions are about the same as in several other shops visited; but an inspection of the shafting shows that great care has been exercised in its construction and operation. It is in perfect alignment, runs in cast iron boxes without babbitt metal, and supported by unusually rigid hangers, while it is oiled by hand instead of by wick-oilers.

That these conditions do not always obtain is shown by the remark made to the writer by the superintendent of one of the establishments visited, who said that he wished the test could be repeated, as after the first visit he had examined his line shafting and found that one length was about three inches out of line.

In Table III. the friction horse-power alone is used, and is divided in different ways in the endeavor to determine on what factors it most depends.

Columns 1 and 2 show a wide variation in different factories, since the work of friction is dependent on speed as much as on pressure.

Column 3 is more uniform. In this case the friction horse-power was divided by the number of hundreds of square feet of shafting surface passing a given line in a minute, in much the same manner as the horse-power of belting is often calculated. With one or two exceptions the figures in this column are nearly the same throughout, the general average for heavy and light machinery being about .046 horse-power per hundred square feet.

The horse-power per bearing as shown in column 4 is nearly as great for light machinery as for heavy, probably on account of the greater speed of the former.

In columns 5 and 6 the friction horse-power per counter shaft

TABLE IV.

USEFUL HORSE-POWER.

No.	1	2
	Useful H. P. per machine.	Useful H. P. per man.
3	.310	.877
4	.164	.142
5	.707	.160
6	.627	.342
Average	.452	.380
7	.790	.090
8	.109	.152
9	.881	.227
10	.180	.204
11	.181	.093
12	.296	.396
Average	.406	.195
13	.256	.717
14	.251	.792
15	.200	1.326
16	.142	

EXPLANATIONS.

Table I. gives simply the data on which were based the calculations with regard to each factory. In all the tables the establishments are arranged according to the character of the work done in each.

Table II. shows how the horse-power was divided between the machinery and the shafting and belts. The figures in column 3 include the power required to overcome the friction of the engine itself and that of all the shafting and counters, as in most cases it was impracticable to determine these separately.

If a deduction of 10 be made from the percentages in column 4 they would then show approximately the power required to drive shafting and counters alone.

The percentage of power lost in overcoming friction depends more upon the arrangement of the shafting and machinery than upon the particular character of the work done, as may readily be seen from column 4. For instance, in the case of Works No. 4 there are two one-story buildings, covering considerable territory and containing machinery distributed at wide intervals. The power is transmitted from one shop to the other by a long shaft, and there are numerous transverse shafts driven by bevel gears.

This would seem to be one of those cases where electrical transmission would be a good investment.

A somewhat similar condition of things exists in Works No. 3. The record of the shafting at Works No. 13 is remarkable, especially when it is noted that the works were running at only one-quarter their capacity.

As the machinery is of the automatic type, very compactly arranged, the conditions are about the same as in several other shops visited; but an inspection of the shafting shows that great care has been exercised in its construction and operation. It is in perfect alignment, runs in cast iron boxes without babbitt metal, and supported by unusually rigid hangers, while it is oiled by hand instead of by wick-oilers.

That these conditions do not always obtain is shown by the remark made to the writer by the superintendent of one of the establishments visited, who said that he wished the test could be repeated, as after the first visit he had examined his line shafting and found that one length was about three inches out of line.

In Table III. the friction horse-power alone is used, and is divided in different ways in the endeavor to determine on what factors it most depends.

Columns 1 and 2 show a wide variation in different factories, since the work of friction is dependent on speed as much as on pressure.

Column 3 is more uniform. In this case the friction horse-power was divided by the number of hundreds of square feet of shafting surface passing a given line in a minute, in much the same manner as the horse-power of belting is often calculated. With one or two exceptions the figures in this column are nearly the same throughout, the general average for heavy and light machinery being about .046 horse-power per hundred square feet.

The horse-power per bearing as shown in column 4 is nearly as great for light machinery as for heavy, probably on account of the greater speed of the former.

In columns 5 and 6 the friction horse-power per counter shaft and per belt runs quite uniformly in the two classes of heavy and of light machinery, being about three times as much in the former case as in the latter. It seems to the writer that either of these would offer a convenient and reasonably accurate method of estimating the horse-power required to run shafting and belts in ordinary situations.

The results in column 7 are more or less approximate, since the average size of the pulleys was rather roughly estimated; but they are as uniform as could be expected. The heavier duty per square foot of belt in the four heavy machinery establishments is partly due to the fact that the belts were thicker and required more power in bending.

The results in Table IV. were worked out from the useful horse-power or that required to drive the machines alone, more as a matter of curiosity than with any expectation that they would be useful.

The figures in column 1 are not nearly as uniform as those for shafting in Table III., since machines vary much more widely in construction than do line and counter shafts. In fact, it is not possible to give any average or state any rule which would be of value in special cases. The same may be said of the results in column 2, which show that any rule for estimating horse-power from the number of men employed would have a very narrow application.

CONCLUSIONS.

One would naturally inquire, after looking at the averages in Table II., if it is necessary that from 55 to 65 per cent. of the power generated by the engine should be absorbed before the machines are reached.

The isolated case of Works No. 13 would seem to answer this question.

One explanation of the large loss by friction in many shops is the fact that economizing in either quantity or quality of oil has at once a favorable effect on the bills, while the corresponding increase in coal and water consumption may be unnoticed or attributed to other causes. This is a case of saving at the spigot and wasting at the bung.

Where the loss is due to a necessarily extended and complicated system of shafting, it would be wise to determine if electrical transmission of the power would not be cheaper in the end.

No doubt it is true that to-day the question of time is more important than that of power, and that, in the endeavor to get the most product per machine and per man, the minor subject of coal and water consumption has been overlooked. This is, however, the age of small economies—economies which would have been laughed at a generation ago, and no manufacturer can afford to neglect the losses shown in these experiments.

It seems to the writer that in ordinary machinery establishments an observance of the following rules might effect a saving that would be noticeable in the annual balance.

1. Use pulleys of large diameter on counters and narrow fast-running belts.
2. Use nothing but the best oil and plenty of it, catching all drip, and either purifying it or using it for some other purpose.
3. Have all the shafting and counters oiled regularly, and do not depend too much on automatic oiling.
4. Inspect line shafts from time to time, and see that they are in line and can be turned easily.

Many line-shaft boxes bind at the sides when screwed down, sometimes increasing the turning moment a hundred per cent.

DISCUSSION.

Mr. Samuel Webber.—I have been much interested in the results of Mr. Benjamin's experiments, and agree most fully with him in his final conclusions, which are, after all, only the rules established and carried out in all the large cotton mills in New England, where the subject of transmission of power has long been a study.

The "Exceptional Case," No. 13, of which he speaks, agrees almost exactly with the results obtained by me in a large number of those mills between 1870 and 1880, and which I spoke of at the Boston meeting of the Society in 1885.*

The fact is, our millwrights still adhere too pertinaciously to old and obsolete rules, and the old formula, H. P. = $\left(\frac{D^3 \times RPM}{125}\right)$, is yet published; while the experiments of Mr. Francis, published many years since, show that H. P. = $\left(\frac{D^3 \times RPM}{100}\right)$ is ample for prime movers, subject to the strain of gears or cross-

---

* *Transactions A. S. M. E.*, Vol. VII., p. 138, No. 191.

belts, and H. P. = $\left(\frac{D^3 \times RPM}{62.5}\right)$ is sufficient for mere transmission of power, if no side strains are involved. Further, with cold-rolled shafting even these denominators may be reduced one-third.

I think the results of the tables are very strong arguments in favor of electric transmission where the machines are isolated or widely distributed over a large area.

I am a little at a loss to see how "Useful Horse-Power Machine" No. 8, in Table IV., should be so much less than in per Nos. 7 and 9, apparently on similar styles of work.

An accurate measure by dynamometer of the power required by each machine, is a useful check on any tables made up from the deductions from indicator cards.

I began my own experiments on increasing speeds and reducing diameters of shafts in 1853, and since then others have carried them so far that they have been obliged to put fly-wheels on their shafts to equalize the motion to the machines, and there is little line shafting put up now less than $1\frac{3}{4}$ or $1\frac{7}{8}$ in diameter.

Mr. J. J. Flather.—The paper on this subject by Professor Benjamin is timely, and contains much valuable information regarding the loss of power due to shafting and belts. While the steam-engine indicator may not be entirely reliable in those cases where small differences are measured, as, for instance, in No. 16 of the table, and possibly No. 13, yet, as the author states, the average results may be considered reasonably close to the truth.

The values of the ratio of friction horse-power to total power (Table II.) agree fairly well with those observed by the writer in numerous cases, but are, on the whole, somewhat higher; however, as will be shown presently, the values given by Professor Benjamin are none too high when the average time of operation of the machinery is taken into account. For average light machine work, with shafting in fair condition, I assume that from 30 to 40 per cent. of the total power is expended in overcoming the friction of shafting and belting; on the other hand, for heavy machinery this loss will probably average from 40 to 50 per cent.

In these cases it is assumed that the shafting is in fair alignment and properly lubricated, having its hangers sufficiently close to each other to prevent undue deflection under working conditions; it is also assumed that the belting is not unnecessarily tight. Departures from these conditions will increase or decrease the assumed friction loss, depending upon the degree of perfection attained in the erection and maintenance of the shafting.

Other features which will affect this loss are the extent of territory covered by the machinery and the nearness to the engine or motive power. In those cases where the power is transmitted a considerable distance by means of belts and shafting, the loss in friction is very great. In one case, that of the railway of Northern France, the loss in transmission is 93 per cent. At the Baldwin Locomotive works 2,000 horse-power was used (1889) to drive the shafting, and only 500 horse-power was delivered to the machines.

The results in Table IV. are such as one might expect, and are of no practical value either to determine the horse-power from the number of men employed, or, *vice versa*, to obtain an estimate of the number of men employed from the horse-power furnished.

The continuity of operation is a factor which largely affects the friction loss. In some lines of manufacturing, the machinery is in constant operation, and the loss in transmission, as determined by the usual methods, is practically a constant per cent. of the total power expended in operating the whole machinery; but in the average machine shop, year in and year out, I think we shall find only about one-half of the machines in operation continuously or carrying their full load continuously; therefore, if the friction horse-power be, say, 40 per cent. of the full load with all the machines in operation, there will be an average loss of about 60 per cent. under ordinary working conditions, when the time element is considered. In the same way, if the friction horse-power be 50 per cent. of the total, we shall have a loss, under partial operation, of about 70 per cent. of the power expended. Load curves obtained from tests made by the writer in a number of shops in which readings were taken every five minutes, show that these figures are very close to actual conditions. The useful horse-power fluctuates with the number of machines in operation and the load carried by each, but the average is surprisingly small as compared with the maximum. It will be noticed in Professor Benjamin's paper that full load measurements were taken about every hour, and the average of these was assumed to represent the average load on the engine.

The percentage found by dividing the friction horse-power (obtained when running light) by the average thus determined, approximates very closely to the values given above, and may be taken, in the opinion of the writer, as fairly representative.

In most of the cases shown in Professor Benjamin's paper the works were running full, which would indicate that the average friction loss throughout the year would probably be in excess of that here given.

Mr. Chas. H. Manning.—I think that the facts of No. 3 are sufficient commentary on the condition of affairs in the rest of the establishments to bring out the fact—which is a fact—that as long as a line of shafting will turn around without melting out any of the boxes or pulling any of the hangers down, people are very apt to allow it to go on, no matter whether it is in line or not. Of course in machine shops where there are large machine tools, there is a large proportion of shafting to each tool, and that is a strong argument in favor of independent electrical drives for all large tools in large shops. I think there is no question that most of the establishments spoken of here could afford, even at the high first cost, to put in independent motors for their different machines; that there is a very large portion of the power taken up in all large works by the shafting is certain, but that it is necessary is questionable. In the large cotton mills the shafting never should absorb more than 35 per cent. of the total power; that is, the loaded friction. There is considerable difference between the unloaded friction and the loaded friction of a shaft. These trials were all taken with the unloaded friction of the shaft; that is, the shaft not driving any work. When the shaft is doing its work there is a still larger percentage of power expended, of course, in turning the shafting. That was not recognized in this paper. The result of No. 13 is an excellent result, and about what it should be where there is a fair proportion of machinery to the amount of shafting which is required to run it. With new shafting, after it has got worn to its bearings for a large mill, about 15 per cent. is a fair allowance for the unloaded friction of the engine and shafting. Where it exceeds that, it is time to look around and line shafting up a little.

Mr. Ralph E. Curtis.—This subject has just suggested an inquiry to me, and I would like to ask the members if any of them have had any experience on one point. Some years ago there was exploited, and I think presented at this Society, a system of journals which, from the economy of lubrication and power, from the small attention required, the small trouble from wear, seemed to promise great things. We were given to understand that it had been used a good deal with factory spindles, and somewhat for transmission of power in factories. I refer to what is known as the fibre graphite system.* Since that time I have not chanced to come across anybody who has had any experience with that, and if there is anybody here who has any data on that point, or can tell where they can be found, I should be very glad to know of it.

Mr. Geo. I. Rockwood.—There are two directions in which power is to be saved, according to the modern idea and according to Mr. Benjamin's idea. One is in the direction of independent electric drives for every room and every heavy machine, and the other is to have a separate steam engine on every line shaft. I think the last is a custom in England for heavy machine-shop work, where they put a wall engine to drive one line of shafting, and they do not care anything about the economy with which it runs, so long as it will only run. I think that last consideration is a very important one and rules out electrical transmissions for many cases where they would seem to be a good investment. We rarely think of putting in a dynamo plant for lighting a factory without duplicating it. If we do not duplicate it, we connect with the city lines in some way. But we cannot put in any duplicate electric drives for shafting, and consequently we have not the reliability of operation to fall back on in running electric apparatus which we have in connection with shafting, and it is, I believe, generally admitted that it is far more important that shafting should turn over than it is that it should turn over economically for almost all business, especially in the class of business referred to in this paper. The subject of this paper is "Friction Horse-Power in Factories." I think it should be better "Friction Horse-Power in the Machine Shop." For I think we mean by factory a different class of shops from those mentioned here. These are shops without exception where mechanical work is done.

Mr. Oberlin Smith.—I think those of us who have seen some of the railroad shops in England will corroborate that view. In a place I have in mind, when a locomotive is worn out so

---

* *Transactions A. S. M. E.*, Vol. XIII., p. 374, No. 486.

that it is good for nothing else, they have a habit of taking the framework and the driver axle and the cylinders and the rest of the engine proper, and sticking it up on end against the wall, and coupling it direct to a line of shafting, with the usual efficiency of a superannuated locomotive. With regard to the last remark, that there is is not, perhaps, much future for electrically driven shafts, I beg leave to differ from the gentleman. If we are going to have shafting at all, I believe that the coming way will be to have electric motors on each shaft. I hope, however, that in ordinary cases we'll not have any shafting, but will put our motors right on each machine. This is undoubtedly one of the growing and coming methods which we are not entirely ready for yet, but which the very rapid improvement in electric motors is gradually bringing nearer to us.

Mr. W. A. Pearson.—If the comparison is to be made between driving by shafting, or by separate engines on the shaft, as compared with driving by electric motors, I propose to put myself on record for the electric method. The wall engine may be credited with an economy of 50 or perhaps 100 pounds of water per horse-power per hour, while the generator which furnishes current to the motor from any well-designed power station ought to work on 13 to 15 pounds of water, leaving the difference available to offset any difference in first cost.

I claim for the present generators and motors of standard type that they will run a given time on less than one-tenth the repairs which will be required on a steam engine of the same power. Generators and motors are being built to-day which give from 85 per cent. efficiency at half load to 90 or 92 per cent. at full load. The day has gone by when it is fair to accuse electrical transmissions of an efficiency between 40 and 50 per cent.

Another point which has been urged against the electric drive for shops has been the necessity for a great reduction of speed. This was true in the past, but improved designs have brought about a great reduction of the speed of the motors with a very small increase in the weight and cost of material. We have in our shops a great number of special tools with little motors on them, with one reduction, without any belt; one gear drives into another as you drop the speed of a lathe spindle by the back gear. The shafts in our shops run from 150 to 200 revolutions per minute. It is not much of a reduction from a motor at 800 revolutions.

Mr. Oberlin Smith.—There is an advantage in gearing the electric motor to the shaft instead of stringing it on the line. The power should be applied at the middle of a shaft at any length rather than at one end, and the armature should be readily accessible. I think most of our shafting runs too slowly. While speeds of less than 100 revolutions are disappearing, yet we will save by speeding up further yet. Moreover, the pulleys on our countershafts should be of larger diameter, so as to speed the belt and diminish the pull. Much line shafting might be run at 300 or 400 revolutions per minute, and then a motor at 700 or 800 revolutions a minute could be connected to it with quiet gearing and moderate reduction.

Mr. Pearson.—I do not wish to be understood as holding the opinion that the steam engine is in any danger of being supplanted. I think all will agree with me that the steam engine will always have its place. I do not think that we are going to run it into the river or ocean, but I think the generator and motor also are going to have their places. I was very much surprised in talking to the superintendent of motive power of one of our largest trunk lines the other day, when discussing air, electricity, and steam for motive power. Much to his surprise, although he was a man thoroughly conversant with all the details of his department, I found in conversation with him that he had not realized the amount of power which was being used on 132 miles of his road constantly. He made figures on it, and I do not know, if I asked you gentlemen, if you could guess anywhere near it or not.

It exceeded my guess four times. On the system in question, which was 132 miles, or very close to that, there is 100,000 horse-power constantly in active service. There is no gentleman who will stand here and argue for a moment that electricity is the power to drive a small number of trains. If enough trains are run to make the load constant, or nearly so, as, for instance, in suburban traffic, all must agree that electricity should supersede steam. We have to-day on some of our leading trunk lines as good locomotives as there are in the world. These engines are yielding about 1,000 horse-power. If indicated, they will show that the horse-power which they give out is costing at least 30 pounds of water, and as a rule is costing 50 pounds. Now an engine can be built - and there are many builders here to-day who would be glad to take the contract to build an engine of

2,000 horse-power—which will yield one horse-power hour on 13 pounds of water, and some of them down to 11 and 12. It can be seen at once that the power at the station only costs one-quarter what it does in a locomotive, and the very highest loss that can be expected is from 20 to 30 per cent.

Now when it comes to air, in talking with the same man, and I consider him to-day one of the best locomotive engineers on this continent, he asked, "In reference to air, steam, and electricity, have you seen a machine designed to drive a street car, or drive any device, which you would call a locomotive, which would stand the stress and strain of a steam locomotive?" He said, "The reciprocating engine has to be kept in thorough alignment or else it has to suffer." The electric motor has a rotating motion with all its advantages. Air is being tried to-day, because men want to see if there are any hidden virtues in it; but in my estimation they will find that there are none. We have gone through many stages of engineering; trying this, dropping it, and trying that and dropping it. Possibly our sons will take it up on the same lines as we have, if they do not take the trouble to read what some of us have done, and in that way save themselves many useless experiments. In talking with the gentleman in reference to applying electricity to his road, he said he thought the day was much nearer at hand than he had expected prior to our conversation.

Mr. Rockwood.—The utility of independent electric drives for each room and each heavy machine is questionable, to my mind. I recognize the fact that in the case of machine shops it is often true that a very large proportion of the total indicated horse-power of the steam engine is lost in the friction of the engine and of the line shafting. But inasmuch as so small a proportion of the cost of production of finished work in machine shops is represented by the cost of the engine-power required to produce it, I think all will agree that complication and heavy first cost are to be avoided. Simplicity and reliability are of the first importance. These qualities should be attained with as high a degree of economy as practicable. The English custom of driving each line shaft with a wall engine permits different lines of shaft to be shut down if the motion is not needed at any time, and there is much to be said in favor of this practice in the particular instance of machine-shop tool driving.

Mr. George R. Stetson.—The trouble comes with the motor in getting it upon the shaft at the speed at which we want to run the shaft. You have got to have between the motor and the shaft a belt, and that is one of the elements of costliness in the shaft business. I have found in the case of a shaft about four hundred feet long that the foreman, to keep it from side action had put in a number of side collars. Between the morning length of that shaft and its evening length—from the heat of the room and the heating by friction—there was an inch or so difference in its length, and of course it tended to spring the shaft, and created friction between the box and collars. I remember a very curious condition I found in South America. An engineer was putting up a line for a plantation. There were cross timbers, on which the boxes rested, running across the room. In one instance there was a jog of about three inches in the level of the timbers. He had put in bolts about four inches long between the couplings, and filled the space with old leather, and it was not only a hard shaft to drive, but it was very musical. It is largely a matter of the care of the shafting, and I am inclined to feel that, while I am between steam and electricity, and have bothered a good deal with both, the reduction of the speed of the motor to the conditions of the general application of a shaft is the troublesome point. When our electrical colleagues will get a motor which will run from twenty-five to fifty horse-power, which is what we want on a great many shafts, and run it at 250 revolutions, and put it on directly, that will be something we are looking for. I do not know whether that is accomplished yet or not.

Mr. Pearson.—It is. It just means increasing the material.

Mr. Stetson.—That is what is the matter.

Mr. Pearson.—In the last two years we have decreased the speed of motors more than one-half.

Mr. F. A. Goetze.—In regard to electrically driven machinery I would like to refer to the policy pursued by Mr. E. A. Darling, Superintendent of Columbia University.

At its new site the University will eventually have sixteen buildings, distributed over an area about twice the size of Madison Square Park. These buildings will require, for purposes of ventilation, about fifty or sixty fan-blowers, located, almost without exception, in the sub-basement and attic floors, and varying from five to ten feet in diameter.

In view of his experience at the College of Physicians and

Surgeons, where he has been throwing out the small fan engines and substituting electric motors, Mr. Darling has decided to run the fans in the new buildings with electric motors, directly connected wherever possible. I think that the advantages in the care and maintenance required for the motors and their electric circuits, as compared with the same requirement for the small engines and their steam and exhaust lines, will be apparent to all.

Another advantage which is gained by electrically driven machinery at the College of Physicians and Surgeons, and also at the Sloane Maternity Hospital, where the laundry machinery and fans are equipped with direct connected motors, lies in the ability to run this machinery with a storage battery whenever it becomes necessary to shut down either the steam line, dynamos, or engines for repairs.

Mr. Stetson.—I think we are rambling from the subject. The position which I tried to take was that at the present time it was questionable whether in the great majority of instances a motor could take the place of the regular methods of transmission. I have no doubt in angle work, where you have to turn a corner with belts, which is frequently done, that it would be advisable to figure very carefully whether the motor was not the thing to put there. I know from my experience that the slower the motor goes, the higher the price asked, up to date, and I don't know how much money it would take to get a motor down to 250 revolutions. I know that with a five horse-power motor for slow speeds, you get seven and a half high speed, and the price is the same. We trust for the best, and I have faith that it may come. But we are talking about what is taking place to-day. Now the gentleman on my right spoke about the fan business. Put a motor there by all means. You want that fan to go along about the same jog as the motor is going. It is the application of a motor to a different condition at which we pause, and if we are going to confine ourselves to this paper it is running shafting in machine shops.

Mr. Samuel M. Green.—The question of the use of the electric motor or of shafting would seem to be one of investment. By the use of shafting we can transmit power at an efficiency of 80 per cent. The gentlemen advocating electricity will agree, I think, that a higher efficiency can hardly be realized from the use of generators and motors.

Under these conditions it will be simply a question whether the use of shafting will require a greater or less outlay than the use of motors, and which will be maintained at the minimum cost.

I have had occasion to try the graphite bearings which have been mentioned by one of the speakers, but have not had success in their use. They crack and wear badly. I have not heard anything of this bearing for some time, and do not know whether or not it is still on the market.

Another question brought out by the paper is of much interest, and has not been touched upon by any of the speakers; I refer to the use of a large quantity of oil, and its purification. I have been unable to secure a purifier in which I have perfect faith. One always has some hesitancy in using oil the second time, even if it has been passed through a filter. I should be glad to hear from some one upon this question, if any one has satisfactorily solved it.

I think Mr. Rockwood's remarks have been rather misconceived. I understood Mr. Rockwood to say that they were using these small engines, and to say that he preferred line shafting to them. It seemed to me, from remarks made, that the gentlemen understood him to say that he preferred the small engine to the motor. I think there is no question that small engines are less economical than small motors under the same conditions.

Mr. Alfred Brooks Fry.—There is one portion of the discussion which has touched on a question which our experience in the United States public buildings in the treasury service well enforces as important.

A great many of our larger buildings, notably those used for post-office purposes, have a great deal of miscellaneous mechanism; they have small printing offices, and mechanism for defacing stamps, and post marking, and for other purposes. Formerly we drove this mechanism with shafting belted to small engines. But we have found practically a twofold economy in substituting electric motors for them. We find, given proper care and proper attention, that the motors built by any of the older reliable electric companies can be depended on. I do not refer to any particular concern, but our experience with the three or four of the older types of machine is that they are reliable, and we find that in actual practice it is no more expensive to install good wiring, and not so expensive to maintain it, as it is to install and maintain long lines of small steam pipe. Most of our units for miscellaneous separate power would be from five to eighteen horse-power, and we have found that the cost of maintaining motors and wiring, and the interest account on them, would not exceed interest and repairs on the cost of small engines of the same power having long lengths of small steam pipe.

I think almost every one here will agree with me, that for building and shop uses the loss in transformation in the electric motor is more than compensated for by the efficiency of the system and its cleanliness and convenience.

In our service we have gone into this matter carefully, and having completed a series of tests for about two years at the United States buildings, Boston, we are going to equip the New York post-office building with its own electric plant, taking out the various small steam engines, and replacing them by electric motors, because we have found that, taking into consideration the maintenance of long lines of steam pipe, the annoyance and the heat, the trouble with drips, and the fact that the small engines often cause twice as much trouble by unskilful handling as a motor would, we found it expedient to substitute motors. Of course we pay special attention to the incessant running of our plants. In the big post-offices they are nearly all absolutely dependent on the electric light. We do not have gas, upon the theory that if you have gas, and the engineers have anything to fall back on, they will not be careful about the maintenance of their electric apparatus. The Boston United States electric plant has an output of about 450 electric horse-power for the post-office and sub-treasury, and about 60 electric horse-power for the custom house. The plant has been in operation every day, including Sundays and holidays, for something over thirteen years.

The total time lost from accidental shut-downs is between five and six hours, and that occurred in connection with an accident to the feed system of an old battery of boilers. The time lost by sundry shut-downs for absolutely necessary repairs to the main steam-piping, or absolutely necessary repairs to the main shafting, will not exceed for those thirteen years, twelve working days of ten hours each day. The plant in question has not been in duplicate. We have had an average of fifteen to twenty per cent. spare apparatus; that is, usually, one spare engine and twenty to thirty kilowatts in reserve. We have found that the plant may be operated practically continuously, and without any great difficulty, provided the repairs are kept up, and provided constant attention is given to it. Moreover, I feel sure that I express the feeling of our service in saying that for small units of power, taking everything into consideration—the length of shafting, the slipping of belts, the care of belts, the care of bearings, the loss of power in long lengths of steam pipe—that motors, directly applied as practicable (motors of the best type), are a very efficient substitute for small engines.

Mr. Pearson.—In reference to hot journals absorbing power in transmission, my experience has been that care is the greatest preventive. The best way to obtain or enforce this is to investigate each case thoroughly, and then adopt some measure of exposing the man, either by dismissing him, or, to do as some railroad companies do, place his name on the blackboards on the different divisions of the road, stating the time, date, and the conditions whereby the journal became hot. I know where this method has been tried and found to be very successful in preventing hot journals.

Mr. Rockwood.—Since the subject of the paper is friction in shafting, I wonder that no one has advocated roller bearings. I will advocate them. I bought a few hundred dollars' worth of roller bearings about a year ago—heavy roller bearings, five and a half inches in diameter, down to three and a half, running 200 turns to a minute, and they have always run very nicely. They cost me about thirty per cent. more than the other kind. I got a guarantee from the manufacturer that if anything happened to them in two years, he would either give me another set or put in babbitted bearing at my discretion. Now, that shafting, although it is a great heavy shaft, with a lot of pulleys on it, and about 300 feet long, can be easily rotated by a man by simply putting his weight on the main driving pulley when it has been standing idle for a number of days. I personally believe that the roller bearing is going to be introduced everywhere in stationary work in the course of a few years. We need a certain amount of experimental data as to just how to proportion the roller bearing. But when I say roller bearing I do not mean hard rollers. As far as I know, there is only one concern in the world which makes a roller bearing which does not have a hard roller, and that is the concern of which I bought these boxes.

Mr. A. F. Bardwell.—In regard to driving line shafting, I would recommend where the shafts run at right angles that they be driven either by separate engines or motors; but the question of friction, which the paper is based on, can be reduced by putting in roller bearings.

While at the Brown & Sharpe Manufacturing Company, three or four months ago, I was talking roller bearings with Mr. Beck. He showed me a set of rolls on which they formerly had a six-inch double belt, but were unable to drive the rolls. They then put a four-inch belt on the back of the six-inch belt, and still were unable to drive them. They finally put in roller bearings, and then run the rolls with a three-inch single belt. From that they reduced it to a two-inch belt, and did run them with a one-inch single belt.

It will be seen that with roller bearings and a one-inch belt they did what they were unable to do with solid bearings and a six-inch and four-inch belt. When I saw the rolls, they were driving with a two-inch single belt.

Since the regular meeting we have made some extensive experiments in the friction of roller bearings and solid bearings on line shafting which was 208 feet long in both cases. The roller-bearing shaft was $2\frac{15}{16}$ inches in diameter, and the solid-bearing shaft was $2\frac{7}{16}$ inches. The total weight of the roller-bearing shaft was 6,364 pounds, and that of the solid-bearing, including such pulleys as were on the line, 5,163 pounds. The results are as follows:

The coefficient of friction for the roller-bearing shaft at a periphery speed of 60 feet per minute was .016, and of the solid-bearing at the same periphery speed was .0661. At 110 feet per minute periphery speed the roller-bearing coefficient was .0203, and the solid-bearing at the same periphery speed .0901.

It will be seen from this that for a periphery speed of 60 feet per minute the roller bearing only consumed 24.2 per cent. as much power as the solid, and at 110 feet per minute periphery speed the roller bearing only consumed 20½ per cent. as much as the solid.

This test was made with the belts all thrown off and the shaft driven by a motor which had previously been thoroughly tested as to its efficiency, and the results were very closely obtained in this way. The pressure per square inch on the solid bearing was 7.4 pounds, and on the roller-bearing shaft was 8.58 pounds per square inch; but this weight per square inch was not considered, as the pressure per square inch was so small in results.

Mr. Johnson.—I would like to say that I think a word of caution is necessary in speaking of roller bearings, and that they, like many other good things, have got to be well made and used with discretion. The company I work for, not very long ago bought a railroad travelling crane. It is pretty heavy; all the weight has to be carried on two pairs of wheels, and when it is run with its maximum load hanging from the end of the jib, the pressure on the journals is pretty high. To provide for this the makers put in roller bearings, or what were intended for roller bearings. All they did was to make the axle-box an inch larger than the journal, and put in enough pieces of half-inch cold-rolled shafting to fill the space. Instead of a bearing, it became a first-class axle-grinding machine right off; there was nothing to keep the rollers parallel and out of contact, so they turned at different angles and cut the journal. The result was that they had to be taken out, and boxes carrying plain heavy brasses, about in locomotive style, substituted, and I think it ought to be understood in speaking of roller bearings that they have got to be caged or kept parallel in some way, to give good results.

*Prof. C. H. Benjamin.**—The discussion seems to have drifted some distance from its moorings. The object of the paper was rather to show the faults of shafting and to suggest remedies than to hint at dispensing with it altogether.

It is doubtless true that in many cases electric transmission is better and cheaper, but it is also true that in most cases shafting is used and will continue to be used, so that the question now at issue is how to reduce the friction losses in shafting to a minimum. In this connection I can only repeat the recommendations made at the close of the paper, and I am glad to have them confirmed by so eminent an authority as Mr. Samuel Webber.

There is a limit in practice to the rotative speed of line shafting, and I should be inclined to set it at about three hundred revolutions per minute. I have had some experience with shafting at five hundred revolutions per minute, and should not care to repeat it. If it is desired to get still higher belt speed, it is better to do so by using larger pulleys. My experience with steel pulleys in such cases has been very favorable to them.

If shafting is round, is straight, and in line *when loaded*, and if the bearings are well fitted, and well oiled with good oil, the loss of power in compactly arranged shops will be small.

---

* Author's Closure under the Rules.

The use of graphite, grease, etc., is usually an excuse for neglect, and results in a large net loss due to increase in the coal bill. I do not suppose that there are many manufacturers who are seriously contemplating the use of roller bearings on ordinary line shafting.

It is to be noticed that when a shop is said to be running at full capacity, this does not necessarily imply that all the machines are running. Probably in most machine shops, when the full complement of men is at work, not more than one-half of the total machine power is used, if an average is taken for the day or for the week.

Allusion has been made to the fact that the figures in Table II. show the unloaded and not the loaded friction of the shafting. This is true; but where the shafting consumes so large a fraction of the total energy, throwing the machines on or off will have little effect on the friction.

If this paper and its discussion will lead some who read them to overhaul their shafting, put it in line, and keep it oiled, some good will have been done.

DCCXIII.*

RUSTLESS COATINGS FOR IRON AND STEEL.

FOURTH PAPER.

BY M. P. WOOD, NEW YORK CITY.
(Member of the Society.)

THE fourth paper on "Rustless Coatings" was to have been devoted to the subject of oils and other vehicles used in paint processes. Since the third paper was presented[†], so many examples of the vagaries of corrosion of metallic bodies have presented themselves which appear to claim the earnest consideration of engineers as to the causes and remedies therefor (the effects being in most cases too painfully apparent), that in lieu of the vehicle subject I present a case of corrosion of so remarkable a character, and one in which the record is so positive in its details, that it is removed from the category of speculation as to the cause of corrosion in this particular case.

How many more kindred cases could be brought forward of almost equal interest, if but reported for record by engineering observers, it is difficult to say; but the reported case of the corrosion of the floor beams in the old New York *Times* building,[‡] occurring, as it were, almost under one's feet in the short interval of thirty-five years, and in the hereinafter reported case of one of six days, appears to be an unanswerable argument of the dangers of using the oxide of iron in any form for the protection of metallic structures from corrosion.

This argument may be reinforced by the query, What is or what will be occurring to the metallic portions of the many sky-scrapers which are in process of erection in our own and other cities at the present time, under great dissimilarity as regards temperature, humidity, and other climatic conditions, but of one characteristic sameness—viz., being sealed in solid masonry or other coverings beyond the ken of inspection?

---

[*] Presented at the New York meeting (December, 1896) of the American Society of Mechanical Engineers, and forming part of Volume XVIII. of the *Transactions.*

[†] Detroit meeting, June, 1895, Volume XVI., paper number 637, pp. 663–706.

[‡] *Transactions* A. S. M. E., Volume XVI., paper number 626, p. 409.

Inspection of these buildings now in progress, as well as those lately erected, reveals possibly a slight improvement in general over the conditions apparent two years ago; but the improvement is a hollow mockery, and will bear fruit for repentance ere many years have passed. These structures, though more carefully painted than those erected before with more and heavier coatings of some kind of stuff called paint, do not appear in a single case to have received any attention or consideration as to the condition of the metallic surfaces before applying the protective coating beyond a possible sweep with a dirty broom to get rid of the rough dirt from the workshop yard, and a possible wipe with a piece of old sacking to remove the grease due to machining processes. Anything like a washing down of the parts with soda-ash or lye-water to remove the grease, and then pickling with weak acid to remove the mill scale, and a subsequent washing with lime-water to neutralize the acid bath, warming the work before painting it, and care to apply the paint only on clear, bright days, when no sweating can occur, or applying the paint in warm paint-rooms—it is safe to say that not in a single case out of the many skeleton structures of our modern sky-scrapers can this be found to have been the procedure. Not only this, but it is not done in the minor parts of the structure, where the light grillage and ornamental partitions should at least claim these precautionary measures to be used, and where the question of weight and complexity of parts could not arise to cause a decision on the side of Cheap-John methods.

It is an indispensable condition, in applying paint for the protection of metallic surfaces, that the surface must not only be first prepared by cleaning it to receive the paint, but the manner and time in which the coating is applied are strong factors towards getting a favorable result. A poor paint properly applied to a properly prepared surface will in general give a better and more lasting result than a good paint improperly applied to an improperly prepared surface.

In previous papers on "Rustless Coatings" read before this Society attention has been called to a few of the many cases of destructive corrosion which are apparent to the most casual observer—viz.: The Niagara Falls and Brooklyn Suspension bridges (*Transactions* A. S. M. E., Volume XV., paper number 598, pp. 1044-1046); the Victoria Tubular Bridge across the St. Lawrence River at Montreal, Can. (Volume XVI., paper number

626, p. 410), and the Firth of Forth Cantilever Bridge, Scotland (Volume XVI., paper number 626, page 407); the elevated railway and viaduct constructions of the Metropolitan Railway lines in the city of New York—and the evidently wrong conception from the beginning of what was necessary for the protection from corrosion of these costly structures, so that their life could be measured by the lapse of centuries instead of decades.

The time is approaching when the new suspension bridges between New York City and Brooklyn—the North River Bridge and the East River Cantilever Bridge, two of the most costly and important metallic structures of the many in the world—will require the most careful consideration by their engineer corps of the means to be taken to properly protect them from corrosion. Aside from the comparatively unimportant quantity of the masonry used in their construction, there are thousands of tons of steel embodied in them, divided and subdivided into thousands of separate parts, some accessible for examination as to their state at all times, but more which are so covered in when assembled as to utterly preclude any effective examination or the adoption of any protective methods other than those given at the time of their erection in place. The greater portion of the separate parts, large and small, which compose the whole structure will be comparatively unprotected during the greater part of the long years that they will be under construction, and subject to mechanical injury of whatever coating may be spread over them at the workshop, and also to that due to the varying changes in temperature and climatic conditions, aggravated by the presence of sea-air, to which inland structures of the same class of design would not be subjected, and whose complete failure from any cause would not be so disastrous as the partial failure of these.

The wires in the suspension cables of these structures (after having been freed from the mill scale of manufacture and drawing to wire) will no doubt be protected by some system of coating with zinc, tin, or nickel to properly cover in the screwed couplings used to join the separate wires, notwithstanding the fact that the electric welding of the wires would give a stronger connection at possibly the same expense. That screwed or twisted connections have always been used for this purpose may possibly prove too great a precedent to ignore. But why persist in coating such wires with either boiled or raw linseed oil instead of a reliable carbon or plumbago paint? Linseed oil, free from pigment, applied to any metallic surface, absorbs moisture freely as a sponge, swells up, loosens its bond on the metal, and rarely if ever renews its bond when dried out. A properly prepared paint could be as readily applied as the oil, would take no longer to dry, and would resist friction and moisture greatly in excess of an oil coating, and be a proper foundation to receive the final protective coating ere the cables were finished or covered in.

Engineering, July 31, 1896, pp. 157–158, reports from a paper read by Mr. Hector Macoll, of Belfast, before the Institute of Mechanical Engineers (before referred to), an interesting case of the " Unusual Corrosion of Marine Machinery " due to the presence of oxide of iron pigment:

'Corrosion in marine engines and boilers is usually confined to well-known parts, is not rapid in its action, and may be prevented or stopped by the adoption of suitable measures. In a recent instance its action was so widespread, so rapid, and so powerful as to render a short description of it interesting to engineers.

" *Steamer.*—The steamer *Glenarm* is a steel vessel of the long, raised quarter-deck type, built in Belfast in 1890, for the Antrim Iron Ore Company, and is engaged in their trade between Belfast and ports on the northeast coasts of Scotland and England. She is classed 100 A1 in Lloyd's register, with a deadweight capacity of about 800 tons; and her machinery consists of three crank triple engines with cylinders 17 inches, 27 inches, and 44 inches in diameter by 30-inch stroke; a three-furnace, single-ended boiler of the usual type, loaded to a pressure of 165 pounds per square inch, and a single-furnace, horizontal, multitubular donkey boiler. The shafting and other forgings are all of iron; the boilers are of steel, with iron tubes.

" *Submergence.*—On Tuesday, December 24, 1895, this steamer, carrying a cargo of about 650 tons of 'burnt ore' from Irvine to the Tyne, struck on a rock in the Sound of Mull, and was at once beached in Scallaster Bay, where the sea stood a little over her after-deck at low water, and close up to her bridge deck at high water. On the following Monday, December 30, after having been submerged six days, she was pumped out and raised. On the same day steam was got up in the main boiler;

but when about 30 pounds pressure had been reached, the steam valve on the donkey pump blew out, and it was found that the copper at the bend of the donkey feed-pipe next the main boiler had disappeared; fires were therefore drawn, and the boiler blown off. On Friday, January 30, 1896, all leaks having been so far reduced as to be under control of the salvage pumps, the vessel left in a tow for Belfast, where she arrived early on Saturday morning, all the salvage operations having been successfully conducted by Captain Bachelor, of the Liverpool Salvage Association.

"*Cause of Corrosion.*—On examination the machinery was found to present an extraordinary appearance; all wrought-iron work was deeply and roughly corroded, and planed cast-iron work rendered so soft as to be easily cut with a knife. These unusual effects were undoubtedly caused by the cargo of 'burnt ore,' and the following explanation has been contributed by Mr. S. Courtney, chemist, of Messrs. Francis Ritchie & Sons, Belfast, who investigated the subject at the request of Mr. Robert Browne, secretary and manager of the Antrim Iron Ore Company: 'Burnt ore is the residue from the manufacture of vitriol from sulphur pyrites, and is generally found to contain about four per cent. of sulphate of copper, together with a little sulphate of iron due to the sulphur not having been completely burnt out of the ore and becoming oxidized into sulphates. The sulphate of copper would be more or less completely dissolved in sea-water; and as the latter contains a considerable quantity of chloride of sodium, or common salt, this would react on the sulphate of copper, forming sulphate of sodium and chloride of copper. The sulphate of copper and chloride of copper are both soluble in water, and a solution of either or both dissolves wrought iron and cast iron. The chloride is more energetic in its action than the sulphate; but in time a solution of either, no matter how weak, will dissolve an atom of iron for every atom of copper present. Every 100 tons of cargo contained as much sulphate of copper as would, if available, dissolve nearly 32 hundredweight of metallic iron. The burnt ore might also contain a small quantity of free sulphuric acid, which would combine with the soda of common salt in the sea-water and set free hydrochloric acid, and the latter would rapidly act upon copper or brass.'

"*Extent of Corrosion.*—On the condition of affairs being discovered, the engines and boilers as well as the hull were at once opened up for survey, the underwriters being represented by Mr. Henry H. West, of Liverpool, and the owners by Mr. James Maxton, of Belfast. The entire work on the hull and machinery was afterwards carried out under the direction of the latter. The general condition of the engines was that wrought-iron work had been penetrated by corrosion to a depth of about three-thirty-second inch, and planed cast iron so softened that one-eighth inch had to be taken off before a hard surface was regained. Surfaces in bearing contact, or with oil between them, and all painted surfaces, were completely preserved. The detailed condition of the various parts and the measures taken to restore them were as follows:

" *Cylinders.*—These had partially filled through the hot-well, and from the drain cocks being open. The lower part of the intermediate cylinder was softened for twelve inches up, and was rebored one-quarter inch larger in diameter, and the piston altered to suit. The piston valves and liners in the high-pressure and intermediate cylinders were softened at their lower ends; the liners were rebored, and the valves fitted with new rings. The lower edges of the low-pressure slide valve and face were also softened; the valve was planed, and the lower bar of the face chipped off and replaced by a brass strip pinned on. In all other respects they were sound and good.

"*Piston-Rods and Connecting Rods* were turned all over, reduced three-sixteenth inch in diameter, and the former fitted with new neck and gland bushes.

" *Guides* had one-eighth inch planed off them before a hard surface was reached, and the guide-shoes were lined up to suit.

"*Valve Gear* is of the Hackworth type. The valve spindles and various rods were turned all over, to remove the deep pitting; the angle blocks had their planed surfaces reduced one-eighth inch, and the various parts lined up to suit.

" *Shafting.*—The crank-webs were deeply corroded, but as there was ample strength they were filled with 'hard-stopping' and painted. The shaft-journals and crank-pins were pitted longitudinally in the exposed spaces between the white-metal strips, and were also pitted transversely at the clearance spaces next the crank-webs; these were cleaned out, filed up, and the bearings adjusted. The thrust shaft was much corroded at the exposed parts of the collars and journal; it was turned all over, and the horseshoes and bearing were refilled with white metal. The intermediate length of tunnel shafting was much corroded at the exposed part of the journal; and as it was also reduced by wear, a new journal was turned further forward, and the bearing shifted to suit. The propeller and propeller shaft were found in good order.

"*Auxiliaries.*—The centrifugal pumping engine was considerably wasted in the rods, guides, etc., and was treated like the main engines. The duplex pumping engine and donkey-boiler pump were so seriously corroded as to be useless, and they were replaced by new. The brass steam valve and one pet cock of the duplex pumping engine were curiously wasted into holes, and the check valve and seat on the main boiler had the appearance of some substance, probably zinc, having been sucked out of them.

"*Pipes.*—From the appearance of the donkey copper feed pipe it was feared that all the copper pipes were seriously affected. A similar bend in the main feed pipe was therefore sawn through, but was found to have suffered no deterioration. All the pressure pipes, however, were taken down, tested, and annealed; no defects were detected, and they were all replaced. But in putting together the various steam and vacuum gauges the small connecting pipes were found in several places to be curiously wasted below the coupling nut.

"*Small Details.*—It is unnecessary to enumerate the bolts, nuts, cock handles, spanners, and such small details, which were wasted into mere shadows of their former selves, and had to be renewed.

"*Boilers.*—The safety valves of the main boiler having been eased when the vessel was beached, the boiler had filled with water; and the condition of both boilers looked serious. The front end plate of the main boiler was considerably wasted; the furnaces, which are of the spiral, corrugated type, had corrosive scores running in the direction of the corrugations; and the tubes were covered with a deposit of what appeared to be pure metallic copper. In the end, however, after careful drilling and gauging, it was found that an unexhausted margin remained in all except the tubes. These were all found to be seriously corroded in both boilers, and every tube was therefore cut out and renewed; after which the boilers were satisfactorily tested.

"*Steam Trial.*—Although the utmost vigilance and care had been exercised in examining as far as possible every point and detail, latent defects might have existed; and it was not with complete confidence that steam was again raised and the machinery tried. Neither then, however, nor in the months of continuous service which have since elapsed, has the slightest defect been perceived; and the machinery is now, thanks to its thorough overhaul, working with the efficiency and economy which it possessed when new.

"*Conclusions.*—The lessons to be learnt from this experience are probably obvious enough. Some of them are for the shipowner rather than the engineer, and therefore need hardly be referred to here; but it may be well to emphasize two of the others.

"First, the advantage of having in marine engines and boilers a small margin over the actual requirements for strength. In the various rods, shafts, and similar parts, such a diameter as would allow them to be skinned up; in the cylinders, valves, etc., such thickness as would allow them to be bored or planed afresh; and in the furnaces, combustion chambers, and stays, a slight excess of thickness over that required by the rules.

"Second, the advantage of good paint. Many engineers prefer polish to paint; but in this instance the latter truly cost little, and was worth much."

The final paragraphs may well claim serious attention. The cause and effect are so closely related that all doubts as to the cause are set at rest. As stated in previous papers read before this Society, the corrosive agent is found in the oxide of iron pigment as usually prepared for the market, and claiming great superiority as to quality by reason of its bright attractive color and purity over other forms of oxide pigments ground from hematite ores, whose dirty brown purplish color indicates the presence of more or less clay and earthy matters, wholly unreliable as a pigment even when mixed with good linseed oil, and whose varying qualities are readily detected in the separate consignments from the same manufacturer or compared with each other. Of the samples from the many concerns turning out this Cheap John material, none are good, all are bad and comparatively useless for the protection of metal, however admirably adapted by virtue of their cheapness to wooden structures, and are a poor investment for them if the merits of a better paint are considered.

How much damage is done to the internal parts of a marine vessel by the use of iron-oxide paints with which those portions below water mark in the holds are usually coated it is hard to realize. Bilge water is a very corrosive fluid, composed as it is of sea water mixed with the leakage from fluid cargoes soured by the heat of the hold, the sulphur water from the furnace, ashes and pyrites in the coal bunkers, mill scale and paint oxides of copper and iron thrown down in the course of repairs to boilers and hull and seldom if ever removed, continually agitated and washed over the exposed metallic surfaces, and aided by the presence of carbonic acid generated from the conglomerate mass in the confined air of the hold. It is scarcely to be wondered at that the vessel when in the dry dock for the too often extended yearly examination is found in such an advanced stage of corrosion that it is necessary to cut out and renew frames, bulkheads, and other parts so corroded as to endanger the safety of the ship in a seaway. The engineer in charge in the due performance of his duties will attend to the repairs, but the ship-owner who pays the bill when approached with the question, "What shall we coat her with to prevent this occurring again?" too often cannot see *his way* out of the dilemma, and says, "Give her the old stuff and let her go."

In the discussion following the presentation of the second paper on "Rustless Coatings," read before this Society (*Transactions A. S. M. E.*, Vol. XVI., paper number 626, p. 416), Mr. F. H. Boyer (member) cited the case of 1,800 feet of twelve-inch cast-iron pipe, laid two and one-half years and used to pump sea water, which had changed in its entire length to the condition almost of plumbago, and could be readily cut with a knife, and would have to be renewed as a whole. Possibly the presence near the inlet of the pipe of some acid manufacture or waste pipe from it, or some sunken cargo of iron oxide, may have contributed to this decay. Pure sea water is strongly corrosive, but not alike in its effect in all parts of the world; it is, however, stronger in its corrosive effect when mixed with sewage water, and this may have been one factor in the case. Mr. Boyer will confer a favor upon the engineering fraternity if he will give the results of his later examinations as to this case. Such records are of extreme value.

A late letter from Mr. Boyer, though it omits the analysis of the cast iron from which the pipes were made, gives some data regarding the pipe worthy of note. The pipe was twelve inches diameter, flanged connections, laid in air, except the seaboard end, where it dipped into the sea well for suction, the sea water being used for condensation purposes. The pipe appears to be in a worse condition at present than when reported at the New York meeting, 1894, when it had been in duty only two and a half years, and judging from its present condition will require entire renewal. The valve chambers of one of the duplex Worthington compound pumps connected to the main suction pipe, and the branch connections from the main pipe to the pumps, have been renewed. The deterioration of these parts was so entire as to cause loss of vacuum on the suction end of the pipe. There appears to be no change in the pipe where exposed to air externally, the attack being from the inside or salt-water contact; and though it was coated with the usual coal-tar coating at the pipe foundry, it appears to have been worthless to prevent the change and decay of the pipe, which appears to have been of unusual moment, as the pipe was originally seven-eighths of an inch in thickness, and the pump-valve chambers were no doubt quite as thick, if not thicker.

As the pipe was flanged, and required machining at the flanges, and the pump castings required machining also, the iron in both pipe and pumps is no doubt a soft, easily worked metal containing a large amount of uncombined carbon, the large crystals of the iron favoring an easy attack of any corrosive fluid by dissolving the iron and leaving the carbon unaffected. Pipes under pressure would have presented the same changes. Had the iron been close-grained, gray, or even white in color, and as hard, capable of being machined, the decay would have been less rapid, and the life of the pipe been ten to twelve times that now given.

Plumbago, or graphite, the substance into which the pipe is changing, is a carburet of iron, and, as occurring in nature, ranges from thirty-six to ninety-nine per cent. carbon, the foliated graphite being more pure than the amorphous, which is granular in character. Cast-iron cannon immersed in the sea for periods from sixty to one hundred years, are changed to almost pure plumbago, and when first raised and exposed to the atmosphere become so hot from the absorption of oxygen that they cannot be handled for a number of hours.

DISCUSSION.

Mr. A. H. Sabin.—I desire to add my testimony to the importance of the removal of mill scale from steel before painting. My own experience has been that mill scale gradually becomes detached in many cases, carrying with it whatever paint has been applied. There is a large field for men in charge of such work for experiments to find out how best to prepare such surfaces. In some of the railway shops all the mill scale is removed either by pickling or scouring, both of which are expensive and troublesome operations.

In the case of marine corrosion described in the paper there is only a special illustration of what is going on daily in many places. Copper solutions, especially if they are acid (as they usually are), have a very rapid action on iron, and the complex acid, saline solutions met with, especially about copper mining and refining works, are very difficult to deal with. I was lately shown in the office of Fraser & Chalmers, Chicago, a piece of brass pipe about one-eighth of an inch thick which had holes eaten through it by sixteen hours' immersion in one of these liquids. Almost any paint will greatly retard such rapid action, as it is shown by the report in the preceding paper that all painted surfaces were preserved; but I believe the most durable coating for such purposes is a true oil and gum varnish containing a certain amount of asphalt. I am informed by Mr. J. B. F. Herreshoff, member of this Society, that he has successfully employed such a material to retain concentrated muriatic acid for the last four months and also to prevent the action of 40 per cent. sulphuric acid containing copper sulphate in solution for several months. Such a coating would probably be useless in alkaline solutions, but acid and saline solutions are more common.

Such corrosion as has been described is considerably different, in my opinion, from the ordinary rusting in moist air, and more difficult to prevent; but cases are, no doubt, constantly occurring, and are of much importance. It is gratifying to note that the proper preservation of metal is beginning to receive due attention.

Mr. O. F. Nichols.—Rustless coatings for iron and steel seems almost a misnomer in terms. From a considerable and somewhat unfortunate experience with various coatings I am strongly inclined to believe that there is no known coating which will protect these metals from rust and consequent decay. The

Kentucky colonel said "that while there were different grades of whiskey there was no such thing as *bad* whiskey"; and I believe that while some paints are worse than others, no paint is absolutely good.

Mr. Wood has called attention to the fact that linseed oil "absorbs moisture freely as a sponge," and since linseed oil is the best if not the only medium by which we may hold paint in position on iron, we are certainly very much at sea if this is to take up moisture like a sponge. Having the surface properly cleansed and prepared—and we all concede this as necessary as washing one's face—it is still evident that it is only a question of time when the moisture shall work through the paint and oxidize the iron. There is little in the claim that good oxide of iron paints or red lead are active in the process of oxidation; both may be made inert, so far as such action is concerned, and it comes really to confidence in the material used to hold the fine powder and make of it a liquid paint. If lead and oxide of iron are considered distinctively active, graphite is certainly inert, and may with the same oil produce a darker-colored paint. Graphite paints do not harden thoroughly as lead and iron paints do, and are more liable to be scratched off on exposure. The oil still absorbs or leaks moisture, notwithstanding the change which it suffers on exposure, and the oxidation again sets in.

Latterly, I have come to rely quite as much on quantity as quality, and have insisted that at least three coats of paint be used, to be followed after a period of, say, five years with two more coats, the outer stopping the pores of the inner coatings. Four coats of a poor paint with good oil is probably more effective than two coats of good paint. The best protected structures are those which, like our naval vessels, have a thick coating of paint frequently renewed. Unfortunately, however, the coatings on our most important structures cannot be frequently renewed.

The worst cases of oxidation within my knowledge are, first, the posts of hand railings near the ocean when the salt mists from breaking waves kept them intermittently wet or moist with sea water, the moisture being frequently dried out by the atmosphere. After a few years of such exposure the bars are reduced to about one-half their original size, and cakes of rust drop or may be picked off a quarter of an inch in thickness. When the outer surfaces have become completely oxidized it would seem as if a protective coating was formed, so that the decay goes on more slowly. Second, I recall a channel column exposed to leakage from a water closet, where the ammoniate action produced even greater oxidation than in the case just noted. Rivet heads were reduced materially in size and covered with scales of rust one-eighth to one-quarter of an inch in thickness, while lattice bars one-half of an inch in thickness were, within a few years, reduced to about five-sixteenths of an inch in thickness. While such action will not be general, it is quite probable that the iron-work of our buildings may be exposed to leakage of this character, with corresponding results, unless better coatings than we now have are employed.

As Mr. Wood says, this question of coatings is most important near the seaboard, where the action of the salt air necessarily increases the rapidity of decay, and I do not believe we shall ever find in any mere paint a suitable protection for iron structures in these localities. It will not do to jump at conclusions as to the protection of the iron in future suspension bridges, nor to ignore the somewhat extensive experiments which have already been made by one of our prominent wire manufacturers to ascertain whether the electric welding is really stronger and more reliable than the screw joint and whether it is really more practicable or no more expensive. Modern engineers will be quite ready to ignore precedent if exhaustive experiment shall determine these questions satisfactorily. Incidentally, it is quite remarkable that, with the exception noted, so little attention seems to have been given to ascertaining the engineering efficiency of the electric weld in wire.

It would seem that some closer bond than ordinary coating or painting and something less porous than paint must be used for the adequate protection of metal structures; something akin to galvanizing, in which, perhaps, the closest union of the covering to the metal is secured, and for which the surface of the metal *must* be suitably prepared. The Bauer-Barff coating does not seem to be entirely satisfactory, partly, perhaps, because the coating is not thick enough, and this objection seems to apply with greater force to the electrolytic deposit of metals, like copper, nickel, or aluminum, as " rustless coatings."

Engineers will watch with great interest the japanning methods recently applied on a large scale to some of the greater pipe lines, and from which the results are at least encouraging. These methods seem entirely practicable for all building and most bridge construction, while the expense is not greater than one would think it should be. Mere expense must not be allowed to stand in the way of the protection of important works; it is protection we want, and this given, the end justifies the means, at least so far as exposure goes. It costs, perhaps, $5,000 to $6,000 per mile to paint our elevated railway structures, and if it costs ten times as much the increased expenditure would be justified if the protection was but twice as good.

We err, I fear, in laying too much stress on the preparation of the surfaces. Mill scale must be removed with the dust and dirt. Pickling, however, is difficult to do, and the weak acid must be removed or neutralized. For oxide of iron paints I am inclined to think that a portion of the oxide in the iron is amalgamated with the paint, and that the paint gets a better hold on the iron for its existence if it is not excessive in amount. Many tin roofs are in good condition after long years of exposure, and when they decay it is generally from attacks on the under side of the tin. Now, the rule for tin roofs is to allow a rust coating to form on the surface before painting, simply to hold the paint, which is generally a red mineral, none too rich in oxide of iron. I do not justify this method of painting, but it is so universal as to command attention in this connection. Many structures have been quite well protected in this country and abroad by the frequent use of good red lead, and generally without resorting to extreme methods in cleansing the material. The ideal coating is one which, almost regardless of first cost, can be easily applied to metal under ordinary conditions, and which will certainly prevent its rapid decay.

It will always be a problem, whatever coating is used, to protect the connections of pieces which can never be repainted, and in which oxidation is most liable to occur from the collection of dirt and moisture in and about them. A free and frequent use, about these connections, of the coating selected is probably the best if not the only relief at hand.

Mr. L. L. Buck.—I have read Mr. Wood's paper on "Rustless Coatings" very carefully and was much interested. While I would like very much to find such a rustless coating, I do not think I could at present furnish anything of much value in discussing it. When we shall have taken apart the old cables of Niagara Suspension Bridge, I think they will be interesting, as the wires were boiled in linseed oil, and when the cables were being served the interstices were flushed with red paint, though I cannot give the name of the paint, as I have been unable to find any record of it. I have heard it spoken of as "Spanish brown."

Last winter, in blasting for the Gorge Railroad, a rock was thrown which struck one of the cables, cutting the wrapping for about ten inches in the length of the cable. The wires next to the wrapping were clean and smooth. They have been in use for upwards of forty years. My experience in coating iron-work with raw oil before it leaves the shop has been favorable. The iron for the Niagara Suspension structure was so treated and laid out on skids all winter, in open air and snow, and during the following spring as well, with no rusting except where a piece had been used to slide other pieces on so as to abrade it. The surface also received paint nicely. The advantage appears to be that the raw oil penetrates the scale and every least crevice better than either boiled oil or paint.

The rusting of the strands at the ends of the cables was due to their having been bedded in masonry and to the continuous lengthening and shortening of the wires from varying stresses, which caused moisture to work in and rust the wire.

Mr. Wallace Christie.—A friend of mine, who is particularly interested in this subject, and who has done some experimenting himself, has written me, in part, as follows:

I append a series of questions needing to be answered:

It has seemed to me in what I have said, and in what experiments I have carried out, that if acid is not thoroughly removed from plate after pickling, it causes rusting to go on underneath the painting. I presume there are some approved means of washing in lye or hot water in order to remove the acid. I thought it would be well to see if there was any information on this point, and to know if even these precautions will remove the acid thoroughly. It seems as if it would eat into the metal, in any case, a little.

The second question, I think, will be readily understood from the remarks I have made on the first. I have understood that acid will injure plate a little, and, of course, if it eats any of the metal away there is no doubt of the harmful action.

I have not seen any items on the cost of pickling, and anything of that sort would be instructive, taking the ordinary thickness of boiler plate for an example.

I have heard of the use of the sand blast upon the Clyde to clean the plate upon ships' bottoms before painting, and I know of its being used in this country for the purpose of cleaning the cores from castings, but I do not know whether it has been used here for cleaning mill scale from plate or not. I had a few small pieces cleaned a short time ago in this way, and it left the metal the clear-white, silvery color which one recognizes as the pure steel, and leaves a very good surface for painting. It looks very nice, but the thought occurred to me that if it was so good some one in this country must have tried it, and perhaps there might be some data upon the subject.

I have found, in regard to graphite paint, that it is very hard to get even the second coating to cover the metal thoroughly. I presume it may be due to the lubricating constituents, for it crawls and leaves some places entirely bare. I understand it is the flake graphite which is used as a lubricant, and perhaps this is the kind which will not unite well with linseed oil. There is an amorphous form of graphite which, I believe, is used by some concerns in making graphite paint. At any rate, this form seems to apply better, but I do not know whether it is due to accident or the different kind of graphite used.

In regard to my experiments, I have not sufficiently far advanced to say anything about them.

My questions regarding the painting of iron and steel are:

1. What is the best method of pickling metal for the purpose of cleaning prior to painting, in order that no traces of the acid may be left under the paint to cause rusting?
2. Does pickling injure the strength, lower the elastic limit, or change the chemical composition of steel in any way?
3. What is the cost of pickling process per square foot of plate?
4. Is the use of the sand blast known of or used in this country for the purpose of cleaning mill scale or rust from plate?
5. Is it a practical substitute for pickling?
6. Why does graphite paint crawl when drying and leave portions of the plate uncovered?
7. Is this just as likely to happen with the amorphous form as with the flake graphite?

Mr. F. H. Boyer.—The chambers of the iron pumps at Cambridge during the past year have had to be renewed, the interior having given way. By an examination I find that the softening is increasing very rapidly since the last report.

I think the history of the old chain bridge at Newburyport, Mass., would be of interest at this juncture. (Fig. 87.) The description of this was given in the *Scientific American* on the 17th

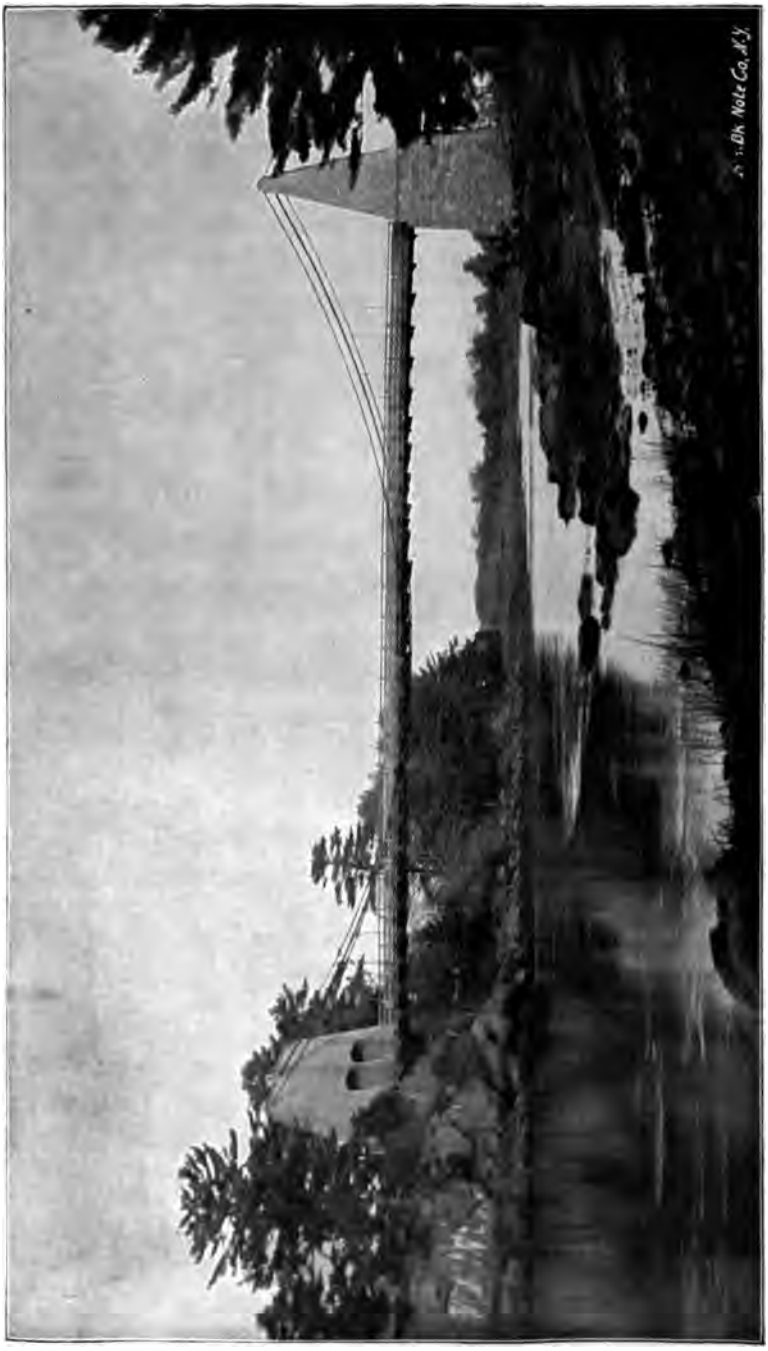

FIG. 87.

of October. I made a personal examination of the bridge on Sunday last, and found the following conditions:

The chain bridge on the Merrimac River, between Amesbury and Newburyport, Mass., was built as a single span in 1792. In 1810 it broke down by an excessive load, and was rebuilt as a double bridge in the same year. Original cost about $38,000. The chain links are of one inch square iron, welded by a blacksmith, welding being in the bend of the link, the metal being upset by the process of welding, about 25 per cent.

In November, 1896, one hundred and four years after the making of the chain, the hammer marks are plainly seen in the welds. A coating of black paint was put on in former times, but nothing has been done in this line for the past thirty years. The bridge is located about three miles from the ocean, and salt water flows under the structure on the change of the tides.

I think that it is the ironmaker who should assume the responsibility of making a rustless and indestructible metal, as it has been done, as proven by the description of the old chain bridge at Newburyport.

Mr. Sabin.—I should like to add, further, that the material which was on board this boat, which is described in the paper just read, was undoubtedly intended for making paint, but it was not the kind of material which is in most common use in this country for making oxide paints. The ordinary oxide paints are natural minerals—ores ground up and dried, frequently roasted at a low heat, not above a low red heat. The burnt ore, as it is called in England, is a residue from acid manufacture—from burning of iron pyrites to make sulphuric acid, and the iron pyrites usually contains a small amount of copper pyrites, which crystallizes with it, and to the presence of that copper the greater part of the action described is undoubtedly due. Now, we do get those paints in this country from England. There is quite an importation of paints from England. I am not aware that any of the American acid manufacturers are making any use of their waste in that way. The natural ore paints here are too cheap and labor is too high to pay for handling those residues here. But we do import quite a good deal—I should say, in my judgment, the higher grades; and the natural iron-oxide paints are not as dangerous as those are. I have myself no high opinion of oxide paints. I have placed my opinion on record before in that matter. But I do not suppose that an ordinary iron-oxide paint, such as we commonly meet in the market, would have such an effect as those pyrite residues.

Mr. William Kent.—In regard to the electric welding of wire I had a little experience at one time which was very unsatisfactory. The wire was not nearly as strong in the weld as it was elsewhere, and there is a good reason for it not being so strong in in the weld. We cannot electrically weld wire without annealing it, and as wire is strengthened by the hardening process of drawing through the dies, it is far stronger unannealed than it is annealed; so it would be a weakening process to attempt to heat it electrically. I do not see how a much better joint can be made for wire than the tapered screw joint used on the Brooklyn Bridge.

Mr. E. G. Spilsbury.—In regard to the same matter, we have been carrying out quite a number of experiments on electric welding for some time past, and it has resulted in our being able to guarantee ninety-five per cent. of welds to have about ninety-two per cent. of the original strength of the wire.

Mr. Gustavus C. Henning.—What carbon in the steel?

Mr. Spilsbury.—Between .45 and .47. We were making these tests for Mr. Buck of the East River Bridge.

Mr. Kent.—Hard drawn wire?

Mr. Spilsbury.—Hard drawn wire; what is known as patented wire.

Mr. Henning.—What strength?

Mr. Spilsbury.—The strength of the wire is about 180,000 pounds to the square inch.

Mr. Henning.—We made experiments on wire in all kinds of joints for the cables of the Covington and Cincinnati Bridge. The wire used is No. 6 gauge, .19 diameter. We have tried electric welding, brazing, and several other methods; brass, copper brazing, and different things; and the conclusion has been that electric welding is not satisfactory in such a high carbon steel, because the steel cannot be in good condition after being subjected to the high temperatures reached at the welding point by the electric current, and, besides that, about an inch from the weld the steel is very much softened by the annealing effect of the high temperatures, and the strength of these wires fell from 5,600 pounds down to 3,500 pounds and less. That is altogether inadmissible. Then, by brazing, we found that we could make the joint as strong, whether made by the use of copper or brass, as the wire would be when somewhat annealed, but still it would lose considerable in strength. However, the coupling as used on the East River Bridge has been discarded, except in a few places, because it has a great many other disadvantages, and is very expensive to make. It requires a complete outfit which costs several thousand dollars, and when you get through with it, it is worth nothing; so in that bridge many of the joints are made by brazing, as giving the greatest satisfaction, because the loss occasioned by the brazing was not of any material import, and it occurred only once in a great distance; but at certain points, couplings were used to join them together. We also tried the protection of the metal in the structure against corrosion, and after a number of experiments the anchor bars were coated with paraffine wax. We found that we could immerse a piece of steel with the mill scale on it, for an indefinite period, in the strongest acids, provided the paraffine was put on warm. The bar did not have to be heated, but the paraffine was put on warm, and it was made sure that every part was covered, by simply immersing the pieces in the liquid paraffine; while in the bridge the anchor bars were left with a little space all around, they having been first coated by paraffine before being put in position; all the crevices were then filled up by hot paraffine poured in. In the bridge the old cables will remain and the new cables are being placed above them; then the two will be united by a proper detail to carry the new steel structure and replace the old. This structure was built in 1865, and is now being strengthened and enlarged; and although it was finished thirty years ago, there is no apparent corrosion. There was a lot of it at some points in the anchorage, because, where the wire issued from the masonry, the wire was allowed to rub slightly, and thereby the protecting oil coating was removed. In that case the wire is only protected by the galvanizing, as was done in the East River Bridge. But after the wire is accepted it is coated with linseed oil, and then when it is put in the bridge it is again coated with linseed oil, as a great deal of this oil of course is rubbed off in transit, because it requires considerable handling. When all the strands are made and the wires are squeezed together, the outer wire being also coated with linseed oil, the whole cable will be painted with white lead, and several coats put on, so that the whole cable will be really surrounded by an envelope of white lead, and that being flexible, it has been found that the change of length of the cable or any other change due to the strains applied by the suspenders transmitting the loads does not crack that coating at all, and the result is that the cables are perfect, just as has been found in the Niagara Bridge cables. No paint will be used at all, and on all the steel work paint has entirely been discarded, because all these iron-oxide paints are simply worthless, except for the oil that you put in them; and it gives no better chance for adulteration than to use these iron oxides, because you never can tell how much there is in, or how much has been put in afterwards, and the oxide will not stick, and it will often prevent the oil from sticking to the material, and it is entirely out of the question in bridge structures or other big structures to remove the mill scale from the work. It would cost about as much to do that as to build the structure, because if it is not done thoroughly and at all points, it is worthless; and to do it at all points is very expensive. I think on the Pennsylvania road it is done for fire boxes and boiler plates, because the life of the boiler depends on the proper protection, and the steaming power also depends somewhat on the clean surface exposed to the fire. But in out-door work, undoubtedly, some simple, pure material like paraffine or linseed oil has given all the satisfaction that is necessary for any purpose. All paints are adulterated. Oils are adulterated too. But it is not so difficult to get a pure oil as it is to get a pure paint; and all the experience with suspension bridges, except where the cables have been injured accidentally or by neglecting the minor details, such as allowing wire to rub against hard materials, removing the protecting coating—in all those cases, after many years of use, the material is entirely free from rust. Cables have been carefully examined in a number of cases, and there does not seem to be any difficulty at all. Of course that is a special case, and other structures cannot be treated in the same manner.

Mr. H. M. Lane.—I notice the anchor bars were referred to. I understood they were immersed in paraffine and no paint is to be used.

Mr. Henning.—They were covered with paraffine, and after they were put in the anchorage the whole of the spaces were filled up with paraffine, poured in hot, the bars already having a coat of red lead put on.

Mr. K. Torrance, Jr.—Are these brazed wires always reliable? Can you always tell whether a man has brazed a joint properly? I should think an error might come in the workmanship.

Mr. Henning.—Of course a man can always make mistakes. But so many tests have been made of it, that we know that when a joint is brazed well on the edge it is certainly good on the inside. It is not like a weld, which might be bad on the inside and good on the outside. But if the wire was hot enough to braze at all, it certainly was brazed on the inside. If the edge is bad, no chance is taken, but it is brazed over again. We find that either brass or copper brazing is perfectly satisfactory, and makes a wire of uniform thickness everywhere, and never allows the wire to catch in passing over the sheaves, in running it over the towers, and a great many other difficulties are avoided. We find very little difficulty in brazing.

Dr. Charles E. Emery.—The first consideration relative to the protection of a metal structure from oxidation seems to be an examination of the cause of corrosion. If, as has been claimed, corrosion is, in the main, due to the small quantity of carbonic acid in the atmosphere absorbed by moisture in contact with the metal, and the moisture is at times partly evaporated, so that the concentrated acid solution attacks the metal virulently, evidently the way to protect the metal is simply to cover it thoroughly with a substance which will keep out the moisture. Paints of various kinds are used for this purpose. The interior of a tube does not corrode if the ends are closed, even when not painted, and, where the air is dry and current sluggish, corrosion takes place quite slowly. I had the great pleasure—in a scientific sense—of studying these questions when repairing one of the original iron steamers built in this country, which had at the time been operated in the merchant and government service for over thirty years. It was built with simple bar iron for frames, with plating held on by clamps bent down over the bars and riveted each side. The officers, in cleaning the interior of the hull, found scales so thick that they feared their removal would let in water from the outside, and some other evidences had caused a feeling of distrust as to the safety of the vessel among the officers and crew. I inspected the vessel for the purpose of repair, with private instructions to keep her going, if I could, with moderate repair, on account of shortness of money. I had the vessel docked, and her bottom did sound very much like a drum in many locations. Confidence was restored by asking the different officers, particularly those who could not use a chisel very well, to try and cut holes through the bottom so that I could inspect the thickness, and, as the plates were without substantial backing, they had a pretty hard time. [Laughter.] At the same time I instructed the engineers to carefully sound the bottom, and where it seemed particularly thin, to cut a hole the size of a rivet and ream it out, so that the thickness could be ascertained, and not hesitate to put the hand-hammer through the bottom wherever it was reasonably possible. The vessel was built for light draft, probably, with few plates exceeding five-sixteenths of an inch, and many one-quarter inch thick. The space inspected was nearly 200 feet long, and 30 to 40 feet broad, and a large proportion of this great area was in fair condition. Places as thin as one-sixteenth inch were found, but were mostly of comparatively small area, and the metal was well supported by thicker surrounding metal, so that cavities leaving one-eighth inch of metal were not touched. On this basis less than twenty patches were required, many of them containing only a few square feet, though at a few places a plate as large as could be procured was laid over the other sheets and secured at the edges by rivets to the thicker metal. The vessel ran about five years with these repairs, and, finally, about ten years ago, at my suggestion, was brought North, all woodwork removed, the iron scraped, new angle frames put amidships, other frames stiffened by angles, and the hull covered with wood planking bolted through the old plates, and occasionally secured by a hook bolt over a frame, making practically a new composite vessel, which was running at last accounts.

The original inspection of the exterior and interior of that vessel showed what ordinary care would do with an iron vessel throughout that long period. At points where there was much rubbing of the hull, as in the bilges abreast of the machinery, the plates were weakened to the greatest extent simply because the paint applied for protection was sooner rubbed off. Forward and aft, where the vessel narrowed, at points under the floor and behind the ceiling, accessible with difficulty, masses of what appeared to be rust over two inches thick were found, and on ordering the men to break them loose, they feared their chisel bars would go through the bottom, but were told to proceed nevertheless. Instead of finding a hole, the iron under these masses was generally found in fair condition, and the masses represented masses of rust, paint, and whitewash which had accumulated from year to year with the desire to keep everything clean and covered up for neatness and protection. From these illustrations we see the philosophy of the protection of iron, and one of the papers has stated it in substance. We must keep it covered and prevent the air from reaching it. Linseed oil is an important component part of good paint, but it does not follow that it should be used without a pigment. In drying, linseed oil becomes very porous; in fact, under the microscope it resembles a piece of tripe. The principal object of the pigment is to fill the pores, and the finer the pigment the better they will be filled and the more nearly water-tight the paint will be. Lampblack is an ideal pigment for some purposes. On iron plates which have laid about for a considerable period before use, the black letters and distinguishing marks remain frequently after all other paint is destroyed; but ordinary paints require more body, and, notwithstanding the great variety for selection, good red lead is most favorably considered and most frequently employed in naval work, particularly for direct application to the iron, and a second coat, made largely with white lead, is applied with another pigment to give the desired color. The old ship had no scientific care. As soon as rust appeared or the surfaces became dirty they were painted; some parts were whitewashed. Again, when painting was ordered, the sailors were careless, and painted over the whitewash; but the result was that the air was kept from the plates in the least accessible part of the vessel, and they were protected. The same principles should be applied in protecting other structures. If a rust spot appears, scrape it and paint it. Keep the iron covered. If the paint is mixed properly, it can best be applied by common laborers, as it is the business of skilled painters to make a finish and save paint.

Mr. Wood.—Reference has been made to the decreasing of strength in the electrical welding, and as Mr. Spilsbury thinks that possibly it runs from 92 to 98 per cent., 92 being the limit of the reduction in strength, that amount of the original strength of the steel is left; and the advocates of the screw couplings are equally strong that that is the proper way to join it, and yet what is the strength of the iron left after the screw coupling is put together? Certainly the threading of the wire enough, there being no upset, to get the full depth or strength of the wire at the bottom of the thread must weaken it, and where it cannot be screwed beyond the last thread of the wire and the first thread of the coupling, there is the element of weakness and the nick which any little strain will start as a fracture, and yet that coupling will have the same percentage of strength as the wire; and I never have been able to ascertain from the Brooklyn Bridge people the tests on that point. I think Dr. Emery has been in a better position. Possibly from memory he could recall what that is—the strength of the screw coupling tested after the wires are joined as compared to the strength of the whole wire from which that coupling is made.

Dr. Emery.—I think that has been stated by Mr. Henning. They ran up to 96 or 97 per cent.—very near the ultimate strength.

Mr. Wood.—That I understood was the brazing method.

Mr. Henning—No, sir; it could not be done with brazing. It is done with screw coupling for the reason that the thread is tapered; being a special thread, it runs out to nothing, so that the first thread on the wire is very shallow and practically runs out, and it weakens the wire very little; at the end of the wire there is a full thread.

Mr. Wood.—I know that the ends of the wire in the Brooklyn Bridge were tapered under the supposition that as they screwed them together the tapers would slip by each other and you would get a further admission for the wire than you would with a plain end, and it was thought that the bruising of the wires, as these scarfed joints slipped past each other, also added to the strength of the joint. That position I never have been willing to concede. I think that the couplings would have been equally strong and would have endured as much fatigue and service if the end of the wire had been cut off square and it had simply been screwed together butt to butt, or so far as the last taper of the wire would have allowed it to enter the couplings.

Mr. Henning.—The ends of the wire were bevelled, because in running around the sheaves the wire couplings would untwist occasionally and fall into the river; but by bevelling the two ends—they had about a sixty-degree angle—it prevented the wire from uncoupling. The coupling was turned on to the wires, having right and left threads; the wires were not turned into the coupling. When the ends overlapped there was nothing to undo them except to hold the two wires and reverse the coupling. It was simply a means for preventing the wires from uncoupling in drawing them over the river.

Mr. Wood.—Do you think there was below 97 per cent. of the strength of the wire, on an average?

Mr. Henning.—My recollection is that 92 per cent. was reached. The strength of the wire was frequently only 83 per cent.

*Mr. M. P. Wood.**—Mr. Sabin calls attention to the dangerous qualities of the oxide of iron paints made from burnt ore (as per the case of corrosion cited in the paper), and which contain notable percentages of copper salts as well as free sulphuric acid, both active agents not only of corrosion to the metallic surfaces coated with them, but they are also the cause of the decomposition of the oil or other vehicle with which the pigment is mixed. These burnt-ore paints are imported to this country and used to the extent of hundreds of tons yearly, entering the field of competition with our own manufacture of iron-oxide paints made from ground hematite ores, the roasting of which is not alone to expel the moisture, but the sulphur which all such ores contain. Both the burnt-ore and hematite-ore paints are of a dirty, purplish-brown color, unattractive to whatever structure, wood or iron, they may be applied.

The oxide of iron pigment derived from the roasting of copperas, the bye-product from wire manufacture, is by far the brightest and most attractive in color of all of the iron-oxide paints, but, like all the other kinds of oxide pigments, contains a large per cent. of free sulphuric acid not expelled by the roasting process, and, to correct the injurious character of which, the paint-makers mix carbonate of lime with the oxides, the acid being in a measure neutralized by changing the carbonate to a sulphate of lime, an inert substance that in its native state is sometimes used as a cheap pigment by reason of the ease with which it is ground and incorporated with the oil, and its neutral character in combination with other pigment substances. It is well to note, however, that the paint chemists of our leading railways, who use mixed paints by the hundreds of tons yearly, test these oxide of iron paints, and where over a given percentage (generally five) of sulphate of lime is present, condemn the invoice on account of the perishable nature of the adulterants. Inasmuch as the production of iron-oxide pigments in the United States for the year 1896 amounted to 75,219 short tons, in addition to some 10,000 tons imported, it shows the extensive character of their use for all paint purposes on wood and iron structures

---

* Author's closure, under the Rules.

of high and low degree, and no doubt the higher class of these iron structures get their share of it.

Mr. Nichols remarks that graphite paints are liable to run and are uncertain in covering power from this cause, and attributes this difficulty to the lubricating nature of the foliated graphite used for the pigments. Foliated graphite is hard to grind to the requisite degree of fineness for a good pigment. The advocates of graphite paints lay much stress upon the ideal character of the foliated pigment, lapping and overlaying each other like the scales of a fish; but a sample of this ideal coating under the microscope shows the said scales to lie in all conceivable directions without any reference to each other as a protection for the covered surface. This ideal coating is rather mythical in character when taken in connection with the fact that the manufacturers advertise as a *special brand* of their graphite products a silica graphite which contains a notable per cent. of ground silica incorporated with the foliated graphite, and is supposed to correct the want of covering power or tendency to run which the foliated graphite labors under. And so it does in a measure; but it is safe to say that could the graphite manufacturers use their scrap material, unsuitable for pencils, crucibles, and other purposes, in any other form than as a silica-doctored pigment, they would do so and not risk a comparison of its merits with a sample of amorphous-graphite pigment prepared from nature's ore, which will not only grind finer than any silica-foliated graphite sample, but will mix better with the oil, dry quicker without running, dry harder, and prove more lasting in every respect, and, furthermore, contains no acid to be cajoled into innocuous desuetude, or into inert substances to be easily broken down to lower and decaying elements, and which has no injurious effect upon the oil to hasten within itself the process of decomposition and decay.

Mr. Nichols remarks that for wire suspension bridges the wires need some coating more durable than paint coverings, and that galvanizing seems to be the best coating for this purpose. This is, no doubt, correct for ordinary steel or iron wires; but to secure the maximum of strength with the minimum of weight the use of high carbon crucible steel oil-tempered wires will be requisite, and as galvanizing, as well as the electric welding or copper soldering of the joints, appears to reduce the strength of the wires materially, the screw joint must be adopted, with a cold process of electro-deposit of zinc or copper as the protective coating, similar to the Cowper-Cowles process, in use at many shipyards in England for the coating of the frames of torpedo boats, which is fully described in the *Transactions of the American Society of Mechanical Engineers*, Vol. XVI., 1894, paper number 626, p. 365. This cold process, when zinc is used as the protective coating to the metal, is called zincing, and does not affect the strength of the wire by annealing it, but leaves it at the original strength of that due to the oil tempering. Furthermore, it avoids the difficulty experienced in all hot galvanizing processes. The formation on the surface of the metal of a thin film of the basic chloride of zinc, which material is of a hygroscopic nature, acts as a repellent to prevent the close adherence of the paint to the metal, and the paint dries as a skin over it. This action is due to the sal-ammoniac bath, necessary in all hot galvanizing processes. A remedy for this tendency of the paint to peel off is given in paper No. 626, p. 360.

In the electro-deposit of copper by the Cowper-Cowles or other cold processes for the protection of wire surfaces, complaint has been made of the porous nature of the copper deposit. This difficulty is easily overcome by redrawing the wires as a final process before painting them and placing them in the cables.

Mr. Buck's remarks upon the apparent good condition of the wire cables of the Niagara Falls Suspension Bridge are of interest, as the writer has been and is at variance with him upon this special point of protection from corrosion of all wire and other metallic surfaces thus coated. Mr. Buck states that the wires in the Niagara Bridge were boiled in linseed oil (evidently as they came from the wire manufacturer in coils) and subsequently were treated with raw linseed oil when laid out ready to assemble into the cable, and finally at the time of placing them in position were served with a coating of (presumably) Spanish brown paint, and then wrapped with an iron wire and white lead-paint covering. Mr. Buck also states his preference for the use of raw linseed oil as a protective coating for metallic surfaces, as the oil penetrates or soaks into the mill scale of manufacture, etc. The writer's experience points to the direct contrary conclusion. Mill scale is a ferric oxide which is hard enough to scratch glass, and is often used to clean and polish metallic surfaces. Formed upon the surface of any metallic body, it is as impervious to the *soak-in* action of any paint or oil coating as the metal plate itself. It may be coated with oil or paint, and if the scale is loose from the metal or free in spots, the oil may work in between the scale and the metal, but the very hardness and impervious character of the scale will prevent any subsequent drying of paint or oil by preventing access to the air, from which all the effects of drying or resinification of the oil are due; the external part of the oil coating dries and leaves the enclosed film of oil as tightly sealed as though it were in a jug. Linseed oil or paint does not dry in a closed vessel, however long kept. It needs and must have air to induce the hardening of the coating, whether a pigment is mixed with it or not. Mill scale should have no part or parcel in any protective methods adapted for the protection from corrosion of any structure the cost of which is reckoned by thousands of dollars, and much less so when the cost is reckoned by the millions.

Raw linseed oil contains from five to eight per cent. of water and impurities called "mucosities," composed of vegetable albumen and mucilage, which prevents drying. Raw linseed oil requires from five to six times as long to dry as the same oil which has been boiled *by heat*, which evaporates the water in the oil and throws down the impurities in it. These impurities, unless removed, are the first to decay, and add the acids of decomposition to destroy the oil in the paint coating. No pigments added to the oil will prevent this decomposition of the impurities. They may delay its action, but cannot prevent it. The changes in linseed oil due to its boiling are quite complicated, and have not been clearly defined by analytical chemists. We do know, however, that during the process of boiling, the addition of sulphate of zinc throws down the "mucosities" to a notable amount, and the further addition of peroxide of iron (umber), litharge (protoxide of lead), minium (red oxide of lead), peroxide of manganese, and other compounds, being of themselves oxidizable in combination, act catalytically in increasing the oxygen-absorbing power of the oil. Without this purification of the oil the manufacture of linoleum would be impossible. The addition of about one per cent. of the above oxidizing elements to the oil, and boiling for about five hours at a temperature of 350 degrees Fahr., aided by the injection of a current of air during the boiling process, evaporates the water, throws down the "mucosities," evolving in the process large quantities of the fumes of acrolein, that are not only injurious to inhale, but are corrosive to iron. The oil gains in weight during the process, being lighter than water before boiling and heavier than water after. This purified oil applied to scrim (cotton cheese-cloth) dries in twenty-four hours to a resinous, semi-elastic, caoutchouc-like mass from the rapid absorption of oxygen from the air, forming oxylinoleic acid ($C_{16}H_{26}O_5$). The accumulation of this plastic mass upon the scrim is continued until it reaches three-quarters of an inch or more in thickness, when it is ready to be incorporated by grinding it with the ground cork which makes with it the linoleum of commerce. The oil gains in weight, as applied to the scrim, from eleven to sixteen per cent., and Sace reports cases in which the gain in weight was nearly fifty per cent. after complete resinification. When the linseed oil is cold-drawn and pure, and the boiling and other processes are carefully conducted, the scrim mass is insoluble in ether, alcohol, chloroform, and carbon bisulphide; even boiling naphtha only dissolves a trace of it. Treated with naphtha under pressure in a steam kettle, it only softens, and can be worked as a paste when in this condition. The only action which dilute acids have upon it is to dissolve a small quantity of the oxide of lead used in it as a drier. Hydrochloric acid dissolves it only slowly, while concentrated sulphuric and nitric acids dissolve it rapidly.

This oxidizing change in the linseed oil, carried to a lower degree than for use in linoleum, is what we get as a vehicle or medium for our paint compounds. That the vehicle protects the pigments from decay is without question, particularly where the pigment is made from the argiliferous substances, like Spanish white (prepared chalk), Spanish brown (an earth, principally clay, like potters' clay, of a reddish-brown color, due to the sesquioxide of iron), and other inert mineral substances which are easily broken down or decomposed by moisture.

If the pigment is made from harder materials than the above substances and contains amorphous graphite, silica, barytes, ground slate, and kindred substances which are impervious to moisture, the protective qualities of the paint are then due to the mutual relations of both the oil and the pigment. The outer coating of the oil, when worn away by atmospheric conditions, exposes the finely ground, angular, and practically indestructible grains of the pigment which protect the inner layers of the oil from wear, much as sanding the coat of a freshly spread paint extends the life of the paint coating. As a rule, the poorer the paint the more need of its sand dressing. A modification of this sand dressing of paint is extensively used in all of our modern naval iron vessels, where ground cork is applied to the freshly painted surface to prevent condensation and deposit of moisture upon the walls and inside surfaces.

Mr. Boyer's citation of the freedom from corrosion of the chain suspension bridge at Newburyport, Mass., erected 104 years ago, and not painted during the past thirty years, is of interest. It shows the preservative qualities of a good linseed oil (that, no doubt, was pure) and a lampblack pigment—a combination as nearly indestructible as any paint can be. Spanish black (charred cork ground) is also a meritorious pigment for such structures. Both afford a most excellent groundwork for any subsequent paint coating where color or æsthetic effects are wanted.

The writer is pleased to add the testimony of Mr. Sabin—of national reputation as a chemist—to the deleterious and fictitious value of oxide of iron pigments applied for the prevention of corrosion to metallic structures. The compound oil, varnish gum, and asphalt coating mentioned by Mr. Sabin is one of the most durable protective coatings which can be devised for coating metallic surfaces. That it can be baked at a moderate heat into a japan or enamelled surface, firm and hard, filling every crevice, however small, of the coated surface, a coating which resists acidulous fumes and liquids, is of extreme value. An added recommendation is that a modified compound which can be applied with a brush as a paint has nearly the same protective effect as the japan quality.

The importance of an easily applied and efficient paint coating for all ferric bodies other than for first-class building, railway, and bridge structures is exemplified in many instances. At a late meeting of the American Gas Light Association Gen. J. P. Harbinson, engineer of the Hartford, Conn., Gas Light Company, reported that the wrought iron service pipes laid by that company, and in use about forty years, had in many cases completely disappeared, the service being a core of earth and rust. Other gas engineers report similar conditions under twenty years of use, and that the leakage of gas is frequently twenty-five per cent. of the quantity manufactured, the loss being principally due to corroded service pipes. The use of galvanized iron service pipes is giving somewhat better results. General Harbinson thinks twelve years a fair life for such pipes, much depending upon the nature of the soil in which the pipes are laid. Pipes laid in made soil composed of ashes, street sweepings, etc., are seriously affected in a short time, principally where the threads, cut, have exposed the metal.

Ordinary paint compounds, with which the screw joints are made, soon waste away from the acids, ammonia, etc., in the soil, and corrosion is localized and hastened.

Gen. Alfred Hickenlooper, president of the Cincinnati Gas Light and Coke Company, reports a similar condition and corrosion of service pipes in his city. He has used a special coating, devised by himself, to correct this evil. The pipes are first brushed with stiff steel brushes to remove all the mill scale possible; then the ends are plugged, and the pipes immersed in the following mixture and manner: Twenty gallons of coal-gas tar are brought up to a boiling heat for a short time to evaporate as much of the water, acids, ammonia, etc., then twenty pounds of freshly slacked lime are sifted in from the top and well worked down. Boil down to a paste or a consistency about midway between tar and pitch. Let it settle for a short time, then add four pounds of tallow and one pound of powdered resin; stir until thoroughly dissolved and incorporated with the tar, then let it cool and settle. Ladle off into barrels. When ready for use, to each barrel of forty-five gallons of the above mixture add four pounds of crude rubber dissolved in turpentine to the consistency of thick cream. Heat the mixture to about 100 degrees Fahr., and immerse the pipe, *previously heated* to about the same temperature. After a few minutes' immersion the pipes are taken out and laid upon a pipe rack to harden and dry. When the pipe is laid in the trench the screwed ends and other parts of the pipe, where the coating has been injured by handling, are served with a heavy coat of the same mixture, which is also spread over the whole length of the top of the pipe as an extra coating. These pipes, thus treated, have been in use for some ten years and are in perfect condition. The United Gas Improvement Company and other large gas companies have adopted the same method of protection for their service pipes, with apparently equally good results. The failures thus far reported show that the process was not to blame, but rather the lack of thoroughness or intelligence displayed in its application. The latter difficulty is found to exist in the use of almost all protective methods for the preservation of metallic bodies. Haste makes waste wherever "*rush the work*" is the slogan.

In connection with this subject it may be of interest to cite that the city of Philadelphia, with municipal control of the gas supply at one dollar per thousand cubic feet, from the official reports of the Gas Bureau, has lost in the past ten years $5,750,000 from leakage, and the average loss in the past five years has been at the rate of 2,000,000 cubic feet per day on this account, and at present the loss from unaccounted-for gas is $3,000 daily. A late examination of the gas system of Philadelphia by a number of the best gas engineers in the United States is to the effect that every thousand cubic feet of gas made costs the city $1.36, for which only $1 is received.

Some recent experiments to determine the difference in corrosion of wrought iron and soft steel have been made by the Riverside Iron Works, with the following results: A piece of iron plate and soft steel plate, both suitable for boiler tubes, were made clean and bright, and were then placed in a sandy loam with which had been thoroughly incorporated some sodium carbonate, sodium nitrate, ammonium chloride, and magnesium chloride. The earth thus prepared was kept moist. At the end of twenty-three days the plates were taken out, cleaned, and weighed, with these results:

Iron, loss by corrosion	0.84 per cent.
Soft steel, loss by corrosion	0.72 per cent.

The pieces were replaced in the earth and left for twenty-eight days longer, or sixty-one days in all, with these results:

Iron, total loss by corrosion	2.06 per cent.
Steel, total loss by corrosion	1.79 per cent.

Mr. Henning's description of the methods employed on the Cincinnati Suspension Bridge to prevent corrosion are well worthy of record for the information, if not for the instruction, of the coming engineer successors in the trust for the care of the structure. That all paint compounds were discarded for the use of oil alone (Mr. Henning does not say whether it was raw oil or boiled; in the latter case the writer hopes it was not of the "bung-hole boiled" variety) seems almost incredible. That the use of the iron-oxide pigments was not permitted on the structure was a commendable decision, and one in keeping with the record from past experiences of the United States Government Construction and Repair Bureaus and of other engineering departments connected with our important railway lines. But why oil alone was adopted for the protection of the metal-work is beyond conjecture.

The absorbent nature of linseed oil without pigment has been frequently mentioned in these rustless coating papers, and in the writings of the best paint chemists of the day, and need not be recapitulated.

Notwithstanding the testimony of Mr. L. L. Buck and Mr. Henning and other engineers as to the value of either raw or boiled oil without pigment for the preservation of the wire and other surfaces in the suspension bridges thus far erected in this country, the writer is still of the opinion that its use was inadmissible for the purpose, and in the lapse of years will be found as having proved actually detrimental. Had any experimental coating of oil alone been applied to a piece of wire in a number of successive coats, until a heavy coating had been obtained, and the sample then been exposed to the action of the weather in a storm of such duration as is of frequent occurrence, then by the application of a little pressure the skin of the oil would have cleaved from the metal covered as easily as the bark of the willow used to slip off when in our youthful days we used them for our whistles.

The adulterations in the oxide of iron pigments mentioned by Mr. Henning were no doubt earthy matter and clay present in the ores at the time of roasting them to drive off the sulphur and water preparatory to grinding. The analysis of these iron pigments is not a difficult or long process, and is easily performed. If adulterations are found and the sample iron pigment is condemned, the writer can see no reason therefrom to condemn all coatings or pigments, particularly with the samples of other paint compounds, and the data in regard to the same presented at the Detroit meeting, June, 1895, of this Society, and comprising a part of paper 637, Vol. XVI., pages 681–2 and 700. These show that reliable paint coatings are in the market, and can be had at a reasonable cost.

Mr. Henning thinks that the removal of the mill scale from the metallic work of our important structures is impossible, owing to the probable expense of its removal being equal, or nearly so, to the cost of building, etc. While no accurate data from actual work upon bridge or other large, first-class structures are available for a reliable statement as to the actual cost of removing mill scale, either by the pickling process or by the sand blast, or both combined, according to the size of the pieces handled, the writer's data vary from one-tenth cent to one-half cent per pound for all of the material, large and small parts, when thus cleaned and ready for the painter.

Certainly any structure of the magnitude of the Firth of Forth Cantilever Bridge, which cost over fifteen and a half million dollars, and which has a hundred and forty-five acres of exposed metallic surface subject to corrosion, and which requires nearly one hundred tons of paint to cover it one coat, is well worth some preliminary expense for the removal of an acknowledged detrimental element in the form of mill scale, as well as some effort to provide that the foundation paint coatings, laid on while under shelter and under good, warm, drying conditions, are of such character as will reasonably insure success, regardless of cost. The proposed Hudson River Suspension Bridge is of equal importance from an engineering point, and will cost even more than the Firth of Forth structure, and have about as much metallic surface exposed to corrosion.

However well protected the cables proper in the Niagara Falls and the Brooklyn Suspension Bridges are by reason of their external wrapping of wire and white-lead paint, certainly no engineer can inspect the condition of the truss-work of the Brooklyn Bridge and the inroads which corrosion is making upon the strength of the same in those portions of the trusses upon which the whole rigidity and carrying strength of the cables depend, without a regret that more effective methods of protection were not adopted in the beginning, and a hope that future constructions may be benefited by the example. The cost of renewal of these trusses in the immediate future, the delay in the traffic intercourse between the two cities, the loss of money and time by reason of this delay, may well warrant the public in closing down upon all financial aid or countenance of the project until assured that the money contributed either in the form of bonds or taxes to build these structures is at least going to receive an intelligent engineering consideration, unbiased by any fads or from any interested pecuniary standpoints.

No protective coating for these important structures should be left to the choice of a so-called master painter, nor receive any consideration from the bridge engineers, in their specifications for painting them, from any paint manufacturer who is unwilling to file with his proposals a full analysis of his pigments, oil, or the combined and mixed coating proposed. The alleged trade secrets in the preparation of most of the protective coatings of commerce are few and far between, and such scare-line prefixes as "Permanent," "Petrifying," "Platina," "Diamond," "Electric," "Scale Armor," etc., etc., paints are only unjustifiable advertisements.

Mention has been made in a previous paper (Vol. XVI., paper 637, p. 684) that the Society for the Promotion of Useful Arts, Berlin, Germany, had offered a silver medal and a cash prize of £150 for the best paper giving a chemical and physical analysis of the iron oxide and other paints in general use for anti-corrosive purposes, and the hope was expressed that some definite conclusion or formulæ might result from the varied data and wide competition papers and the discussions had upon them. But the medal and cash prize were withdrawn, none of the papers presented being deemed of merit enough to warrant their issue; but from the papers presented a few were selected for *honorable mention*. Among these is the essay by J. Spennrath, Director of the Technical School at Aix-la-Chapelle, translated and published by the *Railroad Car Journal* of New York, 1896, which will be found of interest to all engineers who have metallic surfaces to paint, if not to protect from corrosion. As a sequence to the agitation of the rustless coating question, anti-corrosive compounds and communications have been showered upon the writer for the last two years. Out of all these there are two which are deemed worthy of record, and these have not been experimented upon by the writer.

"Uniter" is the name of a new transparent solution for coating galvanized iron preparatory to its being painted. When the paint is applied after the "uniter" has been put on, it adheres permanently, and is said not to peel off, as is usually the case. The reason which is given for this is the strong affinity which the solution has for both paint and zinc. The application of the solution it is claimed does not in any way cause deterioration in the zinc and all oxidation is prevented. The solution may also be used on black sheet-iron, bridge-work, bright iron-work, locomotive and other constructional iron-work. The analysis of the solution is not given.

A new process for the protection of iron structures against corrosion has been suggested by a German chemist, M. Deninger, of Dresden. It consists of treating the iron with a solution of ferrocyanide, which forms a coating of cyanide of iron uniform and impermeable to water, and is of such a nature as to protect effectively the iron covered. The solution applied on a large scale is reported to have already given good results. The method of application is as follows:

The solution is mixed with a linseed varnish (proportions not given), to which has been added a little turpentine or benzol, so as to cause a homogeneous emulsion which can be applied with a brush or mop without difficulty. The evaporation of the solvent leaves the varnish, which forms a coat protecting the cyanide of iron which is deposited upon the metal. There is no necessity for previously preparing the iron to be coated in any way beyond the removing of the beds of rust which are too thick to admit of the action of the ferrocyanide. Oil paints are applied over this coating in such colors as are desired, and bond well with the protective coating of varnish without any tendency to peel off.

Dr. Dudley, chemist for the supply department of the Pennsylvania Railway, and other paint chemists, speak very favorably of the use of the P. & B. brand of paint for applying to galvanized-iron surfaces to prevent the peeling of the subsequent paint coatings. Its solvent is the bisulphide of carbon, an extremely dangerous substance to use from its inflammable nature; the fumes given off in drying are also injurious to the workman, and if inhaled for a short time in a confined space produce paralysis, insanity, and even death. There are other paint or solution compounds which are equally effective to prevent peeling that are not dangerous to use.

A late communication has been received from Mr. Emil Gerber (member A. S. C. E.) relative to his paper presented at the May meeting, 1895, of that Society, " Preservation of Iron Structures Exposed to Weather," and mentioned in the writer's paper 637, Vol. XVI. (June, 1895), pp. 686–688, in which iron-oxide paints were compared with red lead or other paint compounds as to their respective protective powers against corrosion. Mr. Gerber objects as to the inferences drawn as to the meaning of his words "exposed to air," which the writer rendered " sea air," and he (Gerber) wished it corrected, as per his letter of December 26, 1896, " that he did not distinctly say 'sea water' nor 'sea air,' " a correction which I gladly make, as the structures in question are evidently in need of some fostering care to extend their life to a reasonable age, even to the extent of taking them in out of the wet and only permitting their use in fair weather.

Mr. Gerber thinks the word "often" should be prefixed to "unknown," as used in reference to his paper in a comparison of the qualities of iron oxide and red lead as to the purity *per se* of the two pigments. Now the substances commonly used to adulterate red lead are boles or brickdust for color, and heavy spar or barytes to give weight, both practically indestructible and unchanged in nature by the addition of any oil or solvent in the medium, and but limited amounts of these can be added without seriously affecting both the weight and color of the pure red lead, and are easily detected. The difficulty and cost of grinding the hard burnt brick and barytes to the requisite degree of fineness for a pigment prevent any liberal use of these adulterants. Any number of pounds or samples of dry red-lead pigment will, as a rule, contain less impurities than a like number of pounds and samples of the commercial oxide of iron pigments, in which the range of stuffing comprises almost every substance between a chalk cliff and an anvil.

Mr. Gerber's criticism upon the effects of the corrosion in the steamer *Glenarm*, in the face of Mr. Courtney's (chemist) analysis and statement of the cause of the corrosion, is rather a lame attempt of an iron-oxide advocate to get over or around a dangerous snag. The writer was in hopes to have had an analysis, to present in this paper, of the crude burnt-ore pigment in question, with a statement from Mr. Courtney as to what extent this burnt ore is used for pigments or paint purposes, but will endeavor to present it at a future meeting; also, if possible, an analysis or description of the paint coating used on the engine work which withstood the concentrated action of the sea water and iron oxide ore solution. The writer has no doubt but that the paint used upon the engine ironwork which protected it from corrosion was the same burnt-ore oxide pigment used with a good linseed oil. In this case the oil protected the pigment perfectly, as is not unusual. In fact, if we know the influences to which a paint coating is to be subjected, we may determine in advance whether it will be durable or not. The pigments of an oil paint can always be so chosen as to preclude the destruction by them of the coating, but there is no remedy if any injurious influences attack the binding material.

Mr. Gerber mentions the iron floor beams taken out of the old Chicago post-office, which is at least of age (whatever that may mean), and which had been religiously painted (creed of the painters not stated) with red lead *after* first having received a coat of iron oxide (presumably from an unorthodox brush). These beams were in a pretty good condition, and in the best condition where the most oxide of iron was present in the shape of paint.

Under normal conditions attendant on their use in a building maintained at an approximately equal temperature for the whole period of their age, without exposure to weather or any atmospheric changes, they should have been in not only pretty good condition, but most excellent, and instead of a measured life of fifty or one hundred years, should be in prime order at the end of five hundred or more years. The iron-oxide paint in this case no doubt protected the mill scale from any moisture, and the red-lead coating protected the iron-oxide paint from the same destructive element, and, as it were, had a double duty to perform. The beams no doubt would have been in better condition if no iron-oxide coating had been applied, and both coatings been made from the red lead even if applied over the mill scale.

DCCXIV.*

STEAM-ENGINE GOVERNORS.

BY FRANK H. BALL, PLAINFIELD, N. J.
(Member of the Society.)

WHATEVER may have been true at any stage of the development of the steam-engine governor, it can no longer be said that little or nothing has been accomplished since the time of Watt. In fact, when the perfected mechanism of to-day is compared with the primitive device of Watt (which did little more than to limit the maximum speed), it is doubtful if any other part of the steam engine has made more progress.

The original conception of a governor seems to have been the familiar type of mechanism in which a pair of swinging weights are made to revolve around a vertical spindle in such a manner that their centrifugal force is opposed by gravity, any excess of either force resulting in a swing of the weights toward the greater force, thereby effecting a corresponding change of the steam supply by means of suitable connections.

The governing forces of this simple mechanism consist of centrifugal force opposed by gravity. Familiar modifications of this construction are provided with springs as a substitute for gravity, or to supplement it in producing centripetal force. Shaft governors, or shifting eccentric governors, represent another type where springs are used to oppose centrifugal force, and the introduction of this class of governors initiated an era of active development which has resulted in marvellous progress toward perfection, both in design and performance.

It is noticeable, in reviewing this art, that among all the varied forms of governors which have from time to time made their appearance, none have survived for any extended period which did not utilize centrifugal force as a prominent actuating force.

---

* Presented at the New York meeting (December, 1896) of the American Society of Mechanical Engineers, and forming part of Volume XVIII. of the *Transactions*.

The resistance of fluids as a substitute for centrifugal force is one of the systems which have been "weighed in the balance and found wanting."

Another interesting theory which was exploited in connection with shaft governors, but never passed beyond the theoretical stage, is the substitution of the resistance of the load, or the pull of the belt, for centrifugal force in controlling the steam supply.

A modification of this dynamometrical device appeared in 1883, in which it was combined with a powerful centrifugal governor and made to act in conjunction with centrifugal force, and remarkable results were thus obtained, which, in some respects, have never been surpassed.

Simpler devices have since been developed in which centrifugal force is supplemented by other accelerating forces, commonly called "inertia," and the more complicated dynamometrical construction has been superseded; but it must ever be considered the first important step toward the modern refinement of performance.

Recent activity in this field of engineering has been in the direction of the recognition and utilization of accelerating forces other than that known as centrifugal force. An early attempt in this direction is found in the Patent Office records for 1875, in the work of Mr. A. Kendall.

The Kendall construction is illustrated in Fig. 88, in which *A* is the governor frame, fixed to the shaft *B*. Mounted loosely on this shaft is the so-called "inertia wheel" *C*, which by means of links is connected to the centrifugally acting weights *D*, the latter being pivoted to the governor frame and wheel and at *E*. The acceleration of this wheel resulting from a change of speed of rotation, develops a force which acts on the weights *D*. This construction never came largely into use, because the application of the principle was mechanically crude and clumsy, and the refinements sought to be obtained were lost in excessive friction.

For nearly twenty years after this work of Kendall no practical results seem to have been accomplished in the use of this accelerating force; and although the Patent Office reports contain several patents for mechanisms looking to that end, no considerable application seems to have been made in practice until within the last three or four years, during which time

Prof. R. C. Carpenter, Mr. J. Begtrup, Mr. F. M. Rites, and others have developed practical devices for utilizing accelerating forces which are extensively used.

A history of this development would not be complete without mention of a paper on the subject presented to this Society at the New York meeting of 1892 by Mr. F. M. Rites, member of the Society. This paper is perhaps the first publication in which the several accelerating forces are analyzed and classified; therefore it attracted considerable attention from our leading engineers, although those most interested had cause for regret that Mr. Rites's discussion of the subject and his mathematics did not seem to lead to any very practical results.

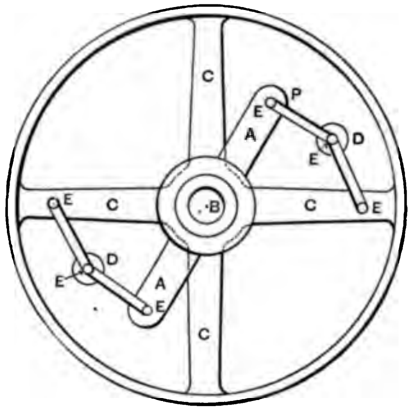

FIG. 88.

Inasmuch as it is the object of this paper to investigate these accelerating forces from a practical standpoint with the hope of stimulating general discussion by the Society, it will be best to start with a clear understanding of what we are talking about, which can best be done by illustrating each of the forces and agreeing as to what we shall call it.

Let Fig. 89 represent a governor wheel or disk fixed on a shaft S, with which it rotates. Let M represent a mass pivoted at P by a connecting arm. The rotation of the wheel in either direction will cause the mass M to move outward, because its inertia resists the circular path or the radial acceleration, and this accelerating force is familiarly known as *centrifugal force.*

Referring now to Fig. 90, let the same mass M be considered

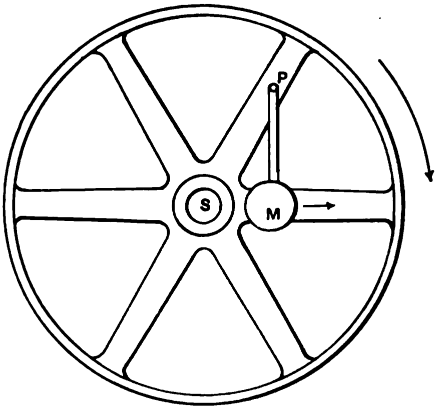

Fig. 89.

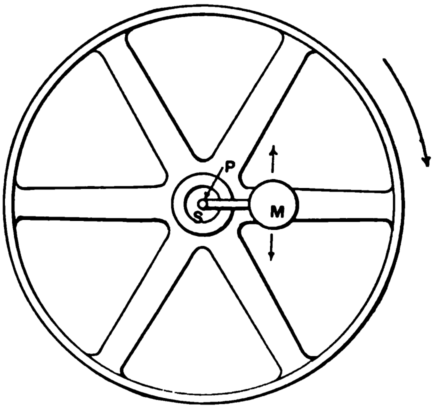

Fig. 90.

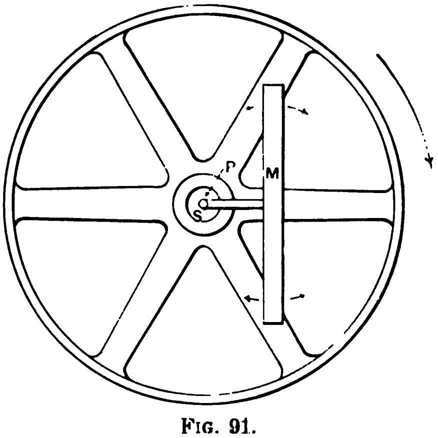

Fig. 91.

as pivoted on the shaft by a connecting arm, and free to revolve around the shaft. Centrifugal force in this case is directly resisted by the pivot, and therefore produces no motion of the mass about the pivot. Any change in the rate of rotation of the wheel, however, will not be participated in by the mass M without a force developed in the direction of the arrows, because of the inertia of the mass M, and this force we will call *tangential accelerating force*, which corresponds with what Mr. Rites has called "tangential inertia."

Assuming the mass M to be concentrated at its centre of gravity and the arm to have no weight, then in Fig. 90 the only accelerating force capable of producing motion of this mass around the pivot is what we have called *tangential accelerating force*.

Fig. 91 is supposed to represent the same wheel shown in Figs. 89 and 90, with a mass M equal to the mass M in Figs. 89 and 90 and pivoted as in Fig. 90; but the mass, instead of being concentrated at its centre of gravity, is assumed to be distributed in the form of a bar as shown, with its centre of gravity remaining as in Fig. 90. This construction, like Fig. 90, carries the centrifugal force on the pivot without producing rotation about it, and, like Fig. 90, *tangential accelerating force* is a prominent force to produce pivotal rotation.

Another accelerating force appears in the construction of Fig. 91, to which Mr. Rites has called special attention in his paper referred to, and which he calls "angular inertia," but which is perhaps better described by the term *angular accelerating force*, because inertia does not seem to be an appropriate name for a force.

The magnitude of this force depends on the distribution of the mass M with relation to its centre of gravity. Under the assumed condition of this mass M in Figs. 89 and 90 no *angular* acceleration appears, but in Fig. 91 it becomes a pronounced force, and may be described as the effect of the angular acceleration of the mass about its own centre of gravity.

To make this perfectly clear refer to Figs. 92, 93, and 94. Each of these figures is assumed to represent the same wheel shown in Fig. 91, and the same mass M pivoted as in Fig. 91.

Rotation of the wheel and mass M in the direction indicated would result in the successive positions of the mass M that are shown, and it will be seen that, while rotating around the shaft S, it also rotates around its centre of gravity.

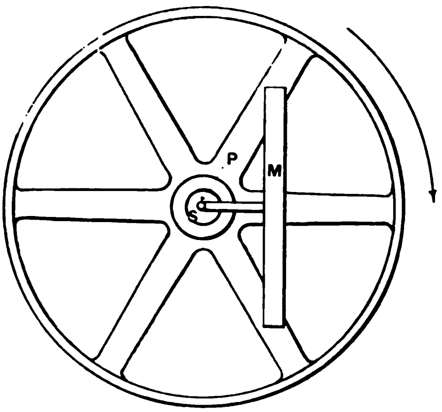

FIG. 92.

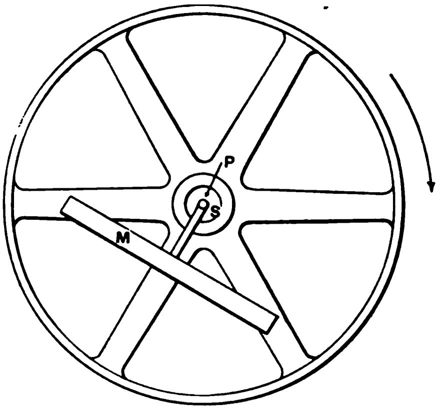

FIG. 93.

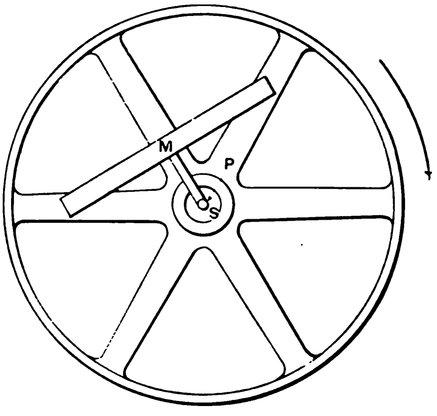

FIG. 94.

To illustrate this further, suppose the bar or mass M is pivoted at its centre of gravity G (Figs. 95, 96, and 97). Rotation of the wheel and mass may now take place without rotation of the mass around its centre of gravity.

Figs. 95, 96, and 97 represent such a condition, because it will be seen that the bar remains in a vertical position, while its centre of gravity rotates with the wheel around the shaft S.

Comparing Figs. 92, 93, and 94 with Figs. 95, 96, and 97, it will be seen that the pivoted bar of the latter does not necessarily have angular rotation about its centre of gravity, while the former necessarily has it, and for each complete rotation of the wheel the bar has passed through 360 degrees of rotation around its own centre of gravity.

A familiar illustration of the same idea is found in the relation of the moon to the earth, the latter rotating once on its axis while completing its passage once around the earth in its orbit, which causes the same side of the moon to be continually toward the earth; whereas, if the moon had no axial rotation its entire surface would be successively exposed to our view as it passes around the earth.

From the foregoing it is clear that three accelerating forces are available as actuating forces in a governor. The most important, because of its being absolutely indispensable, is centrifugal accelerating force, or centrifugal force. Either or both of the other two may be utilized as governing forces, or they may be inoperative, or may actively oppose the governing motion, and thus become an obstruction. To assist in governing, they must act *with* centrifugal force during an increase of the rate of rotation, and *oppose* centrifugal force when rotation is decreased.

The three accelerating forces we have been considering may each be developed by a separate moving part, or all three may appear in a single moving part. The latter plan is looked upon with most favor because of its simplicity and fewness of parts.

A study of these forces with regard to their practical utility and possible limitations of usefulness is best made by first investigating them separately, and then as a combined force developed from a single moving part.

Beginning with centrifugal force as the one always present in every form of governor, the radial distance from the centre of gravity of the moving part to the centre of rotation determines

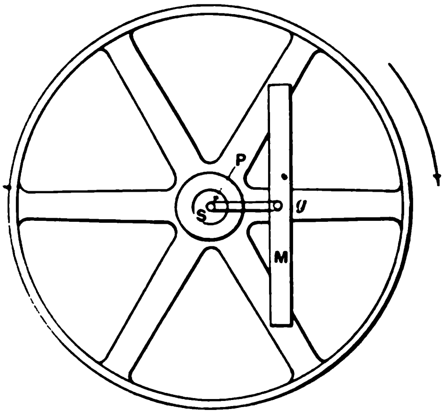

FIG. 95.

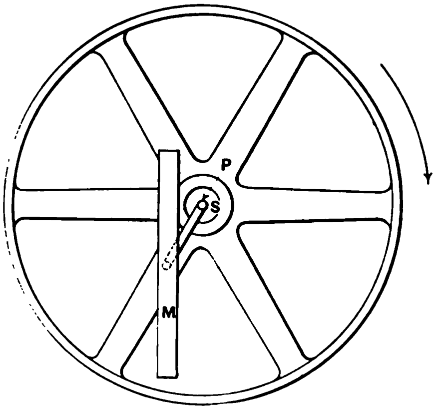

FIG. 96.

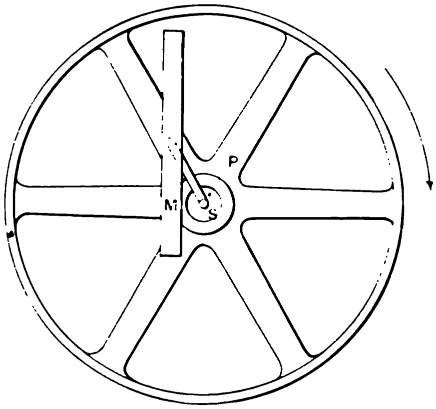

FIG. 97.

the amount of force developed at any given speed of rotation with a given mass.

Looking at this feature alone it would seem dersirable to locate the centrifugally acting mass as far from the centre of rotation as possible, so as to reduce the mass and the consequent gravity disturbance to a minimum. The question of centrifugal force, however, and particularly the problem of initial tension of the springs, presents practically insurmountable difficulties that limit the radius of the centre of gravity of the centrifugally acting mass to a comparatively short one.

It is not considered necessary in this paper to go extensively into the question of the relation of the initial tension of governor springs to the initial radius of the swinging centrifugal mass, as the theory is now well understood by engineers conversant with the art.

It is well known that what is called isochronism is only possible when the centripetally acting springs are adjusted to full theoretical initial tension; or, in other words, when the distance of initial stretch of the springs corresponds to the initial radius of the centrifugally acting weight or mass. The possibility of this theoretical adjustment in practice will not here be discussed; but for the purpose of this paper it is sufficient to say, that even where an approximation to theoretical tension is used the spring problem is made very difficult, unless the initial position of the centrifugally acting mass is comparatively near the centre of rotation.

Leaving now for the present the consideration of centrifugal and centripetal forces, and taking up the accelerating force which we have called *tangential accelerating force*, we are again dealing with the centre of gravity of the movable mass, and the magnitude of the force depends on the rate of acceleration. It makes no difference whether a given rate of acceleration is due to moderate change of rotation and a considerable radius or rapid change of rotation and a less radius.

The effect of tangential acceleration is felt along a line that is tangent to the circular path, and is therefore at right angles to the radius. The turning moment around the pivot of the movable mass depends on the location of the pivot, and is therefore maximum when the pivot is on the radial line as in Fig. 90, and zero when on the tangent as in Fig. 89.

In intermediate positions the force is measured by the arm drawn through the pivot at right angles to the line of force which passes through the centre of gravity. It has already been said that the location of the pivot in Fig. 89 prevents tangential acceleration from producing any turning moment about the pivot, and in Fig. 90 centrifugal force is also inoperative for this purpose; so that if both these forces are to contribute to the turning of the weight around the pivot, it cannot be located in either of the positions shown, nor in opposite positions, and for the purpose of this investigation we will assume it to be located between the pivots of Figs. 89 and 90; so that both the forces under consideration produce turning moments around the pivot, the arm of each force being the distance from the pivot to the line of force measured at right angles to that line. The investigation of this subject so far may have seemed rather elementary, but it has been done to prepare for a further consideration of the problem on lines that do not seem to have been as fully investigated heretofore as the importance of the subject demands.

In our investigation of the effect of tangential acceleration so far, we have followed the beaten track, and have only considered the effect produced by a change of the rate of rotation of the wheel to which the movable mass is pivoted. It is not enough, however, to recognize and measure the forces that contribute to the *initial* actuation of the governing mass. It is quite as important to know what effect the *motion* of this mass has on these forces; also whether any other forces are developed by this motion that disturb the nicely poised condition of equilibrium between the centrifugal and centripetal forces.

This equilibrium has already been referred to as due to the adjustment of the centripetally acting springs to the full theoretical initial tension, and when so adjusted the change of centrifugal force due to a change of the radius of rotation is just balanced by the corresponding change in the resistance of the spring.

This theoretical equilibrium of adjustment, however, is based on the assumption that centrifugal force varies directly as the radius of rotation, which is a well-established law with regard to any fixed radius, but during the period of change of radius the law does not apply. To fully understand this, it must be borne in mind that centrifugal force of a circular path is that force which is necessary to radially accelerate the mass from the tangent into the circular path, and any change of radius modifies this radial acceleration, so that during the period of change the radial acceleration is not that due to its radial position; therefore centrifugal force may be greatly increased or decreased by a rapid change of radius; and, in fact, a rapid increase of radius may result momentarily in a path corresponding to a tangent, during which time centrifugal force would become zero.

The possibility of such an important modification of the forces only emphasizes the necessity of including in the governor problem all the forces developed by the pivotal swing of the governing mass.

One of these has just been described as a momentary modification of centrifugal force during the period of radial motion. Another and a very important force that appears during the period of radial motion is that due to the very great change of linear velocity that necessarily follows a change in the *radius* of rotation, either with or without a change in the *rate* of rotation, and which develops an accelerating force acting on a tangent to the axis of rotation, and in unison with whatever tangential acceleration force may have been developed by a change in the *rate* of rotation.

These forces were recognized to some extent at least by Mr. Armstrong in his paper presented to this Society at its Cincinnati meeting in May, 1890, in which paper he suggested locating the pivot as shown in Fig. 98, the proposed object of this arrangement being to produce the effect of a dash-pot during the period of motion.

Referring to Fig. 98 it will be seen that the direction of tangential accelerating force is not on a line passing through the pivot, and it therefore produces a turning moment about the pivot, and, as we have seen on the preceding pages, other modifications of the governing forces necessarily follow.

A review of these forces may be made as follows:

First. In view of the direction of rotation indicated, any change of the *rate* of rotation will develop a tangential accelerating force in opposition to the change of centrifugal force, and therefore in opposition to the desired motion.

Second. To simplify the investigation we will only consider the effect produced by an *increase* in the rate of rotation, it being understood that a reverse process of reasoning applies to a *de-*

crease of the rate of rotation. Assuming now that the accumulation of unbalanced centrifugal force due to increase of rotation has overcome the opposing tangential accelerating force, and an outward motion of the centrifugally acting mass begins, the immediate effect of such motion is to develop a great increase of opposing tangential accelerating force, not only because of the normal increase of velocity necessary to an increasing radius, but because the path of the weight is in advance of the radial line, thereby still further increasing its linear acceleration. It is true that this advancing path increases the centrifugal force also, and to that extent neutralizes the increased opposing tangential accelerating force. The net result of these forces may be summarized as follows:

Centrifugal force depends entirely on the *rate of rotation*, without any regard to the *rate of change of rotation*. *Tangential accelerating force* depends entirely on the *rate of change of rotation*, without any regard to the *rate of rotation*, and becomes zero whenever rotation becomes constant at any rate, while centrifugal force is never zero at any rate of rotation.

Reviewing then, it will be seen that the arrangement suggested by Mr. Armstrong is faulty, because the desired dashpot effect is obtained by a location of the pivot which is unfavorable to prompt motion for the evident reason that with every change of rate of rotation the desired motion of the governing mass is opposed by its tangential accelerating force.

In the investigation of this subject by Mr. Armstrong he describes the probable effect of shifting the location of pivot with relation to the direction of rotation as shown in Fig. 99; and his description of the violent slamming of the weights, while true under certain conditions, is anything but true under other conditions; and it is evident that in Mr. Armstrong's investigations he did not fully recognize all the forces which are developed in a governor.

Referring again to Fig. 99, and applying the reasoning of the preceding pages, we find that with an increased rate of rotation centrifugal force is supplemented by tangential accelerating force as an initial moving force. It is true also that when motion begins the increasing radius of rotation develops a strong tangential accelerating force, tending to throw the moving mass violently to the outer position; but the path of this motion being behind the radial line the actual rate of rota-

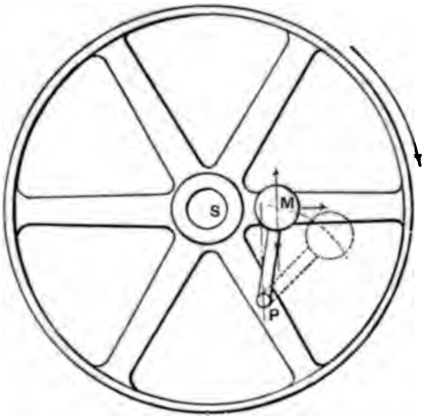

FIG. 98.

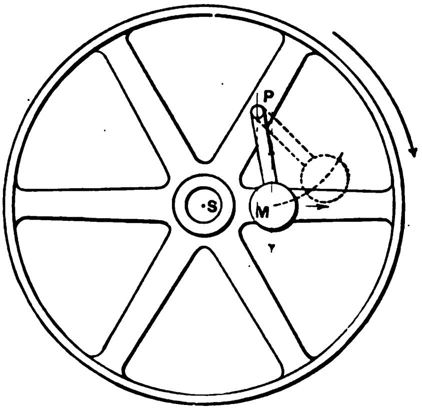

FIG. 99.

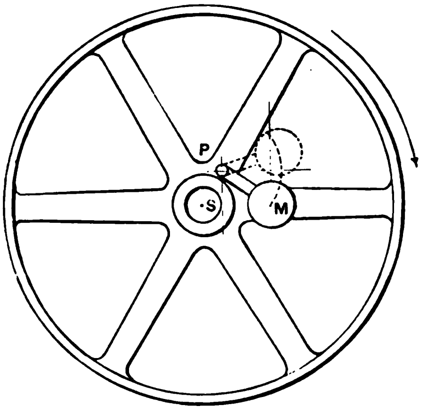

FIG. 100.

tion is modified by the motion of the mass, and consequently its centrifugal force, and the more the outward path of the governing mass falls behind the radial line the greater will be the loss of centrifugal force by a given rate of swing of the mass, and therefore the rate of swing may thus be limited very much as it is limited by a dash-pot.

Fig. 100 illustrates a location of pivot which insures a strong dash-pot effect on the swing of the weight, and all the accelerating forces act in harmony with centrifugal force. Comparing this with Fig. 99 it is evident that a path of motion falling slightly back of the radial line permits too rapid a swing of the weights, but when diverging rapidly from the radial line stability is obtained by holding in check the swing of the weight.

This condition reminds one of the German's idea of the utility of lager beer, which he expressed by saying, that "*Enough beer* is *no good*, but *too much* is *just right*."

From the foregoing it is evident that tangential accelerating force is a desirable governing force only when the outward path of the swinging mass falls rapidly back from the radial line. When so arranged, however, the length of the arm on which centrifugal force acts to produce a turning moment around the pivot is rapidly changed by the swinging of the mass, and as it shortens with the outward motion the problem of initial tension of the springs is made very difficult, and in fact almost impracticable of application. It is very questionable, therefore, whether tangential accelerating force is a practical force in the ordinary forms of governor construction, and particularly so where one end of the spring is fastened to a stationary part of the rotating wheel.

If two symmetrically swinging weights are used and their centres of gravity are connected by a spring, the force is not transmitted through the pivot, but being carried directly by the spring no centrifugal arm need be considered, and this difficulty is then not encountered.

Leaving now for the present the consideration of tangential accelerating force, and taking up the investigation of angular accelerating force, we do not find any conflicting forces that limit its usefulness. It may therefore be advantageously introduced into the governor problem to any extent consistent with constructional limitations.

GENERAL CONCLUSION.

If the reasoning of the foregoing pages is correct, the following conclusions must be accepted:

First. Centrifugal force is the most important governing force, because it is indispensable.

Second. Angular accelerating force is next in importance, because it is an unqualified help as an actuating force, and its practical usefulness is limited only by constructional considerations.

Third. Tangential accelerating force is of questionable utility, because of the disturbing forces that it is almost sure to put into operation.

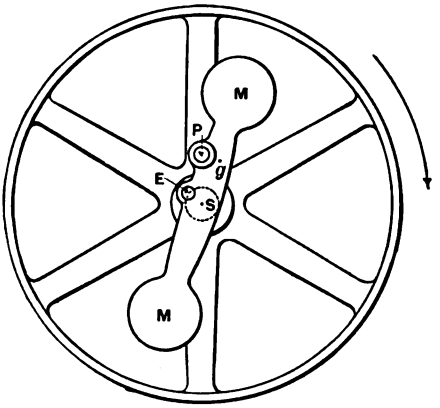

FIG. 101.

Having investigated the several governing forces and their relations to each other, the question of their practical application naturally follows. The advantages of developing all the forces in a single moving piece have already been referred to, and probably will not be questioned. Fig. 101 represents a governor wheel in which is pivoted a mass *M*, so as to be acted upon by centrifugal force and by angular accelerating force, and it may or may not be actuated by tangential accelerating force according to the location of the centre of gravity. If the centre of gravity is located at *G*, tangential accelerating force is inoperative to produce pivotal motion.

Angular accelerating force is a prominent force because of

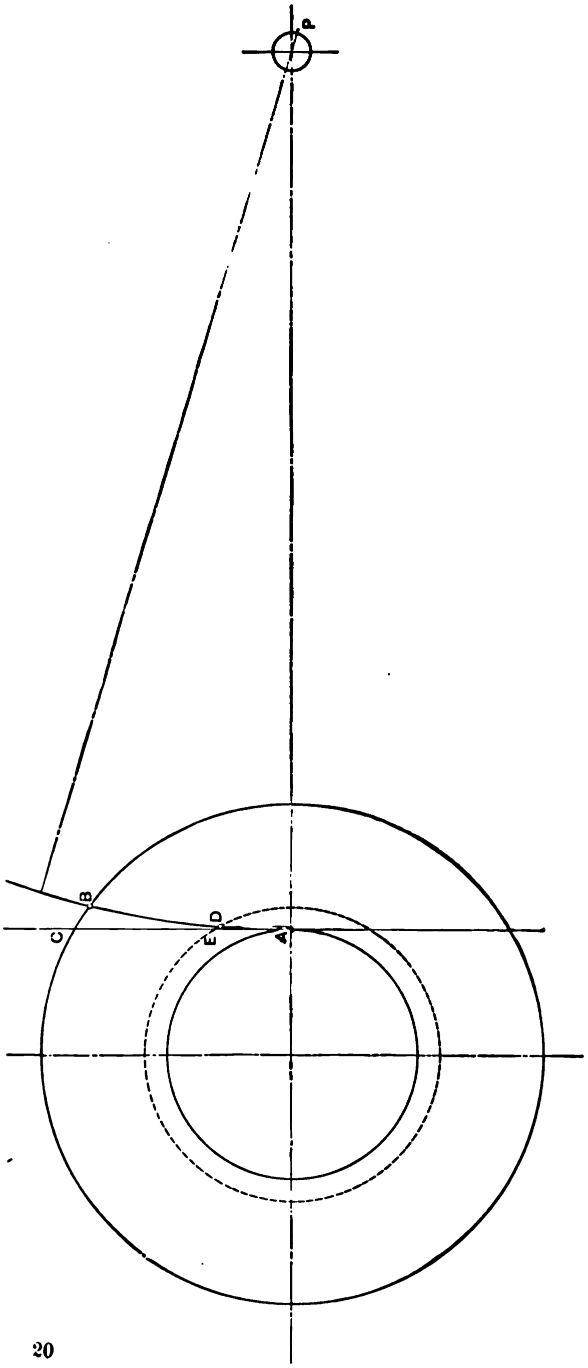

FIG. 102.

the distribution of the mass relatively to its centre of gravity, and with the direction of rotation indicated it supplements centrifugal force in producing rotation about the pivot. It is possible also, with the construction shown in Fig. 101, to attach to this single moving part the stud or eccentric which actuates the valve, in which case it must necessarily be located between the shaft *S* and the pivot *P*, as at *E*.

A centripetally acting spring attached to this pivoted mass completes the governor, which is certainly a model of simplicity. Unfortunately, however, the location of the pivot with relation to the eccentric stud *E* and shaft *S* is not such as to give the most desirable steam distribution, although it accomplishes the function of governing.

Referring to Fig. 102, let the larger circle represent the path of the eccentric or stud when cutting off at three-quarter stroke, and let the smaller circle represent the path when cutting off at zero. Let the line *AC* be the path of motion which results in shifting from zero cut-off to three-quarter cut-off, without any lead. Let *B* be the location of stud necessary to the desired amount of lead, then the path of motion will be from *B* to *A*.

With the pivot at *P* the path from *B* to *A* will be the arc of a circle whose centre is at *P*, and it is the effect of this arc that will here be investigated.

First let it be borne in mind that with single-valve automatic engines, and particularly with high speed, it is not possible to get an indicator diagram with a good steam line without a certain amount of lead, or port opening when the crank is on the centre. In Fig. 102 the distance from *C* to *B* represents the lead. It must also be borne in mind that zero cut-off cannot be obtained unless the line *BA* joins the smaller circle at *A*. Therefore the point *B* is fixed by the necessities of the case, and also the point *A*. Between the points the line may be straight or may curve on either side of a straight line.

In Fig. 102, because of the location of the pivot *P*, the line *BA* curves toward *E*, but in Fig. 103, because of the change of location of pivot *P*, the line *BA* curves away from *E*; therefore in Fig. 103 the lead at the points of cut-off between zero and three-quarter stroke will be greater than that in Fig. 102. Both these diagrams represent an example taken from practice, and both examples are taken from a valve gear with 4-inch valve

Mr. E. J. Armstrong.—Mr. Ball refers to "a very important force which appears during the period of radial motion, due to the very great change of linear velocity which necessarily follows a change in the radius of rotation, either with or without a change in the rate of rotation, and which develops an accelerating force acting on a tangent to the axis of rotation."

The writer was probably the original promoter of the force in question, and Prof. J. F. Klein was the discoverer of the fact that it is not available for governing. It seems that the movement of the weight develops several forces, the resultant of which passes exactly through the pivot of the weight; hence it has no effect upon the movement of the weight, unless by producing greater friction in the pivot; that it acts in this direction is rather hard to understand, and still harder to explain clearly. It is a good deal easier (and more conclusive) to quote Professor Klein as authority, than to attempt a demonstration. The problem comes under what the advanced text books call "Carioli's Law," discovered some sixty years ago. In the paper presented to the Cincinnati meeting by the writer, and referred to by Mr. Ball, this law is not correctly stated, and that portion of the paper is wholly in error.

It is some poor comfort that so many engineers have discussed the paper in question, as Mr. Ball has just now done, without discovering that it was founded entirely upon a misconception.

*Mr. F. H. Ball.**—Mr. Halsey has referred to the Shive governor as being an earlier application of the so-called inertia forces in governor design than the work of Mr. Kendall. I do not think anybody will question his statement, as most of us can remember the Shive governor, and are familiar with its history. I did not intend to claim that Kendall was the first to recognize inertia in governor work, but as my investigation of the subject is confined to the type of governors known as shaft governors, I merely spoke of Kendall's work as being an early example of an attempt to utilize the forces due to inertia, and I did not say that he was the first even with shaft governors. I am glad Mr. Halsey has referred to Professor Sweet's governor. I was not aware that his work (which we have all admired so much) had reached its present state of perfection so early. It is far from my intention to belittle in the least the excellent work which Professor Sweet

---

* Author's closure, under the Rules.

tribution, and the more expensive construction of Fig. 104 with its better steam distribution. This comparison has been made with both mechanisms in position for cutting off at quarter stroke, but at earlier points of cut-off the difference is still more noticeable.

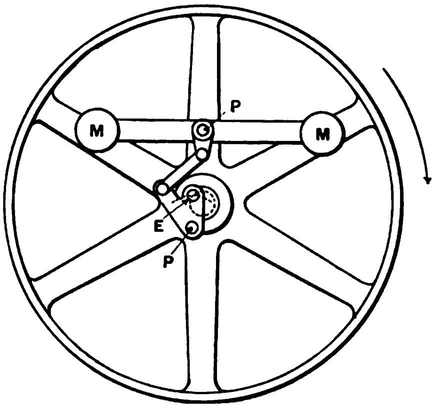

FIG. 104.

In view of the fact that single-valve automatic cut-off engines are at best rather faulty because of the wire-drawing of steam through contracted valve openings at early points of cut-off, any arrangement which adds 30 per cent. to the opening for steam is a matter of too great importance to be neglected, even for the sake of considerable saving of cost.

DISCUSSION.

Mr. F. A. Halsey.—Mr. Ball having gone into the history of inertia governors to a certain extent, it seems proper to call attention to a governor—the Shive—which is unmistakably of that type and which was placed on the market as early as or earlier than the date given by Mr. Ball as belonging to the patent of the first inertia governor. This governor made its appearance in the early 70's, was still in frequent use in Philadelphia five years ago, and probably is yet. It was a regular article of manufacture and was apparently made in considerable numbers, which in the apportionment of credit places it far above any mere scheme or idea which never got beyond the patent office.

This governor was a throttling governor intended to be placed in the steam pipe and to be driven by a belt in the manner usual with such governors. The illustrations (Figs. 105 and 106) will show the arrangement of the balls. In side view there is no departure from the usual arrangement, but the plan will show that the balls are hung from a cross-piece attached to the spindle, in consequence of which their planes of oscillation do not, as usual, pass through the centre of the spindle, but are parallel to it. A moment's reflection will show that if the governor turn in the direction of the arrow, a true inertia action will be developed, the lagging back of the balls in case the speed of the spindle be accelerated, acting to raise the balls to a higher plane of rotation, and vice versa in case the speed of the spindle be retarded.

FIG. 105.

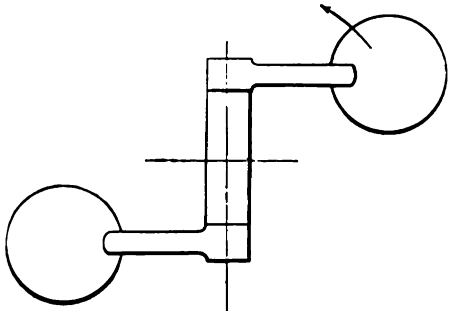

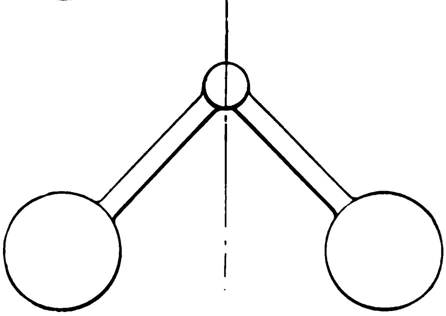

FIG. 106.

Governors have been a plaything among inventors, and it might be fairly objected that this arrangement of the balls may have been a mere freak, giving no proof of being an intelligent application of the inertia principle, were it not for the existence of an arrow which was stamped on the spindle to show the direction of rotation. It will be observed that if the rotation be opposite to the arrow in the figure, the action of the inertia force will

DCCXV.*

THE MOMENT OF RESISTANCE.

BY C. V. KERR, CHICAGO, ILL.
(Member of the Society.)

CRITICISM has lately been made through the technical press on the practice of certain firms engaged in the manufacture of structural steel in calling $\frac{I}{n} = R$ the moment of resistance, instead of $\frac{fI}{n}$, where f is the extreme fibre stress, I is the moment of inertia, and n is the distance from the neutral axis to the extreme fibre. The two expressions are identical when f is made unity; that is, when the stress in the extreme fibre is assumed to be one pound per square inch. Hence the criticism covers simply the propriety of inserting the factor f in all cases. Unwin and Reuleaux call the expression $\frac{I}{n}$ the "section modulus."

The confusion existing among engineers and architects in the use of these terms, and furnishing the occasion for the criticism referred to above, is perhaps due quite as much to the improper use of the "moment of inertia" as to the "moment of resistance." About two centuries ago Huyghens isolated the expression Σmr^2, which is now generally called the moment of inertia in solving the problem of finding the centre of oscillation of a compound pendulum. He did not, however, name his mathematical offspring, and it remained for Euler, nearly a century later, to christen it "moment of inertia." Under this name it still appears in our engineering literature; and being first in the field of mechanics, it chooses to stand in the way of the term "moment of resistance," which came in with the study of the strength of beams. Inertia is a property of matter enabling it

---

* Presented at the New York meeting, December, 1896, of the American Society of Mechanical Engineers, and forming part of Volume XVIII. of the *Transactions.*

to resist a change of state, whether of rest or of motion; and while it may not be a force it certainly measures or takes the place of a force when resisting the action of a force. Now, a fly-wheel has a true moment of inertia because the inertia of the wheel opposes the tendency to change the rate of rotation of the engine shaft due to variation in load, and it can be measured as the moment of a force in inch-pounds. But when we use the moment of inertia in the case of a beam or the top chord of a truss bridge, where a change of state with respect to rest or motion is certainly not desired, we are calling things by the wrong name. We deal with internal stress as opposed to external force in our study of the strength of beams, and not with the inertia of the material.

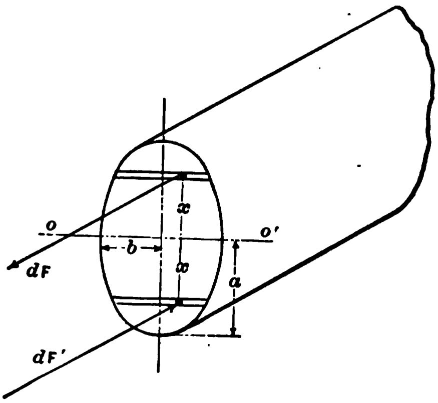

FIG. 107.

A way out of the difficulty could be found in associating the "resisting moment," as proposed by some and used by others, with the established "bending moment," and in tabulating, for the use of engineers and architects, the values of *R*, as found directly by analytical or graphical methods from a given section of beam, in terms of stress and dimensions, or numerically when either the safe working stress in extreme fibre or unit stress at unit distance from the neutral axis is assumed and stated.

In order that this paper may not fall short of the possibility of doing something useful, two methods are offered for determining the resisting moment directly from the cross section of a given beam. The analytical method is limited to the regular geometrical forms, while the graphical applies to any given section. Both methods assume that the stress varies directly as the distance from the neutral axis in the centre of gravity of section, that the material is homogeneous in texture, and that it is not strained beyond the elastic limit.

Assume, as in Fig. 107, a beam of elliptical cross section, and let s be the stress in extreme fibre in pounds per square inch. The stress at distance x from the axis will be $\frac{sx}{a}$; and the load supported by an element will be $\frac{sx}{a} \cdot dxdy$. The total force on one side of the axis oo' will be

$$F = \frac{s}{a}\int_o^a \int_{-b}^b xdx \cdot dy = \frac{2bs}{a^2}\int_o^a (a^2 - x^2)^{\frac{1}{2}} xdx = \tfrac{2}{3}\, sba.$$

On the opposite side of the axis in this and other symmetrical sections there is an equal and opposite dF' which forms a couple with dF. The moment of this couple will be

$$dR = dF \cdot 2x = \frac{2s}{a} \cdot x^2 dxdy,$$

and

$$R = \frac{2s}{a}\int_o^a \int_{-y}^y x^2 dxdy = \frac{4bs}{a^2}\int_o^a (a^2 - x^2)^{\frac{1}{2}} x^2\, dx = \tfrac{1}{4}\, \pi sba^2.$$

The distance out from the axis at which the resultant force, F, is located is given by

$$\frac{R}{2F} = \frac{\frac{1}{4}\pi sba^2}{2 \cdot \frac{2}{3} sba} = \frac{3}{16}\pi a = 0 \cdot 59a.$$

This distance from the neutral axis to the centre of stress may be designated by c; hence $R = 2Fc = Fc + F'c'$ for sections not symmetrical about the central axis. This location of the centre of stress is at least of mathematical interest. It may also be of practical value, for the values of f, calculated from $R = \frac{fI}{n}$ for beams broken by bending, are, as a rule, much larger than the values obtained from rupture by direct stress. The formula is based on the assumption that the material stretches in proportion to distance from the neutral axis, which is not true at rupture; but if c is used in the formula instead of n, and some experiments conducted by him which seem to corroborate Professor Klein's mathematical demonstration. This new light on the subject still further confirms the conclusions of my paper to the effect that the important forces of a governor are centrifugal force and angular accelerating force.

SECTION. FIG. 108.	A = area of section in square inches.	F = stress on one side of neutral axis in pounds.	R = moment of resistance in inch-pounds.	C = distance from neutral axis to centre of stress in inches.
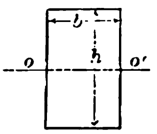	bh	$\frac{1}{4}sbh$	$\frac{1}{6}sbh^2$	$\frac{1}{3}h$
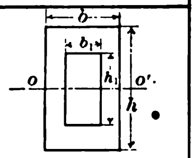	$bh - b_1h_1$	$\frac{s}{4h}(bh^2 - b_1h_1^2)$	$\frac{s}{6h}(bh^3 - b_1h_1^3)$	$\frac{1}{3}\cdot\frac{bh^3 - b_1h_1^3}{bh^2 - b_1h_1^2}$
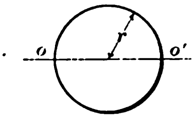	πr^2	$\frac{2}{3}sr^2$	$\frac{1}{4}\pi sr^3$	$\frac{3}{16}\pi r = 0.59r$
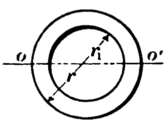	$\pi(r^2 - r_1^2)$	$\frac{2s}{3r}(r^3 - r_1^3)$	$\frac{\pi s}{4r}(r^4 - r_1^4)$	$\frac{3\pi}{16}\cdot\frac{r^4 - r_1^4}{r^3 - r_1^3}$
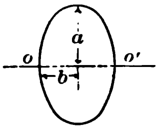	πab	$\frac{2}{3}sba$	$\frac{1}{4}\pi sba^2$	$\frac{3}{16}\pi a = 0.59a$
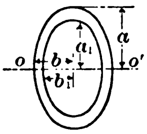	$\pi(ab - a_1b_1)$	$\frac{2s}{3a}(ba^2 - b_1a_1^2)$	$\frac{\pi s}{4a}(ba^3 - b_1a_1^3)$	$\frac{3\pi}{16}\cdot\frac{ba^3 - b_1a_1^3}{ba^2 - b_1a_1^2}$
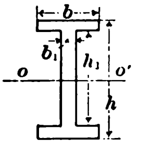	$2b(h-h_1)+b_1h_1$	$\frac{sb_1h_1^2}{4h}+\frac{sb}{4h}(h^2-h_1^2)$	$\frac{sb_1h_1^3}{6h}+\frac{sb}{6h}(h^3-h_1^3)$	$\frac{1}{3}\cdot\frac{b_1h_1^3+bh^3-bh^3}{b_1h_1^2+bh^2-bh_1^2}$
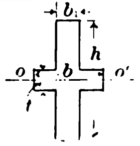	$b_1(h - t) + bt$	$\frac{sbt^2}{4h}+\frac{sb_1}{4h}(h^2 - t^2)$	$\frac{sbt^3}{6h}+\frac{sb_1}{6h}(h^3 - t^3)$	$\frac{1}{3}\cdot\frac{bt^3+b_1h^3-b_1t^3}{bt^2+b_1h^2-b_1t^2}$

The use of the table may be shown by a very simple example. Assume an 8 × 12 yellow-pine beam, 16 feet long, supported at each end and loaded in the middle by a single weight of 8,000 pounds. Equating the bending and resisting moments, we have at once $\frac{1}{4}wl = \frac{1}{6}sbh^2$, and, by substituting values, $\frac{1}{4} \times 8{,}000 \times 16 \times 12 = \frac{1}{6} \times s \times 8 \times 12 \times 12$, from which $s = 2{,}000$ pounds, the stress in extreme fibre. If, instead, we use the formula containing I, we shall have $\frac{sI}{n} = \frac{s}{\frac{1}{2}h} \cdot \frac{bh^3}{12} = \frac{1}{6}sbh^2 = \frac{1}{4}wl$, from which the same value of s will be obtained. But by using R we get the result more directly, and with the intellectual advantage of dealing with the concrete resisting moment instead of the conventional moment of inertia.

Before presenting the graphical method proper for determining from any given section of beam the resisting moment, it seems advantageous to review a few leading principles in graphical statics. Let Fig. 109 represent a beam supported at each end and loaded with several weights. From any point Q lay off on a vertical line to any convenient scale in pounds per inch the load-line QL, and from any point O draw the lines OQ, OV, OL, etc. Then from a point A in the line of the reaction R draw a line AB parallel to OQ. From the point of intersection F with the line of action of the load p_1 draw FD parallel to OV; continue thus until CZ is drawn parallel to OL. Then draw the line CA and OW parallel to it. The portion QW of the load-line will be the reaction at R, and WZ will be the reaction at R_1. The sum of R and R_1 is equal to the total load.

Now, at any point s in the beam there is a moment, $M = p_1(x - a) - Rx$. From the similar triangles Amr and OQW, $\overline{mr} : R = x : H$, or $R \cdot x = H \cdot \overline{mr}$. Also, from the similar triangles QVO and Fmn, $p_1 : H = \overline{mn} : x - a$, or $H\overline{mn} = p_1(x - a)$. Then, $M = p_1(x - a) - R \cdot x = H \cdot \overline{mn} - H.\overline{mr} = - H \cdot \overline{nr}$. That is, the moment at s is equal to the pole distance H, to the scale of the beam in inches, multiplied by the force $\overline{nr}$, to the scale of the load-line in pounds per inch. A like statement is true for any other section, as s^1. Hence the ordinate of the polygon $AFGCTA$ may be taken as the force which, applied at the pole distance H, will produce the existing moment at the given section; and the maximum ordinate locates the weakest section of the beam. This is true, too, for any pole distance, since the ordinates vary inversely as the pole distances

The point Z, at which AF and CJ intersect, is a point on the line of action of the resultant load upon the beam, or the centre of gravity of the loads; for the ordinate ZK measures the force which, applied at the pole distance, would produce in a section s^1 the same moment that reactions R and R_1 do.

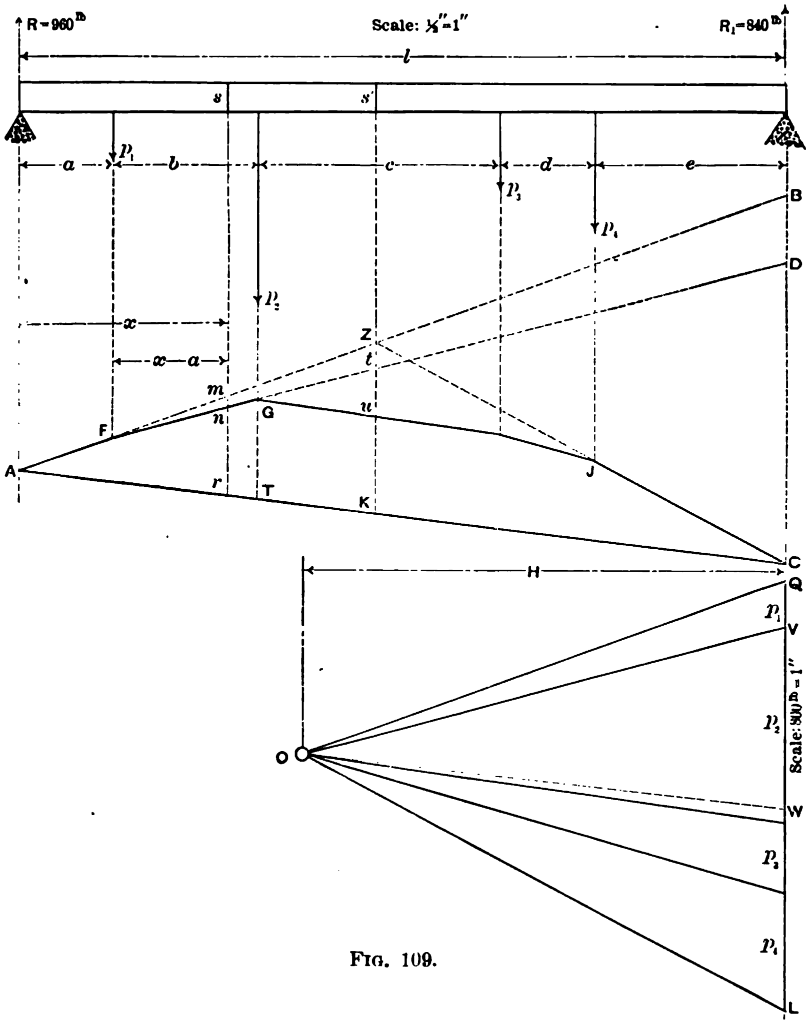

FIG. 109.

To show the practical application of the graphical method of finding the resisting moment and centres of stress in beams of such form of section that analytical methods will not apply, the section of the standard 100-pound steel rail as rolled by the Carnegie Steel Company has been chosen. The drawing, Fig. 109, made from dimensions on lithograph furnished by that company, has an area of 9.85 square inches as measured by the planimeter. If steel weighs 490 pounds per cubic foot, the area should be 9.8 square inches. This area is divided into small portions, whose centres of gravity are at 1, 2, 3,......12, and the areas of these portions are laid off on AB, Fig. 110, to the scale of one square inch area to one inch length. From the point O draw OA, OP, OB, etc., and then construct the polygon cDK as directed for Fig. 109. The point K projected on the rail section at G will be the centre of gravity of the section; for, if we consider a thin slice of the rail to be supported on a knife-edge through G, the separate areas will become weights or forces whose moments about G are balanced. The area of section as measured by ordinates is 9.8 square inches, of which 4.66 are above the centre of gravity and 5.14 are below.

If the stress in a beam varies directly as the distance from the neutral axis, the load, dF, supported by each element will be $\frac{sx}{a} \cdot dA$, where s is the stress in extreme fibre distant a from neutral axis, while dA is the sectional area of element distant x from neutral axis. And its moment will be $dR = dF \cdot x = \frac{s}{a} x^2 dA = dA \cdot x^2$, for $\frac{s}{a} =$ unity, or a stress of one pound per square inch at one-inch distance from neutral axis.

Now, in Fig. 110, the triangle OAP is similar to triangle cKa. Hence $x : \overline{Ka} = H : \overline{AP}$, or $\overline{AP} \cdot x = \overline{Ka} \cdot H$, where H is the pole distance and altitude of the triangle OAP. The line AP represents an area in square inches, which, multiplied by x, becomes the load on this area under the assumed condition of unit stress. Then if we multiply this load, or total stress, on the elementary area by x, we shall have its moment about the neutral axis in inch-pounds. Hence $\overline{AP} \cdot x^2 = H \cdot Ka \cdot x = 2H \cdot \frac{1}{2} x \overline{Ka} = 2H \times$ area of triangle caK. Again, the area of triangle $dba \times 2H$ is the moment of another force about the neutral axis. And, finally, if A represent the area of the polygon $cKDgdc$, we shall have $R = 2HA$ as the measure in inch-pounds of the resisting moment of a beam of the given section, when the stress at unit distance from neutral axis is unity. For a safe working stress, s, in extreme fibre it will be $\frac{s}{a} \cdot R$.

Thus, in Fig. 110, the value of A is 3.8 square inches, and the pole distance H is 5.75 inches. Then $R = 2HA = 2 \times 5.75 \times 3.8 = 43.7$ inch-pounds. Now, suppose the driver of a locomotive supporting 90,000 pounds on its four drivers stands on the 100-pound rail midway between two ties two feet apart. Treating the rail as a continuous girder, the greatest bending moment will be under the driver, and measured by $\frac{1}{8}wl$ in inch-pounds, where w is the load on driver, or 22,500 pounds, and l is the distance between centres of ties in inches. Then, equating the bending and resisting moments, we shall have for the upper part of the rail which is in compression,

$$\tfrac{1}{8}wl = \frac{s}{a} \cdot R = \tfrac{1}{8} \times 22{,}500 \times 24 = \frac{s}{3} \times 43 \cdot 7,$$

from which $s = 4{,}634$ pounds. Similarly for the under or tensile side of rail, $s = 4{,}248$ pounds.

The centres of stress, or the centres of gravity of the tensile and compressive forces, may also be found graphically. On a load-line, A_1B_1, in Fig. 112, lay off distances in pounds per inch —in this case one pound per inch—to represent stresses in the beam. As these stresses vary with the distance from the neutral axis and the area taken, a special construction is necessary, which is shown in Fig. 113, for the area (4) in Fig. 114. Lay off $\overline{Kf}$ equal to one inch, and $\overline{fe}$ at right angles on the scale in pounds per inch selected for the load-line A_1B_1. Then ni will be the stress per square inch at the centre of area (4). Project n to m, and draw Km. Lay off $\overline{Kh}$ equal to area (4) in square inches, which may be taken from the load-line AB in Fig. 110. Then the ordinate ho will be the total stress on area (4). Make similar constructions for all the areas on the tension side, and lay off the results on A_1B_1. Construct the polygon O^1HT^1, and project T_1 to T, the point through which passes the resultant tensile stress. In Fig. 111 is shown the corresponding construction for the compression side, which locates the centre of compression stresses at C.

As a check on these constructions it should be remembered that the resultant tensile and compressive stresses are theoreti-

The use of the table may be shown by a very simple example. Assume an 8 × 12 yellow-pine beam, 16 feet long, supported at each end and loaded in the middle by a single weight of 8,000 pounds. Equating the bending and resisting moments, we have at once $\frac{1}{4}wl = \frac{1}{6}sbh^2$, and, by substituting values, $\frac{1}{4} \times 8{,}000 \times 16 \times 12 = \frac{1}{6} \times s \times 8 \times 12 \times 12$, from which $s = 2{,}000$ pounds, the stress in extreme fibre. If, instead, we use the formula containing I, we shall have $\frac{sI}{n} = \frac{s}{\frac{1}{2}h} \cdot \frac{bh^3}{12} = \frac{1}{6}sbh^2 = \frac{1}{4}wl$, from which the same value of s will be obtained. But by using R we get the result more directly, and with the intellectual advantage of dealing with the concrete resisting moment instead of the conventional moment of inertia.

Before presenting the graphical method proper for determining from any given section of beam the resisting moment, it seems advantageous to review a few leading principles in graphical statics. Let Fig. 109 represent a beam supported at each end and loaded with several weights. From any point Q lay off on a vertical line to any convenient scale in pounds per inch the load-line QL, and from any point O draw the lines OQ, OV, OL, etc. Then from a point A in the line of the reaction R draw a line AB parallel to OQ. From the point of intersection F with the line of action of the load p_1 draw FD parallel to OV; continue thus until CZ is drawn parallel to OL. Then draw the line CA and OW parallel to it. The portion QW of the load-line will be the reaction at R, and WZ will be the reaction at R_1. The sum of R and R_1 is equal to the total load.

Now, at any point s in the beam there is a moment, $M = p_1(x - a) - Rx$. From the similar triangles Amr and OQW, $\overline{mr} : R = x : H$, or $R \cdot x = H \cdot \overline{mr}$. Also, from the similar triangles QVO and Fmn, $p_1 : H = \overline{mn} : x - a$, or $H\overline{mn} = p_1(x - a)$. Then, $M = p_1(x - a) - R \cdot x = H \cdot \overline{mn} - H.\overline{mr} = -H \cdot \overline{nr}$. That is, the moment at s is equal to the pole distance H, to the scale of the beam in inches, multiplied by the force $\overline{nr}$, to the scale of the load-line in pounds per inch. A like statement is true for any other section, as s^1. Hence the ordinate of the polygon $AFGCTA$ may be taken as the force which, applied at the pole distance H, will produce the existing moment at the given section; and the maximum ordinate locates the weakest section of distance from neutral axis is unity. For a safe working stress, s, in extreme fibre it will be $\frac{s}{a} \cdot R$.

Thus, in Fig. 110, the value of A is 3.8 square inches, and the pole distance H is 5.75 inches. Then $R = 2HA = 2 \times 5.75 \times 3.8 = 43.7$ inch-pounds. Now, suppose the driver of a locomotive supporting 90,000 pounds on its four drivers stands on the 100-pound rail midway between two ties two feet apart. Treating the rail as a continuous girder, the greatest bending moment will be under the driver, and measured by $\frac{1}{8}wl$ in inch-pounds, where w is the load on driver, or 22,500 pounds, and l is the distance between centres of ties in inches. Then, equating the bending and resisting moments, we shall have for the upper part of the rail which is in compression,

$$\tfrac{1}{8}wl = \frac{s}{a} \cdot R = \tfrac{1}{8} \times 22{,}500 \times 24 = \frac{s}{3} \times 43 \cdot 7,$$

from which $s = 4{,}634$ pounds. Similarly for the under or tensile side of rail, $s = 4{,}248$ pounds.

The centres of stress, or the centres of gravity of the tensile and compressive forces, may also be found graphically. On a load-line, A_1B_1, in Fig. 112, lay off distances in pounds per inch —in this case one pound per inch—to represent stresses in the beam. As these stresses vary with the distance from the neutral axis and the area taken, a special construction is necessary, which is shown in Fig. 113, for the area (4) in Fig. 114. Lay off $\overline{Kf}$ equal to one inch, and $\overline{fe}$ at right angles on the scale in pounds per inch selected for the load-line A_1B_1. Then ni will be the stress per square inch at the centre of area (4). Project n to m, and draw Km. Lay off $\overline{Kh}$ equal to area (4) in square inches, which may be taken from the load-line AB in Fig. 110. Then the ordinate ho will be the total stress on area (4). Make similar constructions for all the areas on the tension side, and lay off the results on A_1B_1. Construct the polygon O^1HT^1, and project T_1 to T, the point through which passes the resultant tensile stress. In Fig. 111 is shown the corresponding construction for the compression side, which locates the centre of compression stresses at C.

As a check on these constructions it should be remembered that the resultant tensile and compressive stresses are theoreti-

dist

s, in

T
pol
× 3
mot
the
Tre
mor
pou
is tl
the
par

fron
side

T
and
load
—in
bea
tral
whi
K
pou
will
Pro
squ
Fig.
(4).
side
O'*h*
res
con
of c

A
tha

cally equal, and that the sum of their moments about the neutral axis should equal the resisting moment. Thus the load-line A_1B_1 measures 9.83 pounds, and A_2B_2 measures 9.82 pounds. The moment of resultant tension is $9.83 \times 2.29 = 22.51$ inch-pounds, and of resultant compression is $9.82 \times 2.18 = 21.41$ inch-pounds. The sum is 43.92, against 43.7, found by Fig. 110. In practice it would not be necessary to find the centres C and T, if only the resisting moment was wanted. But it might be desirable to know, for instance, that in an I-beam the centres of stress were well within the flanges. If they were not, buckling might occur much sooner under increasing load.

In the construction for the resisting moment the rail section was drawn full size. And the elementary resisting moment was $dR = dA \cdot x^2$. If it is drawn to scale, so that r is the ratio of full depth of beam to the depth as drawn, then dA must be multiplied by r^2 to equal the actual area of element; and since x is always measured to the scale of section, as drawn, we must multiply x^2 by r^2. Hence, if $R = \int dA \cdot x^2$ for the full-size section, we shall have for the section, drawn to scale,

$$R = \int r^2 dA \cdot r^2 x^2 = r^4 \int dA \cdot x^2 = 2r^4 HA.$$

In regard to the accuracy of these graphical processes, the rail section, as measured by the planimeter, was 9.85 square inches, and by ordinates 9.8 square inches. The difference is 0.5 of one per cent. of the area by planimeter. The difference between resultant tensile and compressive stresses is 0.1 of one per cent. of either. The difference between the resisting moment and the sum of tensile and compressive moments is 0.5 of one per cent. of the resisting moment. These quantities were measured on the original drawing while in pencil. It is believed that the errors of these processes are less than the differences between the usual assumptions and the behavior of beams under load.

DISCUSSION.

Mr. Albert F. Hall.—I should like to discuss this paper further than I find possible at this time, and give a very neat graphical method for the moment of inertia. I do not think the form given for F is as it should be. A neater and clearer form seems to me as follows (Fig. 115):

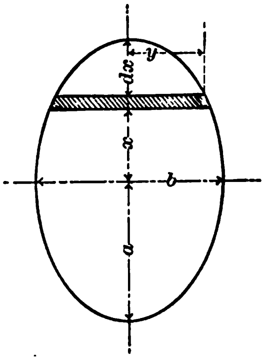

FIG. 115.

Let s = stress in extreme fibre. $y = \frac{b}{a}(a^2 - x^2)^{\frac{1}{2}}$.

$$s_x = s \cdot \frac{x}{a} = \text{stress at distance } x,$$

$$dF = s_x 2y \cdot dx = s\frac{x}{a} \cdot 2\frac{b}{a}(a^2 - x^2)^{\frac{1}{2}}dx.$$

$$F = \frac{2sb}{a^2}\int_o^a x(a^2 - x^2)^{\frac{1}{2}}dx.$$

$$= -\frac{2sb}{a^2}\Big/_o^a \frac{1}{3}(a^2 - x^2)(a^2 - x^2)^{\frac{1}{2}}.$$

$$F = \frac{2sb}{a^2} \times \frac{a^3}{3} = \frac{2sba}{3}.$$

The equal force on the other half forms a couple the moment of which is:

$$dR = 2xdF = 2x \times \frac{2sb}{a^2}(a^2 - x^2)^{\frac{1}{2}}dx.$$

$$= \frac{4sb}{a^2}x^2(a^2 - x^2)^{\frac{1}{2}}dx.$$

$$R = \frac{4sb}{a^2}\int_o^a x^2(a^2 - x^2)^{\frac{1}{2}}dx.$$

$$= \frac{4sb}{a^2}\Big/_o^a \frac{x}{8}(2x^2 - a^2)(a^2 - x^2)^{\frac{1}{2}} + \frac{a^4}{8}\sin.^{-1}\frac{x}{a}.$$

$$= \frac{4sb}{a^2} \times \frac{a^4}{8}\sin.^{-1}(1) = \frac{sba^2}{2} \times \frac{\pi}{2}.$$

$$= \frac{sba^2\pi}{4}.$$

The distance of the resultant force from the axis will be:

$$\frac{R}{2F} = \frac{sba^2\pi}{4} \div \frac{4sba}{3} = \frac{3}{16}a\pi = 0.59a.$$

Prof. Thomas Gray.—I think it would have been better had the author omitted the reference to the moment of inertia, as defined by Huyghens and Euler in this paper. I do not see that the use of the moment of inertia in this, its proper sense, has any reference at all to the subject. We have a little difficulty of course with the ordinary use of the term: "Moment of inertia of cross-section." No very great inconvenience is usually experienced in regard to that, but undoubtedly it is rather a misnomer. The quantity there referred to being the second moment of the sectional area, had better be given some other name perhaps. But really we have no quarrel with the moment of inertia proper at all. I may say for myself that I prefer Unwin's term, "section modulus" for the quantity. That really fills the whole bill.

There is one other point in the paper which is of some interest, and that is the calculations in which the distance between the centres of stress, instead of the distance from the neutral axis to the outside layer, is used as showing a nearer approach to the tensile strength. That, however, will not, I think, be found uniformly to apply.

There are some interesting difficulties with regard to the properties of materials; one is the difference between compression and tensile strength, and the fact that in certain classes of materials we have not got a constant modulus to deal with, which makes some difficulty in applying formulas of that kind. Take cast-iron, for instance—the moduli of elasticity for tension and for compression begin at about the equality for very light loads, but for heavy loads they do not nearly agree, and we have the neutral axis travelling across the section. I think that we should find the rule suggested to be nearly as bad as the one which we have been in the habit of using.

Mr. A. M. Greene.—I would like to ask how the differences arise in the use of these two formulas. They are both derived from the same supposition, I believe, and I cannot myself see how we can get two different results starting from the same point. I think they are both worked out in the same manner when we come to examine the theory, and I cannot quite understand why the results should be so different. I also do not see the advantage of this formula over the ordinary formula in which the modulus of rupture is used.

Mr. Gray.—The numbers, so far as I understand the paper—I read it hurriedly—are in a sense simple multiples of each other. Of course there is one element comes in, namely, the fact that the stress, at the breaking point, is not proportional to the distance from the neutral axis, and therefore that we cannot assume a triangular diagram of stress in our calculations. When, however, the calculation is made on the assumption that the stress is proportional to the distance from the neutral axis, and the number reduced in the ratio of the distance between the centres of stress to the whole depth of the beam, the results, for the examples taken, more nearly agree with the results of direct tension or compression.

The modulus of rupture from bending, as commonly tabulated, is really quite a distinct thing from either the tensile or compressional strength, and I think it is probably well to leave it so.

*Prof. C. V. Kerr.**—Mr. Albert F. Hall's graphical method for the moment of inertia is helpful and suggestive. Analytical methods apply to a large number of simple geometrical sections, but graphical methods apply to these also, and to that multitude of irregular sections to which analysis can be applied not at all or with great labor. Hence the more graphical methods we have at command the better.

The difficulties which beset Mr. Greene will probably disappear if he will read the present paper on "The Moment of Resistance" in connection with a former paper on "The Moment of Inertia," pp. 477–503, vol. xvi., *Transactions* A. S. M. E. The conditions are similar to those which call for a separate treatment of Statics and Dynamics.

I quite agree with Professor Gray that we have no quarrel with the moment of inertia proper. It is rather in its behalf that a quarrel has been made. One of our highest authorities on the mechanics of engineering calls the moment of inertia, I, of a rail section when reduced to figures, "bi-quadratic inches." He uses this term in consequence of multiplying one area in square inches by another. But it has no rational meaning. Neither does the term "inches to the fourth power," used by another author equally eminent. I have shown (pp. 482–483, vol. xvi., *Transactions* A. S. M. E.) that the moment of inertia of a body revolving about an axis may be measured by a force in pounds at one foot from the given axis; and further, that the kinetic energy of the body is measured in foot-pounds by the product of the force into one-half the angular velocity of the body, since that is the distance in feet along the unit arc passed over by a point while the body is brought to rest in one second, or, $E = \frac{1}{2}wI$.

It is somewhat encouraging to see the tendency to use the "modulus of section" of Unwin and Reuleaux; for that is simply the "moment of resistance" of the present paper, with the factor

---

* Author's closure, under the Rules.

course with the ordinary use of the term: "Moment of inertia of cross-section." No very great inconvenience is usually experienced in regard to that, but undoubtedly it is rather a misnomer. The quantity there referred to being the second moment of the sectional area, had better be given some other name perhaps. But really we have no quarrel with the moment of inertia proper at all. I may say for myself that I prefer Unwin's term, "section modulus" for the quantity. That really fills the whole bill.

There is one other point in the paper which is of some interest, and that is the calculations in which the distance between the centres of stress, instead of the distance from the neutral axis to the outside layer, is used as showing a nearer approach to the tensile strength. That, however, will not, I think, be found uniformly to apply.

There are some interesting difficulties with regard to the properties of materials; one is the difference between compression and tensile strength, and the fact that in certain classes of materials we have not got a constant modulus to deal with, which makes some difficulty in applying formulas of that kind. Take cast-iron, for instance—the moduli of elasticity for tension and for compression begin at about the equality for very light loads, but for heavy loads they do not nearly agree, and we have the neutral axis travelling across the section. I think that we should find the rule suggested to be nearly as bad as the one which we have been in the habit of using.

Mr. A. M. Greene.—I would like to ask how the differences arise in the use of these two formulas. They are both derived from the same supposition, I believe, and I cannot myself see how we can get two different results starting from the same point. I think they are both worked out in the same manner when we come to examine the theory, and I cannot quite understand why the results should be so different. I also do not see the advantage of this formula over the ordinary formula in which the modulus of rupture is used.

Mr. Gray.—The numbers, so far as I understand the paper—I read it hurriedly—are in a sense simple multiples of each other. Of course there is one element comes in, namely, the fact that the stress, at the breaking point, is not proportional to the distance from the neutral axis, and therefore that we cannot assume a triangular diagram of stress in our calculations. When, however, the calculation is made on the assumption that the stress is pro-

DCCXVI.*

EFFICIENCY OF BOILER HEATING SURFACE.

BY R. S. HALE, BOSTON, MASSACHUSETTS.
(Junior Member of the Society.)

SUMMARY OF PARAGRAPHS.

1. INTRODUCTION.

2. Limitation of paper to discussion of efficiency of heating surface only; efficiency of combustion to be assumed constant.

3. Rankine's formula.

4. B. F. Isherwood's averages and generalizations.

5. D. K. Clark's formula.

6. C. E. Emery's formula.

7. R. C. Carpenter's formula.

8. Formula calculated on assumption that transfer of heat is directly proportional to the difference of temperature.

9. If we choose the constants correctly, Rankine's formula appears to coincide with the formulæ of paragraphs 4, 5, 6, and 7 within the limit of error of most experiments.

10, 11. Show what the constants in Rankine's formulæ depend on, assuming that his laws of heat transfer are correct.

12. Even if the laws are not theoretically exact, they may give practically useful results.

13. The importance of the air supply, as shown by the formula.

14. Increased air supply *increases* the flue temperature, if the rate of combustion be kept constant. Shown by the formulæ and also by Burnat's experiments.

15. The causes of a change in the air supply per pound of fuel are beyond the scope of the paper.

16. A change in the thermal resistance of the heating surface has the same effect as an equal change in its area.

---

* Presented at the New York meeting (December, 1896) of the American Society of Mechanical Engineers, and forming part of Volume XVIII. of the *Transactions*.

17. Considers the effect on the economy of the temperature at which the steam is generated.

18. The bearing of paragraph 17 on the question of economizers.

19. The effect of radiation on the formulæ and on the curves (Fig. 124).

20. Comparing paragraph 19 with paragraphs 3 to 9 inclusive shows that radiation in the experiments of paragraphs 3 to 9 was almost certainly less than two per cent. at ordinary rates of working, and that to-day it is probably less than five per cent. at ordinary rates of working. (Ordinary rate taken at 11½ square feet of heating surface per boiler horse-power.)

21. The formula of paragraph 17 simplified, and a few constants given for modern practice.

22. In comparing a small number of tests this formula may not agree exactly with the results, because the efficiency of combustion, etc., etc., may be different in different tests. It should, however, agree with the averages if the number of tests is sufficient to get rid of accidental variations.

23. It is presented on the ground that it is probably better than any other, and therefore may be practically useful.

24. Mr. G. H. Barrus' anthracite coal experiments and an average curve.

25. Professor Kennedy's Thorneycroft boiler experiments.

EFFICIENCY OF BOILER HEATING SURFACES.

1. The work of the following paper was done for the Steam Users' Association of Boston, organized by Mr. Edward Atkinson, of which Mr. George Atkinson is secretary.

With their permission I take pleasure in offering it to the Society.

2. The paper is intentionally limited to the question of efficiency of heating surface, which will be defined as the ratio between the heat passed through the heating surface into the steam or water and the sensible heat generated in the furnace. If there are any differences of efficiency due to different rates of combustion per square foot of grate, or losses due to incomplete combustion, they are excluded from present consideration.

In order to fix our ideas, it will therefore be assumed that the rate of combustion per square foot of grate is kept constant, the area of the heating surface being changed as required, and the heat value of the coal is defined to be, for the purposes of this paper only, the amount of heat rendered sensible when burning at the assumed constant rate of combustion.

REVIEW OF PREVIOUS WORK.

3. Rankine* discusses the efficiency of the heating surface, and develops a formula based on the assumption that the transfer of heat through any small part of the heating surface is equal to a constant multiplied by the square of the difference of temperatures on either side of the heating surface.

His formula is of the form

$$\frac{Ea}{Ep} = \frac{BS}{S - AF} = \frac{B}{1 - AF/s} \quad . \quad . \quad . \quad . \quad . \quad (1)$$

in which

Ea = the actual evaporation per pound of fuel.

Ep = the theoretically possible evaporation per pound of fuel.

S = the total heating surface in square feet.

F = the total fuel in pounds per hour.

A and B are constants.

He gives as the values of the constants:

$A = \frac{1}{2}$ for ordinary chimney draft and $\frac{3}{10}$ for forced draft.

$B = 1$ if economizers are provided.

$B = \frac{11}{12}$ if economizers are not provided and the draft is ordinary.

$B = \frac{19}{20}$ if economizers are not provided and the draft is forced.

It will be a little more convenient to change the formula so as to have the evaporation per square foot of heating surface, and not the coal per square foot of heating surface, as the second variable.

Call the total evaporation per hour = W; then,

$$FEa = W, \text{ and } F = \frac{W}{Ea};$$

$$\frac{Ea}{Ep} = \frac{B}{1 + A\dfrac{W}{SEa}} = \frac{BEa}{Ea + A\dfrac{W}{S}};$$

---

* *Steam Engine*, p. 234.

$$Ea + A\frac{W}{S} = BEp;$$

$$Ea = BEp - A\frac{W}{S};$$

which is a straight line if Ea and $\frac{W}{S}$ are the variables. . . (2)

Then taking $Ep = 14\frac{1}{2}$ and A and B as given by Rankine, we find we can plot the four lines of Fig. 116 as the curves of four different classes of boilers.

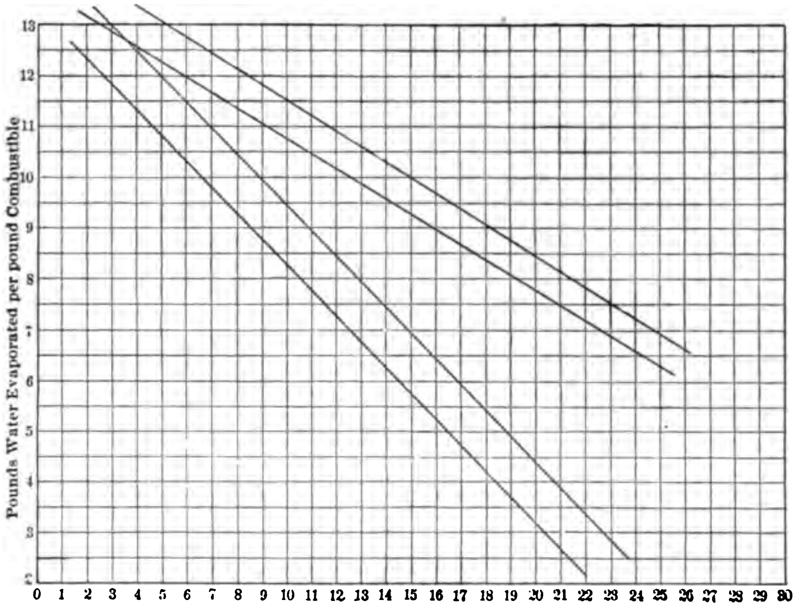

FIG. 116. — RANKINE. — The Steam Engine page 295.
Transfer of Heat Assumed
Proportional to Temperature.^{2}

4. B. F. Isherwood * discusses numerous tests, and finally concludes that the factors controlling the efficiency are the relations between the coal burned per hour, the grate area, the heating surface, and the area for smoke through the tubes. On p. lxxxviii, Isherwood gives tables of probable average performance of two boilers with a given rate of combustion per square foot of grate and a given relation between the grate and tube area, but with

---

* *Researches in Steam Engineering*, vol. ii., p. xxiii, *et seq.*

varying amounts of heating surface. These tables have been reduced to the same variables used in Fig. 117 and formula (2), and the resulting curves are presented in Fig. 116. Isherwood does not present any formula.

5. D. K. Clark * deduces the following formula from a large number of experiments:

$$W = ar^2 + Bc;$$

in which W = water per square foot of grate.
c = coal per square foot of grate.
r = ratio of heating to grate surface.
a and B are constants.

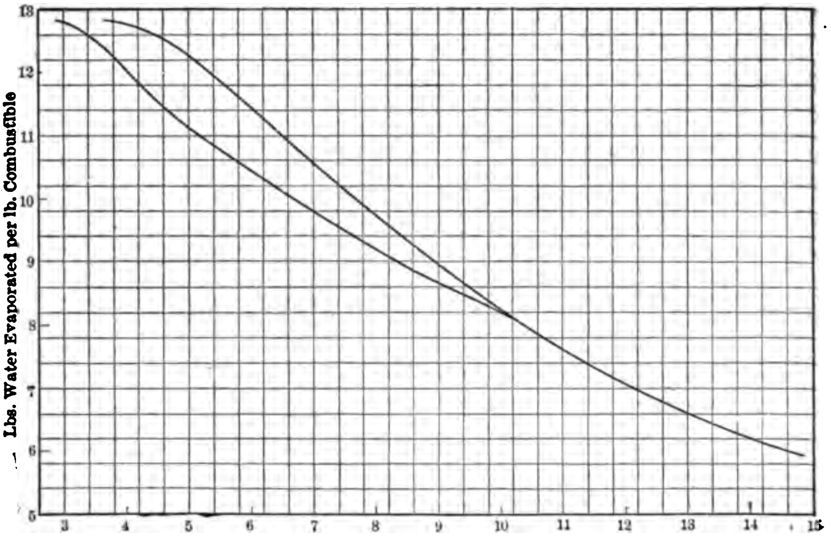

FIG. 117.—ISHERWOOD
Researches in Steam Engineering, Vol. 2, p LXXXVIII

The formula obviously does not hold outside of the limits of the experiments, since the evaporation per pound of coal could never fall below B, however much coal was burned, while no matter how little coal was burned the boiler could never evaporate less than ar^2 pounds of water for each foot of grate. However, the resulting curves for various classes of boilers have been plotted in Figs. 118 and 119, using the values of a and B given in Kent's *Handbook*, p. 681, and taking the variables as the evaporation per pound of

---

* *Steam Engine*, vol. i., p. 310.

coal and the evaporation per square foot of heating surface per hour, as before.

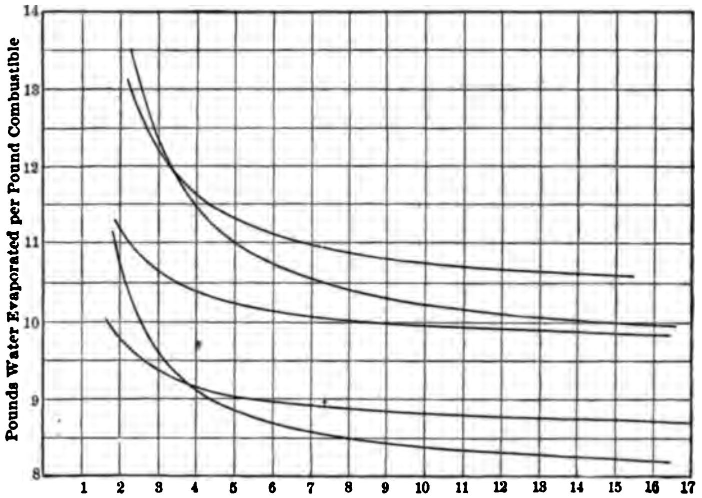

FIG. 118.—CLARK

Steam Engine, Vol. I. p 327, also Kent's Handbook, p 681

6. C. E. Emery* gives a formula of the form,

$$Ea = \frac{K^1}{C + K_2} + K_3 \quad . \; . \; . \; . \; . \; . \; . \quad (6)$$

in which Ea = actual evaporation per pound combustible.

C' = pounds combustible per square foot of heating surface per hour.

K_1, K_2, and K_3 are constants.

If we take pounds water per hour per square foot of heating surface $= \frac{W}{S}$, then,

$$C' = \frac{W/S}{Ea};$$

and we may write:

$$Ea = \frac{K_1\,Ea}{\frac{W}{S} + K_2Ea} + K_3;$$

---

* General Report Group XX., Philadelphia Exhibition, 1876, and also *Transactions* A. S. M. E., vol. xvii., p. 269.

or, simplifying,

$$Ea \frac{W}{S} + K_2 (Ea)^2 = K_1 Ea + \frac{W}{S} K_3 + K_2 K_3 Ea ;$$

and, finally,

$$Ea = \frac{K_1}{K_2} + K_3 - \frac{I}{K_2} \frac{W}{S} \left(1 - \frac{K_3}{Ea}\right) . \quad . \quad . \quad . \qquad (7)$$

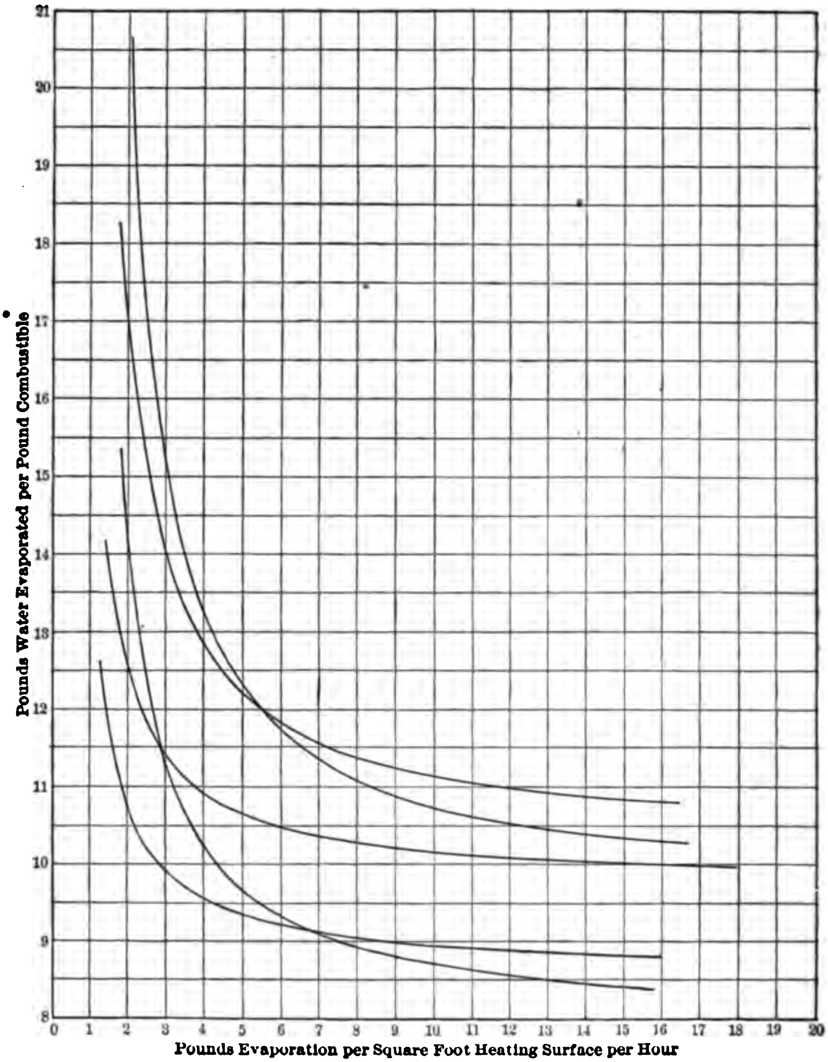

FIG. 119. — CLARK

Steam Engine, Vol. I. p 327, also Kent's Handbook, p 681

And, except for the terms containing K_3, the form is the same as Rankine's formula (2). These terms are not very important, as will be seen on plotting the curves, Fig. 120, using for constants the two sets given by Emery, *Transactions* A. S. M. E., vol. xvii., p. 269.

If the two curves be extended to very high rates of evaporation they will finally meet, but will retain their general form.

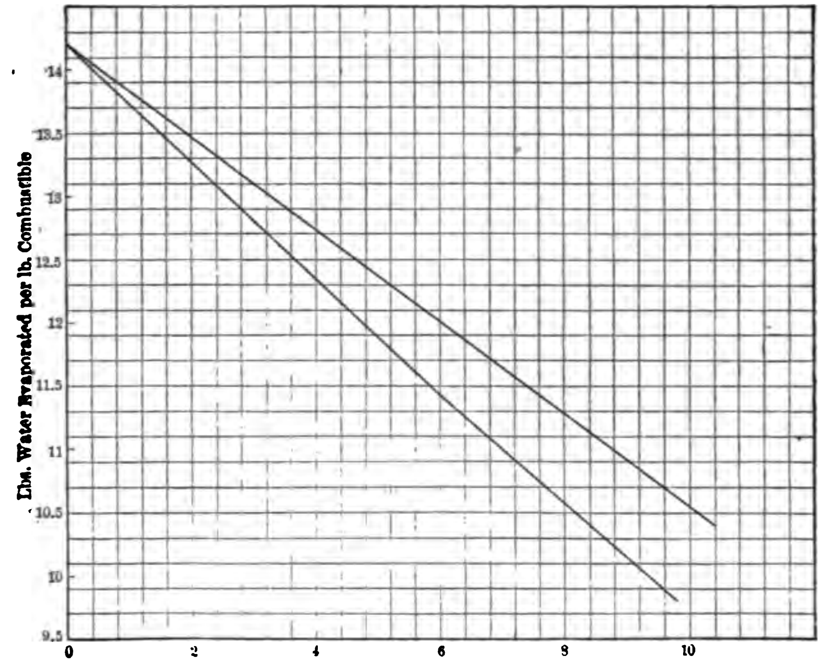

FIG. 120. — C. E. EMERY GENERAL REPORT, GROUP XX Centennial (Phil.) Exhibition, 1876, and also Transactions A.S.M.E., Vol. XVII, p 270

7. R. C. Carpenter* takes a set of experiments reported in Weisbach's *Mechanics*, and deduces a formula:

$$Y = B - A\sqrt{x} \quad . \quad . \quad . \quad . \quad . \quad . \quad . \quad . \quad (8)$$

in which Y = actual evaporation per pound combustible.

x = pounds combustible per square foot of heating surface per hour.

A and B are constants, B depending on the coal, A on the boiler.

---

* *Transactions* A. S. M. E., Vol. XVII., p. 276.

This formula has this misfortune, in common with Clark's formula, that it gives impossible results in certain cases—*i.e.*, if $A\sqrt{x} > B$. Nevertheless, at ordinary rates of evaporation it does not depart widely from some of the others, as is seen on plotting its results with the same variables as before (Fig. 121).

8. Inasmuch as even lately calculations have been made by engineers on the assumption that the flow of heat through the heating surface varies directly as the difference of temperature between the two sides of the heating surface, we will proceed to find the formula for the efficiency, if this assumption be true.

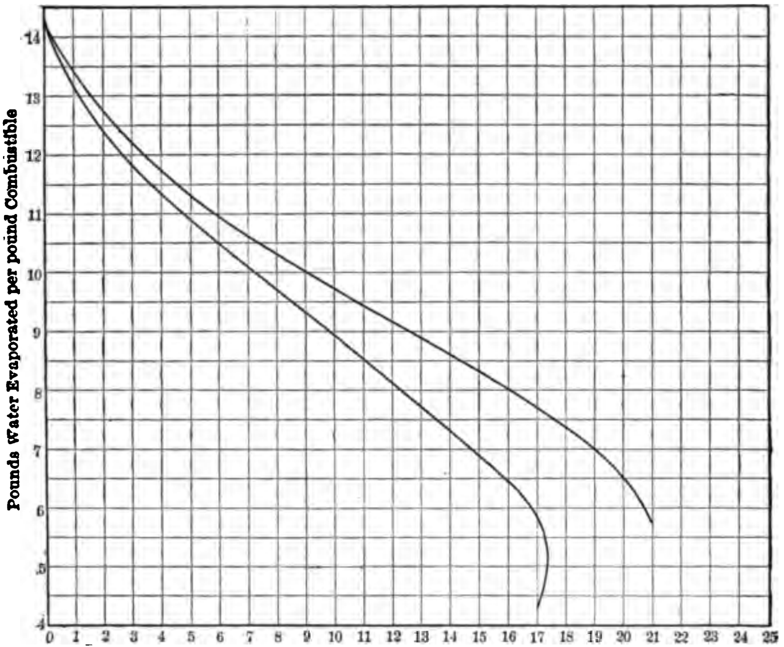

FIG. 121. — R. C. CARPENTER

Transactions of A.S.M.E. Vol. XVII. p. 277, from Weisbach's Mechanics (American Edition.)

Let S = total heating surface.

Let t = temperature of water on one side of the heating surface (constant) above the temperature of the air.

Let T = temperature of gas on the other side of the heating surface above the temperature of the air. T_1 and T_2 are the initial theoretical and the final values of T.

c = specific heat of the gas.

w = weight of gas per hour.
F = fuel per hour.
f = pounds gas per pound fuel.
W = total pounds water per hour.
b = units of heat per square foot for each degree difference of temperature.
Ea = actual evaporation, Ep = possible evaporation, per pound fuel.

Then, for any element of surface,

$$(T-t)b \cdot ds = cwdT \quad \ldots\ldots \quad (9)$$

Transpose and integrate,

$$\frac{bS}{cw} = \log\frac{T_1-t}{T_2-t} \quad \ldots\ldots\ldots \quad (10)$$

$$\log^{-1}\frac{bs}{cw} = \frac{T_1-t}{T_2-t} \quad \ldots\ldots\ldots \quad (11)$$

But the efficiency is

$$\frac{Ea}{Ep} = \frac{T_1-T_2}{T_1} = \frac{T_1-T_2}{T_1-t} \times \frac{T_1-t}{T_1} \quad \ldots \quad (12)$$

Call $\log^{-1}\frac{bs}{cw} = L$ for convenience in writing; . . . . . (13)

(11) becomes

$$T_1 - t = LT_2 - Lt \quad \ldots\ldots \quad (14)$$

Add $-LT_1$ to each side :

$$T_1 - LT_1 - t = LT_2 - LT_1 - Lt \quad \ldots \quad (15)$$

Simplify :

$$T_1(1-L) - t = -L(T_1-T_2) - Lt; \quad \ldots \quad (16)$$

simplify further :

$$T_1(L-1) - t(L-1) = +L(T_1-T_2); \quad \ldots \quad (17)$$

and, finally,

$$\frac{T_1-T_2}{T_1-t} = \frac{L-1}{L}; \quad \ldots\ldots\ldots \quad (18)$$

and, from (12) and (18),

$$\frac{Ea}{Ep} = \frac{L-1}{L} \cdot \frac{T_1-t}{T_1} = \left(\frac{T_1-t}{T_1}\right)\frac{\log^{-1} bS/cw - 1}{\log^{-1} bS/cw} \quad \ldots \quad (19)$$

But $w = Ff$, and $W = FEa$.

$$\frac{Ea}{Ep}=\left(\frac{T_1-t}{T_1}\right)\frac{\log^{-1} bSEa/cfW_{-1}}{\log^{-1} bSEa/cfW}=\frac{T_1-t}{T_1}\left(1-\frac{1}{\log^{-1} bs/Ea}\right) \tag{20}$$

And then choosing constants b, c, f, T_1, t, and Ep, so that when

$$\frac{W}{S}=o \quad Ea=14,$$

$$\frac{W}{S}=15 \quad Ea=7,$$

so that it coincides with a Rankine curve (shown dotted) at two points, we may plot the curve of Fig. 122.

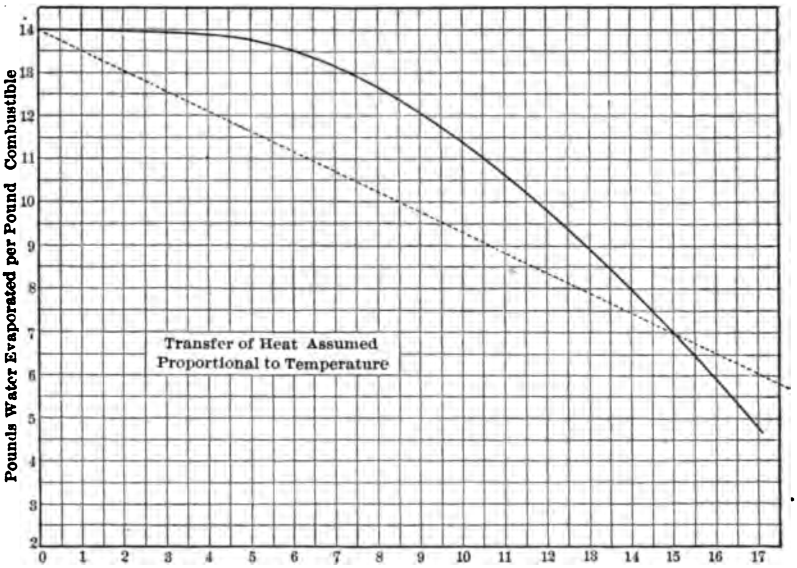

FIG. 122.

9. Now, if such of the above formulæ and curves as have been deduced from actual experiments are placed side by side it will be seen that a formula similar to that of Rankine will fit them as well as any. To illustrate this, some half a dozen or more of the curves have been drawn together in Fig. 123, and the actual tests from which one of the curves was deduced have been shown by circles.

It is apparent that a straight line (Rankine's form) is as good as any, and it will be adopted for the following reasons:

(1) It fits the experiments as well as any.

(2) It does not give impossible results beyond the limits of the experiments.

(3) It is simple in form.

(4) It is founded on rational though possibly mistaken assumptions.

10. It will now be of advantage to follow Rankine through the operations by which he deduces the formula.

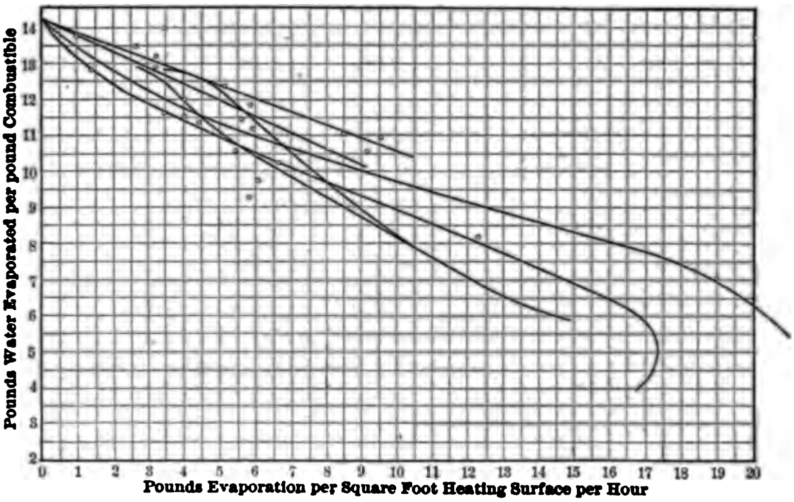

FIG. 123.

Let us use the same letters as in paragraph 8, except that the flow of heat through each square foot of surface is

$$\frac{(T-t)^2}{a}, \ a \text{ being a constant.}$$

We have, as before,

$$\frac{(T-t)^2}{a}\,ds = cwdT \quad \ldots\ldots \quad (21)$$

Transpose and integrate,

$$\frac{S}{acw} = \left(\frac{1}{T_1 - t}\right) - \left(\frac{1}{T_2 - t}\right) = \frac{T_1 - T_2}{(T_1 - t)\ (T_2 - t)} \quad . \quad (22)$$

But,

$$\frac{T_1 - T_2}{T_1} = \frac{Ea}{Ep} \quad \ldots\ldots\ldots \quad (23)$$

$$\frac{Ea}{Ep} = \left(\frac{T_1 - t}{T_1}\right) \frac{\log^{-1} bSEa/cfW_{-1}}{\log^{-1} bSEa/cfW} = \frac{T_1 - t}{T_1}\left(1 - \frac{1}{\log^{-1} bs/Ea}\right) \tag{20}$$

And then choosing constants b, c, f, T_1, t, and Ep, so that when

$$\frac{W}{S} = o \; Ea = 14,$$

$$\frac{W}{S} = 15 \; Ea = 7,$$

so that it coincides with a Rankine curve (shown dotted) at two points, we may plot the curve of Fig. 122.

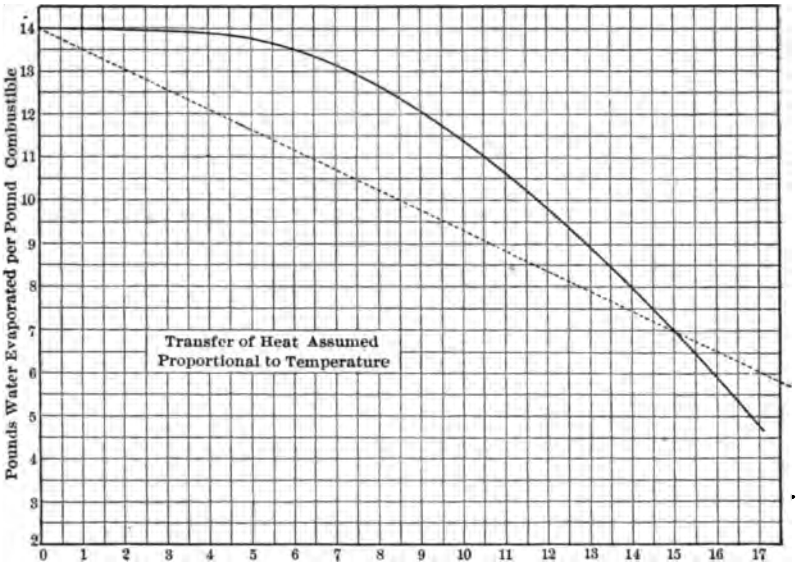

FIG. 122.

9. Now, if such of the above formulæ and curves as have been deduced from actual experiments are placed side by side it will be seen that a formula similar to that of Rankine will fit them as well as any. To illustrate this, some half a dozen or more of the curves have been drawn together in Fig. 123, and the actual tests from which one of the curves was deduced have been shown by circles.

It is apparent that a straight line (Rankine's form) is as good as any, and it will be adopted for the following reasons:

(1) It fits the experiments as well as any.

(2) It does not give impossible results beyond the limits of the experiments.

(3) It is simple in form.

(4) It is founded on rational though possibly mistaken assumptions.

10. It will now be of advantage to follow Rankine through the operations by which he deduces the formula.

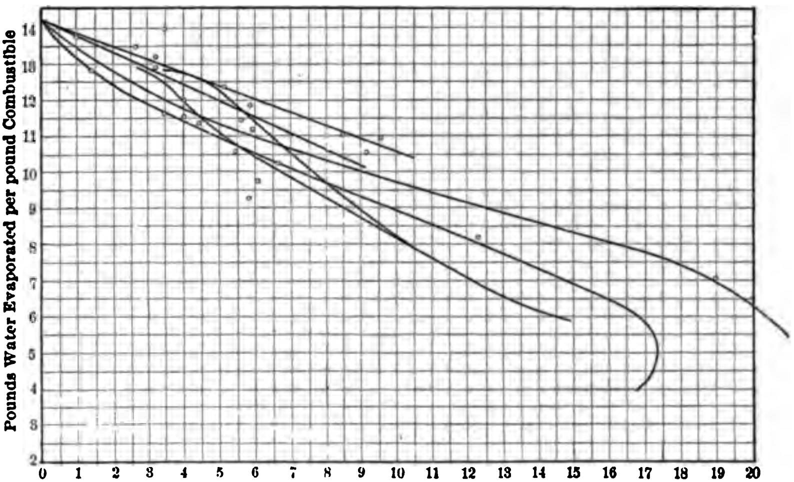

FIG. 123.

Let us use the same letters as in paragraph 8, except that the flow of heat through each square foot of surface is

$$\frac{(T-t)^2}{a}, \ a \text{ being a constant.}$$

We have, as before,

$$\frac{(T-t)^2}{a} ds = cwdT \quad . \ . \ . \ . \ . \ . \ . \quad (21)$$

Transpose and integrate,

$$\frac{S}{acw} = \left(\frac{1}{T_1 - t}\right) - \left(\frac{1}{T_2 - t}\right) = \frac{T_1 - T_2}{(T_1 - t)\ (T_2 - t)} \quad . \quad (22)$$

But,

$$\frac{T_1 - T_2}{T_1} = \frac{Ea}{Ep} \quad . \ . \ . \ . \ . \ . \ . \ . \quad (23)$$

$$T_1 Ep - T_2 Ep = T_1 Ea \quad . \quad . \quad . \quad . \quad . \quad (24)$$

$$T_2 = T_1 \left(\frac{Ep - Ea}{Ep}\right) = T_1 \left(1 - \frac{Ea}{Ep}\right) \quad . \quad . \quad . \quad (25)$$

Substitute (23) and (25) in (22):

$$\frac{S}{acw} = \frac{Ea}{Ep}\,\frac{T_1}{(T_1 - t)}\,\frac{1}{(T_1[1 - Ea/Ep] - t)} \quad . \quad . \quad . \quad (26)$$

$$\frac{wca}{S} = \frac{Ep\,.\,(T_1 - t)\,.\,(T_1 - T_1\,Ea/Ep - t)}{Ea\,T_1}$$

$$= \frac{Ep\,(T_1 - t)^2 - T_1 Ea\,(T_1 - t)}{Ea T_1}. \quad (27)$$

$$\frac{acw}{S} = \frac{Ep}{Ea}\cdot\frac{(T_1 - t)^2}{T_1} - (T_1 - t) \quad . \quad . \quad . \quad . \quad (28)$$

$$\frac{Ea}{Ep} = \frac{(T_1 - t)^2 / T_1}{(T_1 - t) + \frac{acw}{S}}; \quad . \quad . \quad . \quad . \quad . \quad (29)$$

which may be written,

$$\frac{Ea}{Ep} = \frac{(T_1 - t)\,T_1}{1 + acw/S\,(T_1 - t)} = \frac{(T_1 - t)\,T_1}{1 + acfF/(T_1 - t)\,S}\,. \quad (30)$$

And this is Rankine's formula (1) if

$$B = \frac{T_1 - t}{T_1} \quad . \quad . \quad . \quad . \quad . \quad . \quad . \quad . \quad (31)$$

and

$$A = \frac{acf}{T_1 - t} \quad . \quad . \quad . \quad . \quad . \quad . \quad . \quad . \quad (32)$$

11. T_1 depends on the heat in the coal. Call K the heat units per pound of coal burned; then,

$$T_1 fc = K \quad . \quad . \quad . \quad . \quad . \quad . \quad . \quad . \quad . \quad (33)$$

and (31) becomes

$$B = \frac{\frac{K}{fc} - t}{\frac{K}{fc}} = \frac{K - tcf}{K} \quad . \quad . \quad . \quad (34)$$

and (32) becomes

$$A = \frac{ac^2f^2}{K - tcf} \quad . \quad . \quad . \quad . \quad . \quad . \quad (35)$$

12. It is known that laws of the transfer of heat through the heating surface are not as simple as they appear in Rankine's

formula, or in paragraph 8; nevertheless, it is probable that in commercial boilers the true but very complicated laws coincide closely enough with the simpler assumption to allow us to draw conclusions from the latter with some degree of confidence.

13. We may now notice that the pounds of gas per pound fuel

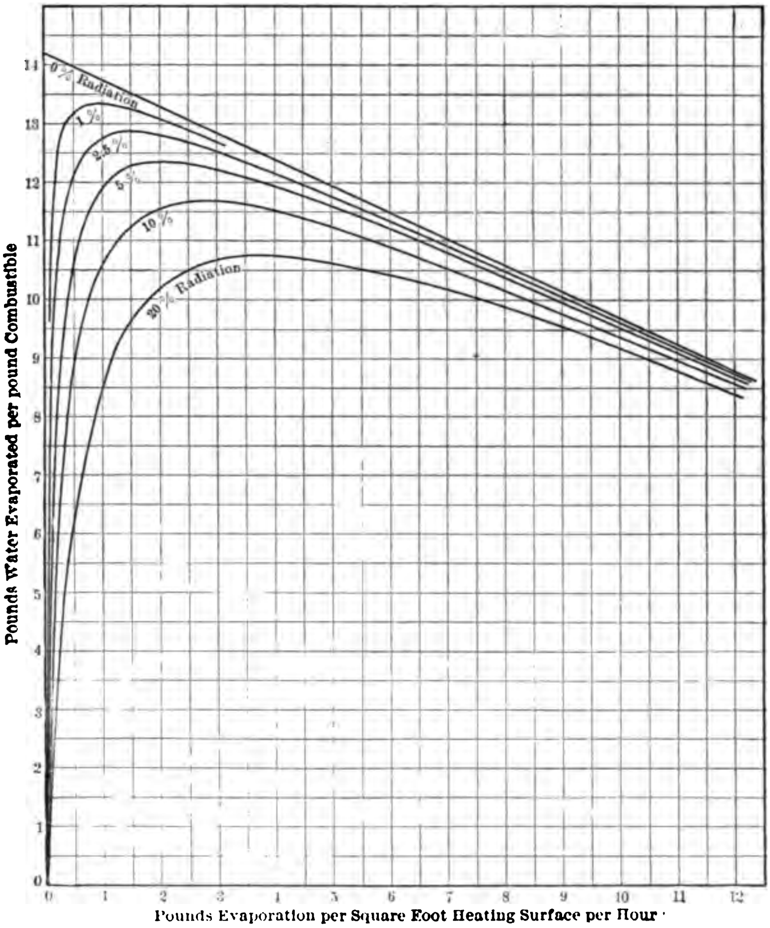

FIG. 124.

will affect formulæ (30) and (1) four times, since it appears once in B and three times in A, and each of these four times in such a way as to reduce the efficiency of the heating surface whenever the air supply increases. This furnishes at once a simple and probable explanation of the variation of particular tests from the result indicated by the formula. It is obviously not sufficient to know the comparative rate of combustion or evaporation in two tests if the results are affected four times as much by the air supply as by the rate of combustion or evaporation. Of course, if we take a large number of tests, variations of air supply should finally cancel out, and the averages should agree.

14. The importance of the air supply may be a little better appreciated if we notice in equations (10) and (22) that for any

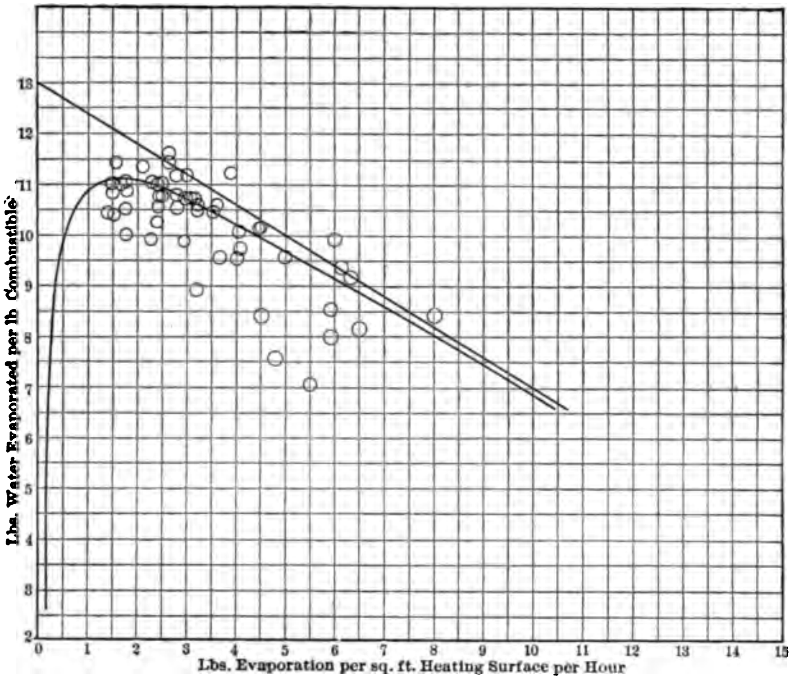

FIG. 125.—TESTS OF ANTHRACITE COAL FROM BARRUS BOILER TESTS

ordinary case an increase in the air supply causes an *increase* in the final temperature of the flue gases, so that not only are there more pounds of gas to carry off the heat, but there is more heat in each pound of the gas carried away. This is not so much of a paradox when we remember that though an increase in the air supply lowers the initial temperature, T_1, yet this very lowering of the temperature diminishes the transfer of heat from the gas through the heating surface, while the lessened time that each pound of gas remains in contact with the heating surface still further diminishes its loss of heat, and increases its final temperature. This fact was noted in 1858 by Emile Burnat.* His experiments showed:

Day.	Cubic feet air per pound fuel.	Temperature of waste gases.
1st	272	624
2d	198	601
3d	168	550
4th	124	486

The amount of coal per hour being kept constant.

15. The above discussion shows the *effect* of a change in the air supply per pound of fuel. The *causes* which determine the air supply are beyond the scope of this paper. They are connected with those governing the efficiency of combustion and the generation of sensible heat from latent heat, and hence the causes of a change of air supply need not be discussed when considering only the transfer of heat from one side of the heating surface to the other.

16. The coefficients of transfer of heat, b in paragraph 8, and $1/a$ in paragraph 10, appear wherever S, the area of heating surface, appears. An increase of given per cent. in the resistance of the surface to the transfer of heat has therefore the same effect as a decrease of the area of the surface by a proportional amount.

17. We have now considered all of the terms in the formulæ except t, the temperature of the water at boiler pressure. Though this is frequently neglected, it is as important as some of the others. We will get at it best by supposing we have a curve for a given value of t, and then determining the new curve if t is changed and the other quantities kept constant. Take, for example, Emery's upper curve, Fig. 120, and assume that the experiments were made at atmospheric pressure, as was probably the case, and that the temperature of the outside air was 62. Then $t = 212 - 62 = 150$. Let us determine what would have been the result had the pressure been 142 pounds' temperature of steam, 362, and $t = 362 - 62 = 300$. Emery's curve is, if we use formula (2), (Rankine's),

$$Ea = BE_p - A\frac{W}{S},$$

best expressed by taking $B \times Ep = 14.2$, and $A = .365$.

---

* Bull. Soc. Ind. de Mulhouse, 1858, p. 254; quoted by D. K. Clark, *Steam Engine*, vol. i., p. 289.

We will assume $T_1 = 3{,}500$. This gives

$$Ep = 14.2 \frac{3{,}500}{3{,}500 - 150} = 14.85,$$

and $B \times Ep$ becomes, if t is changed to 300 degrees,

$$14.85 \times \frac{3{,}200}{3{,}500} = 13.56.$$

$$A_{150} = .365 = \frac{acf}{3{,}350},$$

whence $acf = 1{,}220$.

$$A_{300} = \frac{1{,}220}{3{,}200} = .382,$$

and the formula becomes, for $t = 300$,

$$Ea = 13.56 - .382 \frac{W}{S},$$

showing, other things being equal, a gain of about 6 per cent. due to running at atmospheric pressure instead of at 142 pounds. Therefore, 85 per cent. efficiency at atmospheric pressure is no better than 80 per cent. at present ruling boiler pressures.

18. If a portion of the boiler surface be removed and an equal area of economizer heating surface be put in its place, t becomes very nearly 0 for this part of the heating surface, and though the true equation is obviously rather complicated, the formula indicates for steam at 140 pounds a saving of several per cent., say from 3 to 10, depending on the relative amounts of boiler and economizer surface, and on the total heating surface. If in addition to or instead of *changing* part of the boiler heating surface to economizer heating surface, the *total* amount of heating surface should be increased by adding an economizer, then there will be an additional gain.

The questions of relative first cost, depreciation, reliability, etc., of economizer or boiler heating surface are beyond the scope of this paper, but unless these considerations interfere, the *proportion* of economizer heating surface should obviously be as large as can practically be operated. In English (Lancashire) boilers, which can be safely run at very high rates of evaporation per square foot of heating surface, this limit seems to lie at the point where so much heat is put into the economizer that steam is generated in it. This gives in practice a relation of 50 per cent. boiler heating surface and 50 per cent. economizer heating surface.

In American practice the boilers are generally designed so that it is not practicable to run at very high rates of evaporation. Therefore for such boilers the rule indicated would appear to be to give to the boilers the smallest workable amount of heating surface, and then add economizer heating surface until the desired efficiency is reached.

19. One further point remains to be considered—viz., radiation. Most of the results—Emery's, Isherwood's, and the Weisbach tests—are on internally fired boilers at low pressure. Hence we should expect to find the radiation comparatively small. The per cent. of radiation varies as we change the rate of evaporation, but the radiation expressed in heat units per minute is constant. Therefore the effect will be to change the formula (2) so that if R be the radiation expressed in units of evaporation per hour for each square foot of heating surface of the boiler,

$$Ea = B \times Ep - A\left(\frac{W}{S} + R\right) - \frac{R\,Ea}{\frac{W}{S}} \quad . \quad . \quad . \quad . \quad (36)$$

These changes will have a very small effect if $\frac{W}{S}$ is large. As $\frac{W}{S}$ becomes small the curve begins to droop towards the origin at the left-hand side. Fig. 124 shows the effect on an assumed curve if the radiation be 0 per cent., 2½ per cent., 5 per cent., 10 per cent., and 20 per cent. at a rating of 3 pounds evaporation per square foot of heating surface per hour.

20. It is apparent, on reviewing paragraph 3 to paragraph 9 inclusive, that not only was the constant radiation very small in the tests from which Emery and others derived their formulæ, but that it must also have been very small not to appear in Clark's results. The radiation in these tests could not have been over 2 per cent. at a rating of 3 pounds evaporation per square foot; otherwise the droop would have been apparent. Although the radiation depends directly on t, the temperature of the steam, so that, for modern practice, where t has doubled its value this 2 per cent. would become 4 per cent.; and although there is possibly small additional radiation from some externally fired boilers, yet it does not seem possible that the radiation could in modern prac-

tice have gone up to much over 6 or 7 per cent. at most, and it is probable that it is not over 5 per cent., if it is as much as that.

21. Formula (36) may be put in a slightly more convenient form.

$$Ea = B \times Ep - A^1 \frac{W}{S} - \frac{R^1}{\frac{W}{S}} \quad . \quad . \quad . \quad . \quad (37)$$

This will be incorrect at very low rates of evaporation, but will be found accurate enough for practical purposes.

For modern practice,

B = about .90 at present steam pressures and with a small air supply. If the methods of firing are such that a large air supply is necessary for proper combustion, B may be .80 or even .75.

If economizers are used, $B = 1$ in every case.

$A^1 = .3$ with a clean boiler and a very small air supply. A^1 increases directly as the resistance of the heating surface to heat transfer, and increases approximately as the square of the air supply per pound of fuel. A^1 = about .5 in ordinary practice, and may reach .9, or even higher, in bad cases.

R^1 = about $\frac{5}{10}$ in well-clothed internally fired boilers at low pressures. It may have reached 3 in some modern boilers, but probably is not over 1 or 1.5.

22. As was shown in paragraph 13, neither this formula nor any other formula will, with our present skill in boiler-testing, allow us to infer from the efficiency at one rate of evaporation exactly what the result of a test will be at another rate of evaporation. Even if the air supply be measured, single results will be apt to be very irregular.

23. But when changing an old plant or building to a new one it is often necessary to make some assumption as to whether the addition of a given amount of heating surface will save enough coal to pay interest on its cost and other charges. It is believed that the above formulæ will be of practical value in such cases and that the chances of success will be greater than with any other form.

24. Unfortunately no great series of tests like those of Isherwood's have been made in late years. In Fig. 125, however, are presented practically all of the tests given by Mr. G. H. Barrus

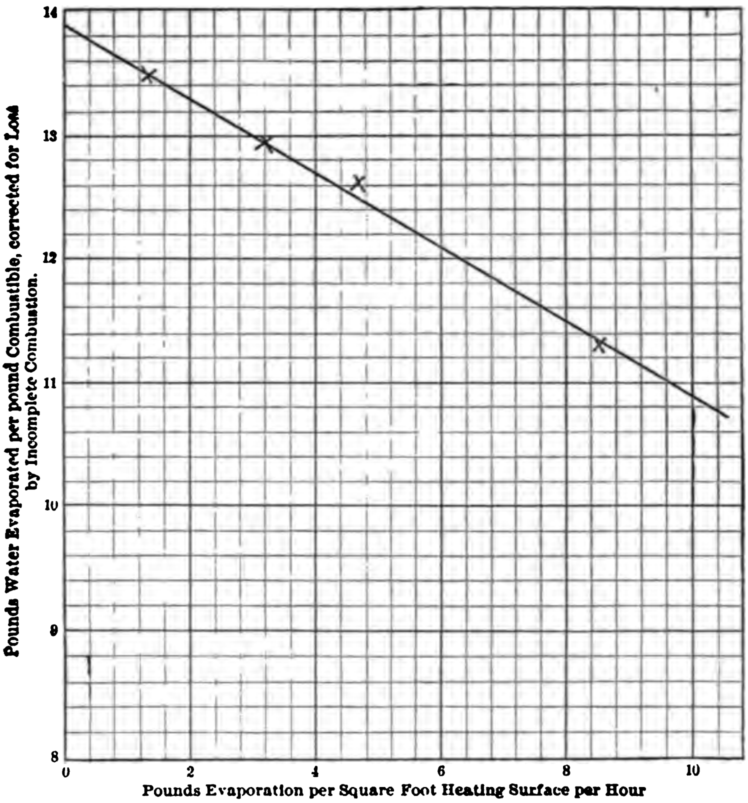

FIG. 126. — A. B. W. KENNEDY.

Tests of a Thorneycroft Boiler; Proceedings of Inst. of Civil Engineers, Vol. XCIX, p. 57.

in his book on boiler tests, in which anthracite coal was used. The two curves represent the formulæ,

$$Ea = 13 - .6\frac{W}{S};$$

$$Ea = 13 - .6\frac{W}{S} - \frac{1.5}{\frac{W}{S}};$$

the first being with no allowance for radiation, the second being with an allowance of 5 per cent. at a rating of 11½ square feet per boiler horse-power.

25. Professor Kennedy,* in 1888, made a series of four complete tests on a Thorneycroft boiler, which so beautifully illustrate the formula proposed that the paper will conclude with them.

---

* *Proceedings*, I. C. E. (British), XCIX., p 57.

The four tests and the straight line they indicate are given in Fig. 126.

The line shows but very slight tendency to droop towards the origin at the left. Hence this indicates a very small radiation. To check this we have the heat balances as calculated by Professor Kennedy from the analysis of the coal and the gases, and we find that he accounted for all but 1.9 per cent., 3.6 per cent., 2.3 per cent., and 3.9 per cent. of the heat of the coal in the steam, in the hot gases, and in imperfect combustion by burning to CO. As we know there must have been some solid matter in the smoke, etc., the heat balances fully bear out the indications of the curve, that the radiation was very small. Hence the formula may be taken without sensible error as being,

$$Ea = B \times Ep - A\frac{W}{S};$$

and the line indicates that $B = 13.88$,
and that $A = .3$

We cannot calculate A except from Fig. 126, since we do not know a in formula (35), but we have a check for B from formula (34).

In Professor Kennedy's tests K was 14,900, t averaged 309, c was .24, and f averaged 18.6, whence $B = .907$ and $B \times Ep = 14$, as compared with 13.88 deduced from the curve.

It is to be noted that this calculation depends on all four experiments. An error in the very high evaporation reported in the test at 1.24 pounds per square foot of heating surface would only indicate that the radiation was larger, and would affect B in the formula hardly at all.

DISCUSSION.

Mr. W. W. Christie.—The following figures are taken from test reports in my paper on the efficiency of the boiler grate:

The average of 10 tests of horizontal boilers, 11.52 square feet of heating surface per 1 horse-power developed. Ratio, 45.55 : 1—heating surface to grate surface.

The average of 22 tests of vertical boilers, 10.42 square feet of heating surface per 1 horse-power developed. Ratio, 48.85 : 1—heating surface to grate surface.

On page 341 of *Engineering News*, November 26, 1896, I would call attention to the use by Dean & Main of the large ratio of 85 to 1, because coal to be burned was a prior consideration to the grate area—it being expected that the boilers would be rushed.

Dr. Chas. E. Emery.—A collation of the writings and investigations of different authors in relation to a subject of engineering interest may be of great value if the apparent contradictions be analyzed and the results formulated, so as to include features settled by all the authorities. In the paper under discussion, the very considerable meritorious labor performed by the author is marred by the fact that relative weight has not been given to the different authorities quoted, so the evident contradictions make the subject appear in an unsettled state, and tend to produce confusion. The author discusses first Rankine's formula, which is of course entitled to respect, but being based on mere elementary data and expanded therefrom, cannot have the force of direct experiment upon the subject under discussion. Mr. Isherwood's averages and generalizations presented in Fig. 117 are based merely on a table prepared at an early date from data varying within comparatively narrow limits, and the upper limits were evidently based upon judgment or insufficient data, and are therefore inaccurate. The Clark and Carpenter formulæ are incorrect in form, as stated in the paper, and therefore not fitted for generalizations outside the limits of the particular experiments upon which they are based.

Previous to the year 1866 the investigations on the relative value of greater or less proportion of heating surface in boilers were confined to a few experiments through a limited range, which made it impracticable to formulate the general results in a practical manner. In the years 1865–66, however, experiments were made with a vertical tubular boiler of the Martin type, in which the heating surface was progressively reduced until nothing was left but the furnace and uptake, and positive evidence became available on the subject. This work was doubtless initiated by Mr. Isherwood, but carried out by civilians and naval officers jointly and reported to the Navy Department; but the results of the experiments were not generalized and formulated previous to my article on "Boiler Proportions" in the report of the judges of Group XX., Centennial Exhibition. I there gave a formula which fairly represented the phenomena, and a form of curve was selected which could not only be carried through the points by varying the constants, but which was correct at the limits. Such curve, with the rate of combustible per square foot of heating surface per hour as abscissa and the units of evaporation as ordinates, should necessarily have a maximum value when the rate of combustion per square foot of heating surface approached the limit, viz.: 0; and such evaporations decrease slowly as the rate of combustion increased, but should never reach 0; hence that branch of the curve was an asymptote. These conditions were fulfilled by using a hyperbolic curve. The equations given in the report stated, repeated also in the *Transactions* of this Society, volume xvii., page 269, therefore represent the results of the best experiments available, and in a way that the formula should be applicable through any limits. The preponderating weight of evidence should be given to these unequalled experiments, and the formula I gave is the only one which fully represents the same. The value of the other formulæ in the paper may therefore be judged by their correspondence with these experiments. Unfortunately the author of the paper has presented the results on a different basis than that employed by Rankine and by myself, and uses the evaporation per square foot of heating surface, instead of the combustible per square foot of heating surface as the abscissa. With his method of presentation both the abscissa and ordinates contáin a common factor. The ordinates are the units of evaporation per pound of combustible. The abscissa are the units of evaporation per pound of combustible multiplied by the combustible per square foot of heating surface. This makes the equations much more involved than in the form presented by Rankine and myself. Rankine's formula, founded only on elementary data, reduces to a simple equation of a straight line, as given by Mr. Hale, but the formula given by me does not so reduce, and the difference is important, particularly when it is desired to reach very high evaporations per square foot of heating surface. The inaccuracies resulting from the use of constants based on a few experiments and applied to Rankine's formula are shown by comparing corresponding results in the table at page 81, General Report of Judges of Group XX., based on my formula, with those given in Fig. 116 by Mr. Hale. For 22 pounds evaporation per square foot of heating surface per hour Mr. Hale gives for different boilers with Rankine's formula evaporations per pound of combustible varying as follows: 2.2, 3.4, 7.2, 7.8 approximately, whereas my formula gives 5.5. Again, for 5 pounds evaporation per square foot of heating surface, Fig. 116

gives as pounds of water evaporated per pound of combustible, 10.8, 12, 12.3, and 13.1 approximately, whereas my formula gives 12.41. It is evidently not possible that different boilers can give such wide variations as shown by the first of these illustrations, and only badly proportioned boilers could show the variations shown by the second illustration. Referring to Fig. 117, Mr. Isherwood's results for low evaporations, based on actual results, do not vary greatly from those given by my formula; but for 13.7 pounds evaporation per square foot of heating surface his original curves only work out 6.4 pounds of water evaporated per pound of combustible, whereas my curve, based on the later experiments, shows that 9.13 pounds were actually obtained. The results given by my formula are those which have been actually obtained in practice under the very rigid conditions stated, and may therefore be relied upon as approximately a true solution of the problem. The results are lower in other cases, as shown in relation to the steam boilers tested at the Centennial Exhibition, page 73 of the Report. Nevertheless the formula shows what is possible under the best conditions and the true law of variation under such conditions.

Mr. Geo. I. Rockwood.—I notice in paragraph 18, in speaking of a combination of economizers and boilers, the author says: "If in addition to or instead of changing part of the boiler heating surface to economize heating surface, the total amount of heating surface should be increased by adding an economizer, then there will be an additional gain. The questions of relative first cost, depreciation, reliability, etc., of economizer or boiler heating surface are beyond the scope of this paper, but unless these considerations interfere, the proportion of economizer heating surface should obviously be as large as can practically be operated." And then he goes on to speak of the Lancashire boiler. Now that touches upon the question of whether economizers are wise investments in this country or not, and in relation thereto I might say that this summer I looked into this matter a little. The fact that the economizer is so largely used in England has often been adduced as a reason why we should use it, and I think it is very important to know the difference between the reasons which actuate us, and the reasons which actuate the Englishmen in using the economizer. The reason in England is this, that a Lancashire boiler costs three times as much per square foot of heating surface as the economizer does; hence, buy as much economizer and as little boiler as you can.

That is all there is to it. Now in this country boilers cost a little more than one-half what we have to pay for economizer surface; hence, in America, buy as much boiler and as little economizer as you can. So that these questions of first cost, depreciation, and so on, do enter into the problem in this country and also in England, but in quite different ways. I question whether, if we do our utmost to heat feed-water with exhaust steam from auxiliaries and by the use of proper heaters, or utilize the steam from the receivers in compound engines in large cotton mill plants, and utilize our American boilers where the cost per horse-power is about one-fourth of what it is in England—I question whether we have got sufficient use in the average mill plant in this country for an economizer. I admit, however, that the economizer has a place in certain directions, as in street railroads, or wherever the power is very variable and very large.

Mr. William Kent.—Mr. Hale's paper is an exceedingly interesting one, and we should be indebted to him for having put into the shape in which he has the formulæ of Rankine, Isherwood, Clark, and others, so that a comparison may be made between them. The subject is one to which I have given considerable attention, and I have placed in Fig. 127 some results of my studies which were first published in *Van Nostrand's Magazine* in August, 1884, in a paper on "The Evaporative Power of Anthracite Coal," and are now revised and put in the form here presented. I have placed in the diagram, together with the location of Mr. Hale's curve based on five per cent. radiation, the results of the tests made at the Centennial Exhibition, and the extreme results given by Mr. Hale in Fig. 125, as taken from Mr. Barrus's tests with anthracite, reported in his book on Boiler Tests. The abscissas are water evaporated from and at 212 degrees per square foot of heating surface per hour, and the ordinates show the economy of the boiler, expressed in water evaporated from and at 212 degrees per pound of combustible. The Centennial tests were made by a commission of which our Mr. Emery was chairman, in Philadelphia in 1876 (see Report of the Judges, Group XX.), and they were made under very strict regulations, with the same kind of coal and every condition, so far as possible, equal; the only difference being that the boilers were different. Each boiler-maker, I believe, had the right to determine at what rate of combustion or what rate of evaporation his boiler should be run to give its maximum economy. There were two tests made of each boiler, one for economy and one for capacity, and it is the results of these tests which I have plotted in my diagram. While these tests were made twenty years ago, I think they are the most valuable series of tests which we have on record to-day. No better series of tests has been made since, and we have learned practically nothing more about anthracite coal than we knew then; so that whatever we learned in 1876 holds good to-day, and in all my studies of boilers since that time I have not been able to come to any different conclusions than those drawn from the Centennial tests, which conclusions I will try to explain.

Five boilers in the Centennial tests came so near the head in the competition that the difference between them was within the possible errors of apparatus or observation. That is, they came within about 2 per cent. of the same result. They were the Firmenich, the Root, the Lowe, the Babcock & Wilcox, and the Smith.

The question raised in the paper of Mr. Hale is, What relation does the rate of evaporation bear to the economy? Now in the Centennial tests each boiler was tested at two rates of evaporation. If it had been tested at three or four different rates we might plot the results and get a curve for each boiler, expressing this relation; but having only two rates we get a straight line. Therefore the diagram shows a number of straight lines, one for each boiler tested. The following table gives the results of the Centennial tests which are plotted in Fig. 127.

RESULTS OF BOILER TESTS AT THE CENTENNIAL EXHIBITION, 1876.
Pounds water evaporated from and at 212 degrees.

NAME OF BOILER.	CAPACITY TESTS.		ECONOMY TESTS.	
	Per sq. ft. heating surface per hour.	Per lb. combustible.	Per sq. ft. heating surface per hour.	Per lb. combustible.
Wiegand	4.198	9.145	3.800	10.834
Harrison	4.151	9.889	3.157	10.930
Firmenich	2.287	11.064	1.932	11.938
Rogers & Black	5.802	9.429	3.941	9.613
Andrews	4.000	9.745	2.665	11.039
Root	3.207	10.441	2.586	12.094
Kelly	5.426	8.397	4.395	10.312
Exeter	2.383	9.974	1.592	10.041
Lowe	3.171	11.163	2.149	11.923
Babcock & Wilcox	3.840	10.830	2.791	11.822
Smith	3.739	11.925	2.785	11.906
Galloway	5.413	11.216	4.178	11.583
Anderson	4.108	9.568	3.034	10.618
Pierce	6.698	9.865	5.106	10.021

NOTE.—In the original report of these tests the rate of evaporation per square foot of heating surface is given in pounds evaporated from 100 degrees temperature of feed into steam at 75 pounds pressure. In the above table the figures in the report have been multiplied by the factor of evaporation 1.15 to reduce them to the standard now universally used, viz., "from and at 212 degrees."

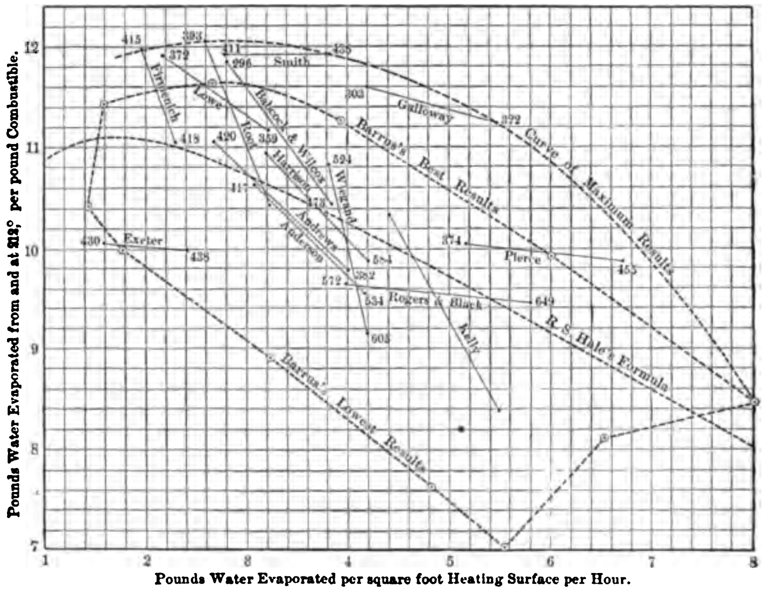

RELATION OF RATE OF EVAPORATION TO EFFICIENCY. ANTHRACITE COAL.
Centennial Tests, Barrus's Tests and R. S. Hale's Formula Compared.

The figures are the temperatures of uptake in the Centennial Tests.

Hale's Formula is $Ea = 13 - \frac{.6W}{S} - \frac{1.5}{\frac{W}{S}}$, in which Ea = evaporation per pound combustible, and $\frac{W}{S}$ = evaporation per square foot heating surface per hour.

FIG. 127.

Let us look now at the line showing the results of the tests of the Firmenich boiler. At 2.28 pounds of water per square foot of heating surface per hour, it gave about 8 per cent. lower economy than it did at a rate of 1.93 pounds, and the line joining the two tests is only slightly inclined from the vertical. The Smith boiler, on the contrary, gives a line which inclines a trifle above the horizontal. Here is a direct contradiction of the law indicated by the Firmenich boiler tests, and of the generally accepted law that increasing the rate of evaporation decreases the economy. The Firmenich, Root, Wiegand, and Kelly boilers show a rapid decrease of economy with increase in the rate of driving, while the Exeter, the Rogers & Black, and the Pierce show a very slight decrease, and the Smith actually shows a slight increase.

We may learn a great deal from these straight lines expressing the results of the Centennial tests, but they also indicate the extent of our ignorance. It is unfortunate that these tests were not made at three or more different rates of evaporation instead of two. We could then have drawn curves instead of straight lines, and the following questions might have been answered, which it is now impossible to answer accurately, although the straight lines indicate an affirmative answer in each case, if we assume that each straight line is extended at one or both ends. 1. Would the Babcock boiler have beaten the Root on the economy test if the two boilers had been driven at the latter's rate, 2.6 pounds? 2. Would the Lowe boiler have beaten the Babcock on the capacity test if both had been driven at the rate of 3.8 pounds? 3. Would the Wiegand have beaten all the other boilers at a 3-pound rate, and would it have been beaten by all the other boilers, the Firmenich excepted, if it had been driven at 4½ pounds? 4. Would the Kelly boiler have beaten the Galloway at a 3½ pound rate? Would the Smith boiler have beaten all the others at 5 and at 6 pounds?

From the Centennial tests we learn further that there is a little field, within the limits of 1.9 and 3 pounds evaporation per square foot of heating surface per hour, in which five boilers of different construction—viz., the Root, the Firmenich, the Babcock & Wilcox, the Smith, and the Lowe boilers—gave an evaporation of between 11.8 and 12.1 pounds per pound of combustible, and that the Galloway boiler would probably have entered this field if a test had been made at as low a rate as 3 pounds. These figures 11.8 to 12.1 pounds are probably close to the maximum figures which can be obtained by any boiler, not provided with an economizer, burning anthracite coal.

In addition to the Centennial tests I have plotted on the diagram the results of Mr. Barrus's tests with anthracite coal, as shown in Fig. 125 of Mr. Hale's paper, taking only those tests which lie on the boundary of the field covered by the fifty or more tests shown by Mr. Hale. I have also plotted Mr. Hale's curve in Fig. 125, derived from the formula given on page 347 of his paper:

$$Ea = 13 - .6\frac{W}{S} - \frac{1.5}{\frac{W}{S}}.$$

This curve represents about the average of Mr. Barrus's results, if we leave out five of them which seem exceptionally low. It can scarcely be said, however, to represent the average of the Centennial tests, either in position or direction. On the upper boundary of all the tests a curve, entitled curve of maximum results, is drawn, passing through four of the Centennial tests and the one test by Mr. Barrus at the high rate of evaporation of 8 pounds per square foot of heating surface per hour. This curve represents the probable maximum results which can be obtained with anthracite coal under the very best conditions, between the rates of evaporation of 2 and 8 pounds. Perhaps Mr. Hale, or some other one of our members who is skilled in the art of making formulas to fit given curves, may give the formula for this curve. The data upon which the formula should be based are the following five points:

Abscissas.........	1.932	2.586	3.739	5.413	8.
Ordinates.........	11.938	12.094	11.925	11.216	8.45

From the curve as here drawn, the following approximate values are obtained:

Lbs. water evaporated from and at 212° per sq. ft. heating surface per hour.	1.7	2	2.6	3	3.5	4	4.5	5	6	7	8
Lbs. water evaporated from and at 212° per lb. combustible.	11.9	12.0	12.1	12.05	12	11.85	11.7	11.5.	10.85	9.8	8.5

Now summing up the results of this study, what do we learn from it? Plainly that the relation of the rate of evaporation to the efficiency of steam boilers cannot be expressed satisfactorily by any curve or by any formula, but only by an area of considerable breadth. The general shape of this area, as shown on the diagram, is oblong, and inclining downwards to the right, but the transverse dimension of this area is so great that if we draw a curve expressing its average direction any individual test may have an efficiency of as much as 20 per cent. above or below that represented by a point on the curve taken at the same rate of evaporation as that of the test. The curve of maximum results represents the extent of our knowledge concerning the efficiency which it is possible to obtain under exceptionally favorable conditions; the width of the area represents the depth of our ignorance as to how to obtain the best conditions. We will probably not be able to increase our knowledge concerning the conditions which govern the efficiency of boilers fired with anthracite coal by further study of the records of the past, but with what we have as a starting point, and knowing something as to the extent of our ignorance, we are now ready to increase our knowledge by making new experiments.

We now know that with one boiler we can get sometimes an increased efficiency by rapid driving, and with another boiler or with the same boiler at another time we get the exactly opposite result. The thing now for us to do is to look into the causes which control the results. There are some causes other than simple rate of evaporation, such as the shape of the flame passages and the tube area, or the rate of draft in its relation to the amount of coal burned, or a combination of different causes, which complicate the results. But by study of tests to be made in the future we may get some knowledge of how to proportion boilers so as to get the best results.

What is the lesson to be learned from the Centennial tests? Here were fourteen different boiler manufacturers, each thinking that he had the best boiler. When we came to test them we found some extraordinarily low results. If we take a certain make of boiler to-day and go at random among the different customers who use it, and make tests without the knowledge of the maker of the boiler, we will find just about the same heterogeneous results which we had in the Centennial tests. That is, take any boiler of well-known make and good reputation, and find how that boiler is used in practice, and we will find results like these, and no man living knows why. The reason why has not been investigated. What we do not know about boilers to-day would fill a big book. But we have made one step in advance in the knowledge of boilers if we know something of the extent of our ignorance, and that is that the law of the relation of the rate of evaporation to efficiency is expressed by a wide field, instead of by a straight line or by a formula.

Mr. Pearson.—Speaking of boilers, and getting at the law of efficiency, I should suppose the locomotive had shown us that it is utterly impossible to establish a law or rate which will be at all accurate. I do not think there is any concern to-day using locomotives, who have placed an order for two or more all of the same type, who have put them in the hands of the same engineer, same fireman, upon the same division the same day, and have obtained equal results.

Mr. Edward J. Willis.—My experience with a stationary plant is very similar to those which have preceded.

In the Richmond Traction Company I have scales in the boiler-room and a Worthington meter on each boiler. Records of coal and water are taken each shift. Under these conditions the continuous records of several months give a very good opportunity for watching the evaporation. I find that this is by no means constant, even with the same boiler, same load, same coal, and same fireman; indeed I regard with suspicion duplicate results. I find variations of from one to three tenths of a pound under the same conditions, so far as I can see, and I have been absolutely unable, even with careful study, to locate their cause. These changes occur from day to day, one way or the other, and are apparently not connected with any other events or conditions.

Mr. Wm. Barnet Le Van.—I am pleased to hear Mr. Kent refer to the Centennial tests of boilers as being the best and most reliable boiler tests made. I claim to know much about those tests from the fact that I was present when each boiler was tested, and never left the boiler-house while the tests were going on. When no trials were made I slept on the flues leading to the chimney, and ate my meals standing at the stand of the platform scales when the tests were in progress. I made a memorandum of every trial made, and at the end of each test compared it with Mr. E. M. Hugentobler's notes, who had charge of the trials.

Mr. Kent left out several boilers in his original sketch whose evaporation exceeded some of those mentioned and shown in his sketch, notably the horizontal flue boiler of Mr. William Lowe, of Bridgeport, Conn., and the Galloway, of England. The Lowe boiler, on the economy trials, evaporated 11.923 pounds of water per pound of combustible into dry steam, whereas the Babcock & Wilcox mentioned by Mr. Kent evaporated 11.822 pounds per pound of combustible; moisture of steam, 3.24 per cent.

The following table shows the result of the economy trials of boilers at the Centennial tests:

	Pounds of water evaporated from and at 212 degrees per pound of combustible.
Wiegand	10.834
Harrison	10.930
Firmenich	11.988
Rogers & Black	9.613
Andrews	11.039
Root	12.094
Kelley	10.312
Exeter	10.041
Lowe	11.923
Babcock & Wilcox	11.822
Smith	11.906
Galloway	11.553
" Bituminous coal	12.125
Anderson	10.618
Pierce	10.021

From the above table it will be seen that when anthracite coal was used the best results were made by the Root boiler, whose steam was perfectly dry. The Firmenich was second, also dry steam. The Lowe was third in order, evaporating 11.923 pounds of perfectly dry steam. The fourth was the Smith, and the fifth the Babcock & Wilcox, with an evaporation of 11.822 pounds of water, with a percentage of moisture of 3.24 per cent.; the sixth, the Galloway, 11.583, with 0.57 per cent. of moisture.

Mr. John Platt.—I just want to make one or two remarks on this subject, and first of all to refer to the question of the Lancashire boilers and economizers. Mr. Rockwood referred to the use of the Lancashire boiler, so universal in England, and the economizer with it. Perhaps there is one very good reason why the Lancashire boiler is used there, and that is from the fact that so very often the water is very bad indeed and no other boiler will do. An externally fired boiler is bad, and they use a Lancashire boiler because they can get inside of it every two or three months, and they then sometimes take off two or three inches of scale. I have found upon English boilers six or eight inches of scale. Perhaps this is one reason why the water-tube boiler people have rather a bad time of it over there, and do not do anything like the business they do in this country.

Referring to the paper. Mr. Hale mentions at the end of the paper Professor Kennedy's tests of the Thorneycroft boiler. I would like to refer to this from the fact that I have heard it spoken of here several times. I do not think it is generally known how the tests were made. I know that Professor Kennedy's method of making these tests has been questioned very much. Probably the reason is that it is one of those unfortunate tests, or perhaps fortunate ones, in which the result is very high indeed. The efficiency was as high as 86.8 per cent., with an evaporation of over thirteen pounds. Mr. Kent does not like this sort of thing, and perhaps I had better not say anything more about it; although I will venture to say that inside of two years Mr. Kent himself will be able to give to this Society the reasons, based upon a good many of the facts brought forth in this paper, why the result can be obtained. Referring to the tests, they were made in a torpedo boat under active service. The conditions there are quite severe and peculiar, and Professor Kennedy could not have done anything differently from what he did in this case. I had the pleasure of serving with Professor Kennedy for two or three years, and I know how very careful he is. He has probably made as many tests as any one living, and no one could take more care than he does. I am convinced that the test was as carefully made as it could be under the circumstances.

The question of the efficiency of boiler heating surface is one which I think Mr. Kent will say something about later, and I have come to the conclusion which he has stated, namely, that the method of taking off the gases has quite a good deal to do with it—a good deal more than people think. I have been able to observe it in the last twelve months in the case of one or two boilers. They are marine boilers, but still the results would be the same. It is a question as to whether the gases are taken off with a fore and aft movement, or vertically, and making them touch the heating surface at every point. The very general method is to take them with the fore and aft movement. But Mr. Thorneycroft, who has probably made more experiments and spent more money—outside of the Babcock & Wilcox Company—

than any one else, has worked on the line of conveying the gases between walls of tubes right straight up and then down and into a central chamber. In that way, I think he has been able to get the very excellent results which have been obtained with his boiler. Again, the question of the circulation in the boiler has a great deal to do with the final result. This, of course, is a marine boiler with very small tubes, and the circulation in it is like a jet from a small fire-engine. There is a model of one of these boilers which was prepared to demonstrate to the Lords of the Admiralty on the other side the kind of circulation which takes place. The top drum is fitted with glass ends so that it can be observed. This model can be seen at 77 Cedar Street, New York, by any member.

Mr. Le Van.—In regard to economizers. The Galloway boilers are now set so as to pass their products of combustion over the top of shell, thereby dispensing with economizers.

Furthermore, I have found that setting horizontal boilers above the grates 36 to 42 inches has made a gain of 5 to 10 per cent. in fuel, by insuring a better combustion, and positively assuring the thorough commingling of the fuel gases and the atmospheric air which enters through the perforated fire door.

Mr. A. A. Cary.—As to differing the distance between the grates and the heating surface I found that was very necessary with different kinds of coal. I have to do with coals all over the United States, running all the way from the lignite, and even lower than that—from all kinds of poor refuse-fuel up to the best anthracite coal. I find that I have to vary the distance between my heating surface and my grate to accommodate the conditions to the fuel used, and I have had cases where boilers have shown very poor economy and have changed just merely by that single change. In this case it was raising the tubes higher from the grate, and I succeeded in getting splendid economy out of the boilers that had been giving very poor service.

In my judgment the gas-producer is the coming thing for close running. I have succeeded in getting very good results with its use.

*Mr. R. S. Hale.**—In reply to Mr. Emery, I may state that in my paper I was considering chiefly the kind of formula to use, and not, except incidentally, the constants.

Mr. Emery's formula is of exactly the same kind as Rankine's

---

* Author's closure, under the Rules.

except for its last term. This last term in Emery's formula makes it, like Clark's and Carpenter's, incorrect at the extreme lower limits, while if the last term be omitted, only a small change is necessary in the other constants to make the formula fit the experiments nearly as well as before. The fact that Emery's empirical formula, based on probably the longest and best series of experiments yet made, agreed so closely with Rankine's theoretical formula, is, I think, one of the strongest endorsements of the latter. When two formulæ agree so closely it is of course best to choose the theoretical one for investigation, since it lends itself more readily to discussion of the other factors that affect the economy. For instance, the discussion of the effect of different boiler pressures on the economy (§ 17 of my paper), is very easy with Rankine's form but impracticable with Emery's.

In reply to Mr. Rockwood. Even if the economizer costs more here than the boiler, yet it may pay. Take a boiler at 160 pounds pressure, or say 375 degrees temperature of the steam. If the gases leave at 500 degrees, then the temperature difference where the gases leave the boiler is 125 degrees. The water in the economizer is, however, we will say, 200 degrees, and the temperature difference there is 300 degrees. Then even if the flow of heat were proportional to the difference of temperature only, the economizer heating surface would be $\frac{300}{125} = 2.4$ times as efficient as the last part of the boiler heating surface. Blechynden's and Wiebe's experiments, however, indicate that the flow of heat is proportional to the square of the temperature difference, in which case the economizer surface is 5.8 times more efficient than the boiler surface. Besides, is not Mr. Rockwood exaggerating a little when he says we can buy boiler heating surface for one-half what we pay for economizer heating surface of the same quality?

I fully agree with Mr. Kent that the results of actual tests, if you only consider the efficiency and the evaporation per square foot of heating surface, would be found enclosed in a certain area and not along a line. I think the reason for that is that the air supply and the efficiency of combustion are different in these tests. He says that we cannot measure the air supply. We cannot measure it exactly, but we can measure it pretty closely, and I do not think it is fair to say that there is not any law until we have measured the air supply, and found out whether that is not the reason why these tests vary so much on one side or other of the line.

This same answer applies to Messrs. Pearson's, Willis', and Cary's discussions. As I showed in sections 13 and 22, a small change in the air supply per pound of coal has a large effect on the economy, and really it is more incorrect to compare two boiler tests, without knowing the air supply per pound of coal, than it is to compare them without knowing the rate of evaporation per square foot of heating surface. If we don't measure the air supply we can only compare the averages of a large number of tests. If we do that we should get Rankine's formula. Fig. 160, which I take from Mr. Geer's paper in *Power*, of February, 1897, shows the average of a large number of tests from Mr. Barrus's book on "Boiler Tests." The abscissas, on a scale of B. T. U. per square foot per minute, are, of course, proportional to the pounds evaporation per square foot per hour, as before, and these crosses, showing the average results, fall very close to the straight line. The extent to which the air supply, or something else, caused the individual tests that make up these averages to vary, may be seen on comparing Fig. 124 in the body of the paper, which shows the same tests separately. Mr. Geer's curve is another proof, if one were needed, that Rankine's form of curve represents the average results as closely as any yet suggested, besides being theoretically correct.*

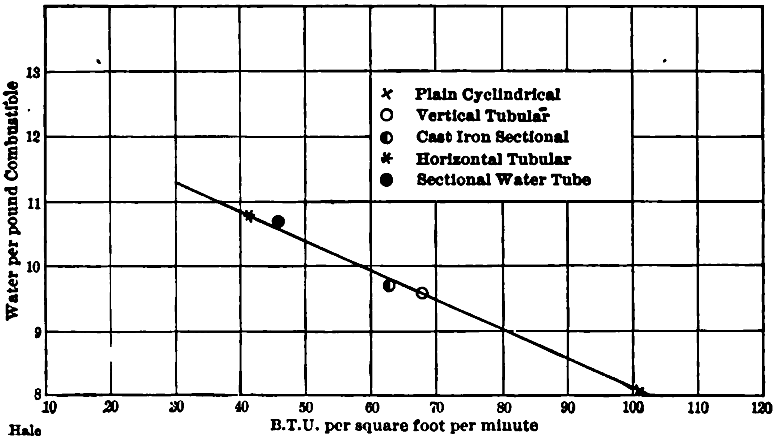

FIG. 160.

---

* Geer's curve and mine will be found to differ because Geer's includes also the tests on bituminous coal, and partly because my curve is drawn not through the average of the tests, but so as to omit the worst tests.

I may add that since writing the paper my attention has been called to Blechynden's paper (Inst. Nav. Arch., 1894) and Wiebe and Schwerhus' paper (*Zeit. für Instr. Kunde*, July and August, 1896), both of which give experiments showing that the transfer of heat between gas and water through a metal plate is proportional to the square of the temperature difference, as was assumed by Rankine and which is the basis of his formula.

DCCXVII.*

"*EFFICIENCY OF THE BOILER GRATE.*"

BY WM. WALLACE CHRISTIE, NEW YORK CITY.
(Member of the Society.)

HAVING had considerable designing pertaining to steam boilers, settings, and chimneys and flues, and using the known formulas, of course with allowances, I became deeply interested in the subject of relative size of grates to chimneys, the conditions attaching to anthracite and bituminous coal, the capacity of the grate, horse-power of boilers, etc., and felt the need of more definite information regarding them.

I collected the following data from 108 boiler tests, paying particular attention to the pounds of coal burned per square foot of grate at which the greatest quantity of water is evaporated.

These tests were all that I could obtain from various sources, and as far as can be ascertained are reasonably authentic.

In fact, the averages probably represent present practice fairly, and are, from both economy and capacity, tests made by the author and others.

The plate (Figs. 128 and 129) is the plotting of the pounds of coal burned per square foot of grate per hour as abscissæ in the upper and lower diagrams; the pounds of coal per developed horse-power per hour as ordinates in the upper diagram, and the pounds of combustible per developed horse-power per hour as ordinates in the lower diagram.

The mean lines drawn through the points in each diagram incline from each end of diagram to 13 pounds of coal burned per square foot of grate, indicating it to be the most economical rate of combustion.

---

* Presented at the New York meeting (December, 1896) of the American Society of Mechanical Engineers, and forming part of Volume XVIII. of the *Transactions*.

From the tables we have the following averages:

Pounds of coal per horse-power developed per hour...... ...	3.64
" " combustible per horse-power developed per hour..	3.04
" " coal burned per square foot of grate per hour.....	18.16

Professor Rankine says: "The rate of combustion in factory boilers is 12 to 16 pounds of coal to the square foot of grate."

Dr. Thurston says in boiler trials: "In land boilers it is customary to keep the rate of combustion per square foot of grate down to about eight pounds per hour, although it frequently rises to 10 or 12 pounds."

The preceding diagram shows that 13 pounds of coal burned per square foot of grate per hour of either anthracite or bituminous coal gives the greatest economy in evaporation.

The greatest amount of anthracite coal found to have been burned per square foot of grate per hour was 33.70 pounds; the least, 4.70 pounds.

The greatest amount of bituminous coal found to have been burned per square foot of grate per hour was 57 pounds; the least, 6 70 pounds.

Land stationary boilers are the only ones considered in the paper.

The pounds of combustible per horse-power per hour was noted especially because of its giving a fairer way of comparing the economy of different boilers, and is, I believe, in accordance with the views of Dr. Emery.

It will be readily seen from the chart and averages that less than 4 pounds of coal in the most of cases is that which is required to be burned per hour to produce one horse-power; and as 13 pounds of coal burned per square foot of grate is a most economical rate of combustion, 13 divided by 4, or 3.25 horse-power per square foot of grate per hour, is economically attainable.

The above is for anthracite coal. For bituminous coal, as 23.8 pounds burned per square foot of grate is an economical rate of combustion, 23.8 divided by 4, or 5.95 horse-power per square foot of grate per hour, is economically attainable.

The average of 13 and 23.8 is 18.4, which is very near 18.16, the average of all the 108 tests.

It certainly is understood that the above figures may have need of variance for special coals or conditions, and are only intended to give averages.

The 23.8 is a derived constant obtained by multiplying 13 × 1.83 (a coefficient subsequently deduced), and 1.83 agrees with Mr. Harris' rule for grate area for bituminous coal burned with natural draft, and by reference to the diagram it can easily be seen that it is a very economical rate of combustion (23.8) for bituminous coal.

CHIMNEYS.

In accordance with the following rules deduced from the following notes regarding boilers and chimneys, which gave very good results, the writer has calculated full tables for grate surface for both anthracite and bituminous coal, coal to be burned per hour, and horse-power of chimneys.

A horse-power is understood throughout this paper to be the A. S. M. E. standard of 34½ pounds of water evaporated per hour from and at 212 degrees Fahr.

	Coal per hour per sq. ft. of grate.	CHIMNEY.				Coal per hour, lbs.	$\frac{C}{\sqrt{H}}$	$\frac{X}{A}$ = Coefficient.	Grate Area, sq. ft.	$\frac{\text{Length}}{\text{Diam.}}$ of chimney.
		Diam. ft.	Height, ft.	Area, sq. ft.	$\sqrt{H}$.					
		D	*H*	*A*		*C*	*X*		*G*	
Anthracite Coal Records.	15.00''	3.5	80	9.62	8.9	1154.4	129.70	13.48	77	22.85
	15.00	1.75	63.5	2.40	8	279.3	34.9	14.54	18.62	36.28
	7.19	1.75	63.5	2.40	8	133.8	16.72	7.00	18.62	36.28
	4.71	3' □	80	9	8.9	334	37.41	4.15	20.25	26.66
	14.89	3.5+	50	10	7.1	1191.25	167.77	16.77	....	16.00
Average......	11.35	.....	....	.....	...	....	......	11.38	....	.....
Bituminous Coal Records.	30.4	$3\frac{1}{6}$	67.5	7.75	8.22	1067	128	16.51	35	21.36
	40.4	$3\frac{1}{6}$	67.5	7.75	8.22	1414	172	22.19	35	21.36
	35.4	$3\frac{1}{6}$	67.5	7.75	8.22	1241	151	19.50	35	21.36
	33.07	$3\frac{1}{6}$	67.5	7.75	8.22	1158	141	18.20	35	21.36
	24.56	$4\frac{1}{6}$	92	13.63	9.6	1179	122.81	9.01	48	30.66
	22.20	$3\frac{1}{6}$	67.5	7.75	8.22	777	94.54	12.20	35	21.36
	40.12	$3\frac{1}{6}$	67.5	7.75	8.22	1404	170.79	22.03	35	21.36
	29.47	2' □	75	4	8.60	700	81.39	20.34	47.5	38.50
Average......	31.95	.....	....	.....	...	....	......	17.49	....	.....

By assuming that

coefficient × $A\sqrt{H}$ = coal per hour in pounds,

then coefficient × $A\sqrt{H} = G$ × coal per sq. ft. of grate per hour. We then see, from the following tables, that for anthracite coal the coefficient equals the coal burned per square foot of grate, and that for bituminous coal the coefficient equals the coal burned per square foot of grate divided by 1.83.

From the above we have the following empirical rules:

Grate area $= A\sqrt{H}$ for anthracite coal. . . . . . (1)
" " $= A\sqrt{H} \div 1.83$ for bituminous coal. . . (2)
Pounds of coal burned per hour $= 13 \times G$. . . . . (3)
Horse-power of chimney $= 3.25\ A\sqrt{H}$. . . . . . (4)
A = area of smallest section of flue in inches.
G = grate area in square feet.
H = height of chimney in feet.

For a chimney with 48-inch diameter or 43-inch square flue by 100 feet high, we should have by the above rules the following:

Grate area for anthracite coal, 126 square feet.
" " " bituminous coal, 69 " "
Pounds of coal burned per hour under boilers, 1,638 pounds.
Horse-power of boilers for chimney, 410.

Kent's table gives 348 horse-power of boilers for the same chimney, while he gives no way of getting at the size of grate to be used in connection with a certain size chimney.

The results obtained by using the above tables agree fairly well with the latest American practice and with English practice as well.

The writer does not touch the question of relation of flue area to height of the chimney to give the best results for different coals, as he has already trespassed beyond the ground of "Economy of the Grate," and hopes that others who have had a larger experience will give the facts in their possession regarding the actual working of chimneys and grates in discussing the subject.

Number.	Total Rated Horse-power.	Horse-power Developed.	Coal Burned per Hour.	Lbs. Combustible per H. P. per Hour.	Lbs. of Coal per H. P. per Hour.	Lbs. of Coal per sq. ft. of Grate per Hour.	Water Evap. per lb. of Com'ble f'm & at 212°.	Grate Area.	Size of Chimney.	Kind of Fuel.
1	240	124.26	462.60	2.95	3.72	5.93	11.67	78	....	Anth. Buckwh't.
2	50	86.64	279.3	2.76	3.22	15	12.47	18.62	21"0 × 63½'	Anth. Buckwh't.
3	50	35.7	133.8	3.24	3.74	7.19	10.65	18.62	21"0 × 63½'	Anth. Buckwh't.
4	90	122.55	477.68	3.20	3.90	15.92	10.76	......	....	Anth., No. 2 Pea.
5	130	121.91	471.15	3.21	3.86	12.08	10 73	......	....	Anth., No. 2 Pea.
6	300	188	700	3.45	3.72	29.47	10.0	47.5	....	Cumberland Bit.
7	675	941	3271	3.07	3.47	19.89	9.74	......	....	Bituminous.
8	185	219.42	735	2.70	3.34	18.07	12.76	......	....	Anth. Nut.
9	350	291.35	1191.25	3.22	4.09	14.89	10.71	......	....	Anth. Buck.
10	350	396.86	1655	3.30	4.17	20.69	10.44	......	....	Anth. Egg.
11	325	383	992.5	2.23	2.59	16.54	13.40	......	....	1 p. Bit., 2 p. dust.
12	325	367.6	940	2.11	2.55	15.60	12.88	......	....	Anth. Pea.
13	1125	1178	3396	2.64	2.88	13.8	13.03	......	....	N. Rv., lu'p & fine.
14	150	108	499.7	....	....		.....	......	....	Cum., r'n of mine.
15	416	522 8	1670	2.85	3.19	24.14	10.91	......	....	Bit. Lump.
16	187	231.61	951	3.39	4.10	14.68	11.49	......	....	Anth. Buck.
17	250	312.12	973	2.71	3.11	16.21	11 41	......	....	Anth. Egg.
18	190	220	659	2.59	3.00	12.99	11.6	......	....	Anth. Egg.
19	488	526	1731	2.71	3.29	12.22	11.44	......	....	Anth. Pea.
20	366	502.1	1670	2 80	3.32	15.72	11.08	......	....	Anth. Pea.
21	75	56.64	217.2	2.94	3.83	11.13	11.71	......	....	Anth. Buck.
22	75	67.47	220	2.97	3.25	10.00	11.56	......	....	Bituminous.
23	125	110.47	392	3.25	3.56	15.6	10.64	......	....	Bit., run of mine.
24	125	74.24	255	3.13	3.43	7.4	10.99	......	....	Bituminous.
25	300	527.61	1777.5	2.96	3.35	17.2	11.63	......	....	Bituminous.
26	150	222.84	680.6	2.92	3.05	16.5	11.79	......	....	Bituminous.
27	400	475.88	1675	2.95	3.52	15.3	11.66	......	....	Bituminous.
28	600	644.98	2289	2.96	3.54	13.87	11.62	......	....	Bit. Lump.
29	400	326.35	1197	3.04	3 66	10.88	11.34	......	....	Bit. Lump.
30	400	217.40	740	2.85	3.40	6.73	12.09	......	....	Bit. Lump.
31	200	230.7	774	2.81	3.35	7.03	12.25	110'	....	Bit. Lump.
32	215	228.5	715.1	2.60	3.13	13.75	13.22	......	....	Anth. Buck.
33	215	156.3	540.9	2.97	3.46	5.2	11 30	104'	....	1 p. Bit., 2 p. An. B'ck
34	215	122.2	379	2.83	3.10	7.3	12 15	......	....	Bituminous.
35	250	140.4	492.4	2.96	3.51	7.19	11.68	65'	....	Bituminous.
36	250	239.5	887.5	3.15	3.70	14.3	10.92	65'	....	Anth. Pea.
37	250	319.88	1150	3.23	3.59	17.7	10.67	65'	....	Anth. Broken.
38	250	331.7	1100	2.86	3.31	17.0	12.03	65'	....	Anth. Egg.
39	250	262.5	850	2.79	3.23	13.1	12.32	65'	....	Anth. Nut.
40	250	356.1	1300	2.98	3.65	20.0	11.56	65'	....	Anth. Pea.
41	250	367.2	1350	3.13	3.68	20 8	10.99	65'	....	Anth., No. 1 Buck.
42	250	353.1	1275	3.03	3.61	19.7	11.37	65'	....	Anth., No. 2 Buck.
43	500	648.6	2252	2.97	3.47	18.7	11.59	119'	....	Bituminous.
44	416	495.05	1771	3.31	3.57	25.3	10.42	70'	....	N. Y. & C. Gas C'al.
45	416	740.3	2800	3.50	3.78	40.00	9.86	70'	....	N. Y. & C. Gas C'al.
46	416	617.7	2286	3.42	3.67	32 65	10.14	70'	....	N. Y. & C. Gas C'al.
47	250	331	1067	2.97	3.22	30.4	11.59	35'	38"0 × 67½'	N. Y. & C. Gas C'al.
48	250	399.2	1414	3.27	3.54	40.4	10.54	35'	38"0 × 67½'	N. Y. & C. Gas C'al.
49	250	365.1	1241	3.14	3.38	35.4	11.06	35'	38"0 × 67½'	N. Y. & C. Gas C'al.
50	250	353.4	1158	3.01	3.27	33.07	11.43	35'	38"0 × 67½'	N. Y. & C. Gas C'al.
51	750	697	2086	2.66	3.00	12.30	12.90	168	....	Bit. Pocahontas.
52	750	747	2325	2.75	3.11	13.71	13.09	168	....	Bit. Pocahontas.
53	750	759	2338	2.73	3.08	13.78	12.64	168	....	Bit. Pocahontas.
54	750	698	2157	2.69	3 09	12.72	12.77	168	....	Bit. Pocahontas.

Number.	Total Rated Horse-power.	Horse-power Developed.	Coal Burned per Hour.	Lbs. Combustible per H. P. per Hour.	Lbs. of Coal per H. P. per Hour.	Lbs. of Coal per sq. ft. of Grate per Hour.	Equiv. Water Evap. per lb. of Com'ble f'm & at 212°.	Grate Area.	Size of Chimney.	Kind of Fuel.
55	1000	598	2356	3.43	3.94	10.42	13.41	224	....	Bit. Pocahontas.
56	875	613	2180	3.09	3.55	11.01	13.02	196	....	Bit. Pocahontas.
57	125	123.7	372	2.67	3.00	13.16	13.09	28	....	Bit. Pocahontas.
58	125	193.6	651	2.90	3.36	23.00	12.00	28	....	Bit. Pocahontas.
59	125	126.2	416	2.82	3.29	14.7	12.82	28	....	Bit. Pocahontas.
60	125	95.4	308	2.70	3.22	10.9	12.85	28	....	Bit. Pocahontas.
61	125	85.93	308	2.98	3.58	10.9	11.61	28	....	Large Anth. Pea.
62	55	30.70	148	3.82	4.82	9.66	9.02	......	....	Anth. Pea.
63	275	277.7	1458	4.87	5.24	40.50	6.38	......	....	Bit. Coal.
64	275	401.2	2200	4.70	5.02	36 97	6.29	......	....	Bit. Coal.
65	269	369.9	1640	4.00	4.43	41	7.76	......	....	Bit. Coal.
66	269	420.9	2060	4.16	4 89	57.20	7.44	....	....	Bit. Coal.
67	....	106	334	2.95	3.15	4.71	11.67	20¼	3′ × 3′ × 80′	Lehigh Egg.
68	90	85	286	....	3.36	10.71	10.22	26.68	....	
69	200	143	700	3.81	4.96	11.66	9.93	......	....	1 p.B. sl'k, 2 p.A.C'm.
70	180	110	441	3.09	4.00	9.16	10.97	48.88	....	Anthracite.
71	180	108.6	415	2.90	3.82	8.51	10.31	48.88	....	Anthracite.
72	180	117.3	458	3.13	3.90	9.37	9.48	48.88	....	Anthracite.
73	180	108	424	3.23	3.92	8.69	9.90	48.88	....	Anthracite.
74	108	166	722	3.94	4.34	30.90	7.82	23	....	Bit. Pea & Slack.
75	500	619.7	1750	2.26	2.80	20.88	13.01	42	....	Bit. Slack.
76	627	961.4	....	3.02	3.82	22.3	11.45	165	....	Anth. Buck.
77	350	543.1	....	2.93	3.71	31.9	11.87	62	× 115′h	Anth. Buck.
78	325	580.5	1470	2.25	2.53	24.5	12.05	......	....	
79	325	470.8	1230	2.26	2.61	20.5	12.14	......	....	
80	60	109.5	402	3.47	3.67	14.26	9.94	......	36″0 × 57′	Clearfield.
81	325	331.7	1079	3.11	3.25	18.5	11.05	58.3	....	Nw. Rv. Semi-Bit.
82	325	356.1	1240	3.32	3.48	21.3	10.40	58.3	....	Nw. Rv. Semi-Bit.
83	428	611.8	....	2.88	3.38	21.5	12.02	24	× 88′	Anth. Rice.
84	428	410.5	....	2.89	3.45	14.8	11.97	24	× 88′	Anth. Rice.
85	428	691.0	....	3.30	3.75	27.0	10.46	24	× 88′	Anth. Rice.
86	100	132.3	......	3.37	3.81	20.14	10.26	25	× 116′	Anth. Buck.
87	627	935.9	....	3.09	3.92	22.30	11.14	165	....	Anth. Buck.
88	700	901.8	....	2.93	3.64	26.30	11.81	124	....	Anth. Buck.
89	190	154.3	....	3.13	3.92	30.20	11.0	20	....	Anth. Rice.
90	109	114.0	....	3.12	3.75	21.30	11.04	20	....	Anth. Rice.
91	400	500	....	3.04	3.77	33.70	11.38	28	....	Anth. Buck.
92	750	840.4	....	2.80	3.48	32.5	12.29	45	....	Anth. Buck.
93	375	553.1	... ...	2.95	3.69	45.4	11.69	45	....	Anth. Buck.
94	375	370.4	....	3.05	3.68	19.8	11.31	......	....	Anth. Buck.
95	375	581.0	....	3.24	3.98	32.9	11.00	... ..	....	Anth. Buck.
96	375	442.3	....	3.42	4.36	28.0	10.08	......	....	Anth. Rice.
97	240	259.5	....	2.93	3.23	18.4	11.76	45.5′	....	Slack, Ideal Performances.
98	240	348.2	....	2.83	3.13	23.9	12.19	45.5′	....	
99	250	468.8	....	2.90	3.22	33.2	11.90	45.5′	....	
100	240	134	345.3	2.40	2.57	9.57	11.41	36	....	Cumberland B.
101	250	258	1015	3.35	3.93	21.51	10.26	47′	....	Illinois Lump.
102	100	143	425	2.53	2.96	17.00	11.60	25	....	Bit. Lump.
103	250	257.5	777.1	2.46	3.01	22.20	13.96	35	38″ × 67½	Summerhill Slck.
104	250	416	1403.9	2.94	3.37	40.12	11.71	35	38″ × 67½′	Summerhill Slck.
105	55	93.44	280.31	3.05	3.50	18.66	11.30	15	21¼″0	Bit., run of mine.
106	200	317.11	986	2.94	3.18	26.0	11.52	38	30″0	Bit. Lump.
107	260	352	1050	2.86	2.98	27.6	12.06	38	30″0	Bit. Lump.
108	....	460.9	1588	3.16	3.44	10.97	11.17	......	4′ □	Anthracite.

DISCUSSION.

Mr. Ralph E. Curtis.—I think the title of this paper is a little misleading, because any determination of the efficiency of a grate which makes the evaporation a standard is liable to a certain amount of error by the creeping in of factors which are independent of the extent and nature of the grate surface. The writer has said that in the matter of coal he has only intended to give average conditions; but there are other variables coming in, in the form and arrangement of the furnace, and particularly in the heating surface, and with the desire, in the limited time which I have had since reading this paper, to see what effect one of those factors would have, I have plotted some tests from Mr. Barrus's book on "Boiler Tests" with particular reference to the matter of heating surface. I have plotted two sheets—one, the result of tests having bituminous coal, and the other, tests having anthracite coal, and have kept separate each group of boilers of the same general type. I have taken only such tests as seemed to be fairly free from unusual conditions. I might say that the horizontal tubular boilers, boilers of the double-deck type, and boilers of the Babcock & Wilcox general type, gave practical agreement, and that may be expected, because the ratio of heating surface to grate surface, and the subdivision of the heating surface is—broadly speaking—comparatively the same for those types of boilers; while with the plain cylindrical boilers an entirely different set of conditions prevails. In the matter of anthracite tests I found that the results for all the three types first mentioned would be fairly represented on the basis of coal per horse-power per hour, by a straight line on the 3.8 pounds of coal per horse-power line to a point of about 16 pounds of coal per square foot of grate per hour, then slightly rising. The line for cylindrical boilers, plotting on the same chart, starts considerably above the other types and rises much more rapidly. For instance, at six pounds of coal per square foot of grate there is an evaporation of one horse-power for 4.8 pounds of coal; while at 11 pounds per square foot of grate it requires 6 pounds of coal to evaporate the equivalent of a horse-power. The line for bituminous tests starts a little lower than that for anthracite, and the efficiency seems to diminish somewhat more rapidly; that is, the curve rises gradually from near the beginning (most remarkably from the point of 12 pounds of coal per square foot of grate), starting from 3.2 pounds coal per horse-power per hour, while the only tests which I have on the cylindrical type show considerable above four. Now I do not claim that these tests are numerous enough or have been analyzed closely enough to give any very definite quantitative results, but they do seem to indicate to me two things: First, that under certain conditions of arrangement of heating surface, that factor can introduce considerable uncertainty into the question of economy of combustion as determined by this method; and secondly, it would seem that instead of the maximum efficiency (the greatest evaporation per pound of coal) occurring, as the author has stated, at a point of about 13 pounds for anthracite coal and 23 for bituminous, that a different condition prevails; that is, up to say 20 pounds the evaporation per pound of anthracite coal would seem to be fairly constant, while on bituminous coal the evaporation is slightly greater per pound of coal at the lower rates of combustion, but falls off more rapidly, crossing the anthracite line at a point somewhere between 15 and 25 pounds. In this connection I would like to say that I do not entirely understand Mr. Christie's method of drawing his mean line, especially on the left-hand half of his diagram—what he calls his mean line being almost a minimum line and not a mean at all. I submit whether a fairer average of those tests would not have been obtained by a straight line on the coal diagram, on about the 3.6 pounds line to about 25 pounds, then slightly rising; and on the combustible diagram, on the straight line of 3 pounds to about 20 pounds, then slightly rising.

It seems that, separating the bituminous from the anthracite tests, as shown by the two sets I have plotted, the bituminous curve is lower at the left-hand side and crosses the anthracite curve. This points out to me only the desirability of having a larger range of tests and more specialized observation before we undertake to lay down rules for determining the proportions of grate surface or the data of combustion from such tests as these. I might incidentally say that I have been reminded, in looking around for some tests to use in connection with those in Mr. Barrus's book, of how carefully one should watch the tests he is taking. In case of certain tests I had supposed perfectly reliable I found that in figuring the coal per horse-power per hour I was getting remarkably low results, by figuring from the coal per hour divided by the horse-power; but by figuring it the other way, dividing 34½ pounds of water per horse-power by the water per pound of coal, I found that I got something quite different; and so it seems it is necessary if one would be sure of what he was plotting to go quite a little way into the tests as they are sometimes published.

Mr. William Kent.—This paper of Mr. Christie's is a very commendable effort on his part to discover the laws which govern boiler economy, even though I have to criticise it adversely. Beginning with the name—"Efficiency of the Boiler Grate"—in a literary sense the name may be all right, but in a technical, engineering sense, the grate has no efficiency. It is not a machine for doing work, and we cannot say that its efficiency is the quotient of the work got out of it by the work put in, so the title is somewhat of a misnomer. A proper title would be "The relation of the rate of combustion per square foot of grate to the economy of the boiler"; as that is what the paper is about.

He has collected data from 108 boiler tests. Going over the table I notice that the column, "Water evaporated per pound of combustible from and at 212 degrees," and the column headed "Pounds combustible per horse-power per hour," do not agree with each other arithmetically in about half of the cases. That is, there is an arithmetical error in calculating the figures in one or the other of these two columns. The product of the pounds of coal per horse-power per hour and the water evaporated per pound of combustible in about half the cases is 34½, as it should be. In other cases the product seems to be 30. It is a mathematical fact that the figures in the column "Pounds of combustible per horse-power per hour" should be exactly equal to 34½ divided by the figures in this other column—"Water evaporated per pound of combustible"—provided we agree that the boiler horse-power is 34½ pounds, which Mr. Christie himself has assumed. So the first trouble with his plotting is that he did not get correct figures to plot from. That is probably not his own mistake, but occurred by taking the figures from the reports of boiler tests, without verifying them.

The next trouble is, that in taking the 108 boiler tests he has apparently given full credence to all the tests that he has taken. If we go into the literature of boiler tests, the chances are that the results found on an average will be a little more favorable than the average results obtained in practice, for the reason that many published tests are made of boilers built to fulfil guarantees, where the conditions are favorable to good economy; and if, accidentally, a bad result was obtained, that result was not published. So the chances are that of all the tests made, a larger proportion of the good results would be published than of the bad results. In some cases, however, this is not the fact. For instance, in Mr. Barrus's book on "Boiler Tests" I believe he has published all the tests; good, bad, and indifferent. But we have to be very careful in accepting the results from other sources, because they may be selected results. They may be perfectly correct, but the bad ones may have been left out. That is one objection to drawing conclusions from these 108 boiler tests. Another objection is that there are certain tests on this list of 108 which any one acquainted with the conditions governing boiler economy should have rejected as being highly improbable, if not impossible. When we see a report of a test of anthracite coal giving 12½ pounds of water per pound of combustible, we should reject that test as incredible. If we should find one over 12.2, we should mark it as doubtful. Anything over that is more than doubtful. Anything over 12½ is simply incredible. When we come to bituminous coal, I should think anything over say 13½ pounds ought to be rejected, and if we get 13 pounds and a small fraction, we will say, "Well, if the conditions were extremely favorable it is possible it might be obtained," which would hold in the case of one of Mr. Dean's recent tests at Boston, which has been published, and which I consider to be about high-water mark. Here is an instance: the figure 13.96 for Summer Hill slack. I do not know what Summer Hill slack is, but if the report of the boiler test is correct, it must be something better than Pocahontas. So that result should have been rejected.

Then again, in plotting results, when we discover that some of the results of the economy are due to abnormal conditions, such as would be likely to make the result of a test out of the ordinary range, such results should be rejected from the plotting. If we find that a very low result is due to extraordinary rates of evaporation per square foot of heating surface—that is, that the boiler has been greatly overdriven—that result should not be included in a study of the question of what is the effect of the rate of combustion per square foot of grate. It is all right to include it in the study of the effect on economy of the rate of evaporation of the boiler; that is, the evaporation per square foot of heating surface. So, making certain rejections from the table, I would reject the last five of the tests at the right hand of the diagram on account of abnormal conditions. If those five tests had been rejected, Mr. Christie would not have drawn his curve going up so high toward the right. A still further criticism: Supposing that all the figures were correct, and supposing that every test that he plotted was plotted correctly; the next question is, how to run the curve through the diagram. Well, the curve should be an average curve. It should either have an equal number of points above and below it, or it should have an equal total sum of distances above and below, or the areas above and below should be equal. By neither one of these criterions is the curve given in the paper justified. It runs down below the average—very far below—and his minimum, the 13 pounds, is only got by a distortion of the curve below the point where it should be. So his arithmetical computations are wrong, his method of drawing the curve is wrong, and it is wrong to put tests in that should not have been put in. So much for the destructive criticism of the paper.

Now taking Mr. Christie's data and trying what we can learn from the data by another system of study. I have spent some little time trying to do this. I avoided the arithmetical error by simply plotting, not the pounds of combustible per horse-power per hour, but by plotting the other variable which should correspond exactly with it, viz., the water evaporated per pound of combustible from and at 212 degrees; using as abscissas the rate of combustion as Mr. Christie does, and using for the ordinates the water evaporated per pound of combustible from and at 212 degrees, separating into two parts the anthracite and the bituminous coals. Then instead of trying to judge where I should draw the curve, I formed this judgment on it: That if there is a law it will be found by dividing this whole range into certain portions, taking the averages of each of these portions and then making a curve or plotted diagram through these averages. I think this is a perfectly legitimate way of trying to draw conclusions from such data. The final result I obtained from this study is shown in the accompanying table.

RELATION OF RATE OF COMBUSTION TO ECONOMY.

Group.	Rate of Combustion. Coal burned per hour per sq. ft. of grate.		Rate of Evaporization. Lbs. from and at 212 degrees per lb. combustible.					
			Anthracite.		Bituminous and Semi-Bit.		All Coals.	
	Range.	Lbs. Average.	No. of Tests.	Lbs.	No. of Tests.	Lbs.	No. of Tests.	Lbs.
1	4.71 to 7.3	6.52	4	11.32	5	11.83	9	11.61
2	8.51 to 11.66	10.22	9	10.30	7	10.76	16	10.50
3	12.08 to 13.87	13.06 [1]	3	11.26	8	11.17	11	11.20
4	14.26 to 17.70	19.75 [2]	9	11.23	7	11.03	16	11.13
5	18.07 to 21.50	20.13 [3]	8	11.23	9	11.25	17	11.24
6	22.30 to 29.47	25.37 [4]	5	11.05	8	11.10	13	11.08
7	30.20 to 35.40	32.60.[5]	4	11.31	5	11.22	9	11.26
8	40.00 to 45.40	41.48 [6]	1	11.69	3	10.70	4	10.95

[1] Rejecting No. 39, 12.82 lbs.; No. 32, 13.22 lbs.; both anthracite.

[2] Rejecting No. 2, 12.47 lbs.; No. 12, 12.88 lbs.; No. 11, 13.40 lbs.; all anthracite.

[3] Rejecting No. 8, 12.76 lbs., anthracite.

[4] Rejecting No. 103, 13.96 lbs., bituminous.

[5] Rejecting No. 74, 7.82 lbs., bituminous; No. 92, 12.20 lbs., anthracite; No. 64, 6.29 lbs., anthracite.

[6] Rejecting No. 63, 6.38 lbs.; No. 65, 7.76 lbs.; No. 66, 7.44 lbs.; bituminous.

This means that the economy, as far as it is shown by these 108 boiler tests, rejecting thirteen of them, is entirely independent of the rate of combustion per square foot of grate surface, and the curve, expressing the relation of the rate of combustion to economy, should be a horizontal straight line. That generalization is nothing new to me. I published a few months ago (*Engineering News*, September 24, 1896) a study of Prof. W. F. M. Goss's work at Purdue University on locomotives, and showed that if we could eliminate the loss due to throwing coal out of the stack, and if we could proportion the grate surface to the heating surface so as to burn the same amount of coal per hour in each case, the efficiency is entirely independent of the rate of combustion within the limits of 60 pounds per square foot of grate per hour and 240. Here in Mr. Christie's paper are ranges from 5 pounds to 45 pounds, and from it we find that the economy of the boiler is independent of the rate of combustion within this limit.

There is a belief among many engineers in the West that with bituminous coal the way to get economy out of a boiler is to cut down the grate surface as far as possible and burn the coal at the most intense rate possible, so that the same amount of coal per hour is burned as would have been burned on the larger grate at the lower rate; the theoretical reason being that combustion is thus obtained with a smaller excess of air and therefore less heat is taken out at the chimney. So much for the grate surface part of the paper.

As the author has referred to my table on chimneys (*Transactions*, vol. iv., p. 81), I will have to say something about that. It is perhaps unfortunate that in my publication of a chimney table some twelve years ago I did not make it clear just how I derived the coefficient in the formula. In the paper I said it had been found that a chimney 80 feet in height and 42 inches diameter, was sufficient to cause a rate of combustion of 120 pounds of coal per hour per square foot of area of chimney, and that brief statement was practically all that was said about the basis of the derivation of the coefficient. The formula has recently been criticised in *Power* as derived from only a single case. Well, in the statement I made in the *Transactions* it may look so, and it should have been explained in greater detail in the original paper. I will now try to put myself straight on the record by saying that the formula and the coefficient were arrived at after a long study, by plotting a great number of formulæ, and putting in the plotting all the practical data I could get about chimneys, whether they came from the formulæ or not, and especially plotting the practice of the Babcock & Wilcox Company, developed through many years of practice.

After all this plotting, the reason I selected this particular basis for the derivation of the coefficient—viz., that an 80-foot by 42-inch chimney would burn 120 pounds of coal per square foot area of chimney per hour—was that there seemed to be a general correspondence of all the data at that size of chimney and at no other. If I had attempted to base the coefficient on data obtained from formulæ or from practice with chimneys of either smaller or larger size, the results obtained from such data would have been too discordant. But around that size I found nearly all the data agreed, and from that fact I derived the statement that a chimney 80 feet by 42 inches is good for 231 horse-power, and thereupon proceeded to obtain the coefficient of the formula. So my formula is based on a very much larger set of observations and data and study than would appear from the paper itself.

Now, Mr. Christie in discussing the subject of chimneys does not state his whole reasoning, so I do not know how he derived his table, except it is from this small table of data which he gives. If it is derived from that table, then the data are too few to derive any conclusions from. But he apparently assumes that the chimney horse-power should be a coefficient into the area into the square root of the height. That is a perfectly true formula provided you assume that the coefficient is not a constant but a variable. That formula for chimneys—a coefficient into the area into the square root of the height—would mean that the horse-power of a chimney is directly proportioned to the area. By analogy we know that that is true for no kind of fluid or liquid whatever. For water, and air, and steam, the flow is approximately equal to the square root of the fifth power of the diameter and not to the area, and the particular form in which I have got my formula, in which the coefficient is variable, depending on the diameter, was obtained by an arbitrary assumption of a condition which would make the formula fit the average curve obtained from the data. Certainly the plain parabolic formula is wrong for a chimney formula; that is, a constant into the area into the square root of the height. It should be a variable. All the ancient formulæ for the flow of water have that peculiarity of a constant coefficient, but Kutter and Darcy and all the other recent writers who have made experiments have found that that coefficient is a variable. The author calculates the horse-power here of a certain chimney, the capacity being 1,638 pounds of coal per hour, and he calls its horse-power as 410—that is just four pounds of coal to a horse-power—and he says that my table gives 348 horse-power. My table does say 348 horse-power, but on the top of the table it says a horse-power is here taken as five pounds of coal per horse-power. Multiply 348 by five pounds, and it gives 1,740 pounds, which I say the chimney will carry, and Mr. Christie says 1,638—not so far apart from my figure. So when one is writing of the horse-power of chimneys, or taking the horse-power from a table, it is always well to state just what is meant by horse-power.

Mr. Wm. Barnet Le Van.—I would state that in my experience of about 400 boiler tests, that we have not advanced in results beyond what was accomplished twenty years ago. Going back to the trials of boilers at the Centennial Exposition in 1876, we will find that the average coal consumption per square foot of grate on the capacity tests was fifteen (15) pounds, and on the economy tests was eleven (11) pounds.

Quite a number of papers have been read before this Society on chimney draft and their horse-power. Mr. Wm. Kent's tables on chimney dimensions are no doubt the best, but they are short of the capacity which a chimney will develop. A chimney which, according to his formula, should only be sufficient for four hundred (400) horse-power, will, as I have demonstrated, suffice for a thousand (1,000) horse-power boiler, and it is proposed to add five hundred horse-power additional. The fact is we are as much in the dark in regard to chimneys as we are in regard to the physical constitution of heat, light, and electricity. To illustrate : I made a test of a boiler some time ago, and the evaporation per pound of combustible was eleven (11) pounds of water per pound of combustible. On the following day the test was repeated; it was raining hard, and the evaporation was twelve (12) pounds of water per pound of combustible, using the same coal and fired by the same man—in fact, everything was the same. I am less satisfied with what I know about chimneys. Atmospheric influences make a difference of five (5) to eight (8) per cent.

Prof. R. H. Thurston.—Mr. Christie has, I think, gathered together a large amount of valuable data, and their analysis will perhaps be found a task worthy of the time and thought, not only of the writer of the paper, but of every engineer engaged in this department of engineering practice. The plotted data show, as it seems to me, a very evident and, on the whole, constant increase in the cost of the horse-power with increasing intensities of draft and rates of combustion. It does not appear to me that we can assign a minimum at 13 pounds, or at any other figure, although the falling off of efficiency is certainly not as marked at the lowest as at the highest rates of combustion. Scanning the plate, a minimum seems to exist at about 16 or 18 pounds—that is to say, at figures above which firemen are not accustomed to handle fires, and then a maximum at about 12, and then the costs of the horse-power fall off to 7 or 8 pounds, the lower limit of usual practice; and they finally rise again slightly at the lowest figures plotted.

I think, however, that to make the work thoroughly complete, the two classes of coal should be discussed separately, and thus the complication which now arises from the interpolation of the data for one fuel, which naturally burns at considerably higher rates than the other, into the table exhibiting the latter, would be avoided.

Still more complete results would be obtainable from the study of these data were the boiler trials here recorded distinguishable into two classes. It is customary to report, in the trial of steam boilers, under the guarantee clauses of contracts, first, upon the economy; secondly, upon the capacity. In the first case, the trial is made at a moderate rate of combustion; in the second, at a rate which is expected to develop the maximum power of the boiler, irrespective of the economy attained. The first is expected to represent the conditions of normal and efficient operation of the boiler; the second, to show what can be done if it is required to drive it in an emergency, and when cost of fuel is a secondary matter.

I have gone over the figures in a first and rough approximation to such a classification, and I get the following results, assuming that economy trials may be taken as those made with a lower rate of combustion than 20 pounds for anthracite, and than 30 pounds for bituminous coals. The following are the figures:

For anthracite trials, the average rate of combustion in economy trials is 12.62. The presumption is, I presume, a fair one, that this average represents what the skilled fireman and the expert manager of such trials has found to be the best rate for the production of high efficiency combined with that minimum of power developed which best suits the market. To this extent Mr. Christie's deduction is, as it seems to me, confirmed. The average of the capacity trials is 26 pounds of fuel per square foot of grate. The very best work usually is done by Pocahontas and Cumberland coals, but these are exceptional results which can hardly be taken as giving correct points on the mean line of the diagram. That line should rise considerably above the minimum thus indicated. The bituminous coals, taken by themselves, give, for the average of the economy trials, 13.23 pounds, and for the capacity trials, 35.44 pounds of fuel per square foot of grate per hour.

I think it has been the opinion among experts generally that it is possible to burn fuel too slowly for economy; but these figures do not indicate such to be the fact, though there is certainly no noticeable gain in reducing the rate of combustion below about 8 pounds. It is usually, I think, assumed that the rate of combustion of bituminous coals should be higher than that of the anthracites. This comparison does not seem to confirm that conclusion. The difference in the economy trials, assuming the classification to be right, is precisely 5 per cent. as between the two classes, while the capacity trials give a ratio of 1⅓ to 1 on the side of the bituminous fuels. The maximum rates of combustion, usually about 30 for the anthracites and 40 for the bituminous coals, and in the highest single cases, 45.4 (No. 93) and 57.2 (No. 66), are, respectively, one-third higher and nearly one-half higher for the bituminous coals than for the anthracites.

The cases of exceptionally good performance seem to be as often with the one as with the other class of coals, although, of course, there are no anthracites in the extreme upper part of the diagram.

The most extensive collection of data for anthracite coals of which I have knowledge is that of Isherwood, as obtained from his experiments with marine boilers, both of the water-tube and of the fire-tube types. The tables will be found at pp. 702-5, in the appendix to the last edition (1896), of my *Manual of Steam-Boilers*. These figures have been plotted by Professor Carpenter, and the curve thus obtained is seen on the accompanying diagram * (Fig. 130). It will be seen that the efficiency varies in the inverse sense with the intensity of combustion throughout the whole range—as it should, of course, other things equal, because of the increasing ratio of area of heating surface to the weight of fuel burned, in the unit of time, with decreasing rates of combustion.

It is evident, also, that the curve should become asymptotic, in the ideal case, to both co-ordinate axes. It is not unlikely, as I have elsewhere indicated, a logarithmic curve.† This was shown by Havrez many years ago. The lines on the diagram evidently fall too low at the left, and show too low evaporations for the higher rates of combustion. The equations of the curves, as constructed, are given by the observer drawing these lines as, for the water-tube boiler and for the fire-tube boiler respectively:

$$y = 14.3 - 4.5\sqrt{x};$$
$$y = 3 - 5\sqrt{x}.$$

---

* *Power*, 1895.

† *Manual*, pp. 221, 227, § 98.

The general result indicates a superiority of about 10 per cent. on the side of the water-tube boiler.*

A possibly important source of irregularity and uncertainty in the table presented in this paper may be found in the fact that the proportion of heating to grate surface is unknown and probably somewhat variable. This may, perhaps, account for the departure of some of the observations from the line of means, so greatly. The true comparison lies, of course, between the area of heating surface and weight of fuel burned per unit of that area. Were the data given as pounds of fuel burned per square foot of *heating* surface, these irregularities would, to some extent at least, disappear. In this respect the Isherwood data have an advantage, being comparatively uniform in proportion of heating to grate surface.

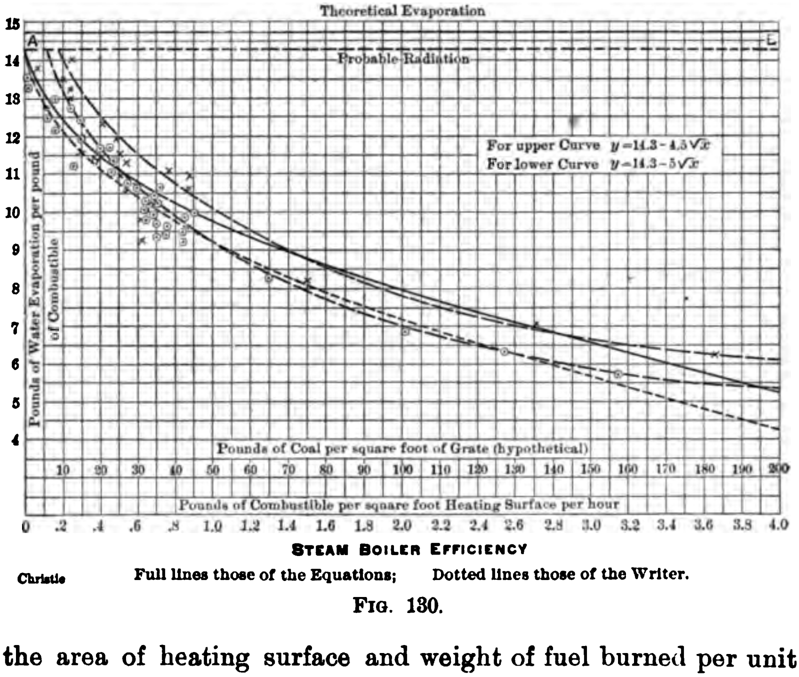

STEAM BOILER EFFICIENCY

Christie — Full lines those of the Equations; Dotted lines those of the Writer.

FIG. 130.

For general purposes, I imagine the expression proposed by Rankine will prove satisfactory, as will that of Havrez. The former may be taken as, for average cases, in good practice,

$$\text{Efficiency} = W \frac{S}{(S + 0.5\,F)};$$

---

* Isherwood's *Researches;* Thurston's *Manual*, p. 318.

tion below about 8 pounds. It is usually, I think, assumed that the rate of combustion of bituminous coals should be higher than that of the anthracites. This comparison does not seem to confirm that conclusion. The difference in the economy trials, assuming the classification to be right, is precisely 5 per cent. as between the two classes, while the capacity trials give a ratio of 1⅓ to 1 on the side of the bituminous fuels. The maximum rates of combustion, usually about 30 for the anthracites and 40 for the bituminous coals, and in the highest single cases, 45.4 (No. 93) and 57.2 (No. 66), are, respectively, one-third higher and nearly one-half higher for the bituminous coals than for the anthracites.

The cases of exceptionally good performance seem to be as often with the one as with the other class of coals, although, of course, there are no anthracites in the extreme upper part of the diagram.

The most extensive collection of data for anthracite coals of which I have knowledge is that of Isherwood, as obtained from his experiments with marine boilers, both of the water-tube and of the fire-tube types. The tables will be found at pp. 702-5, in the appendix to the last edition (1896), of my *Manual of Steam-Boilers*. These figures have been plotted by Professor Carpenter, and the curve thus obtained is seen on the accompanying diagram * (Fig. 130). It will be seen that the efficiency varies in the inverse sense with the intensity of combustion throughout the whole range—as it should, of course, other things equal, because of the increasing ratio of area of heating surface to the weight of fuel burned, in the unit of time, with decreasing rates of combustion.

It is evident, also, that the curve should become asymptotic, in the ideal case, to both co-ordinate axes. It is not unlikely, as I have elsewhere indicated, a logarithmic curve.† This was shown by Havrez many years ago. The lines on the diagram evidently fall too low at the left, and show too low evaporations for the higher rates of combustion. The equations of the curves, as constructed, are given by the observer drawing these lines as, for the water-tube boiler and for the fire-tube boiler respectively:

$$y = 14.3 - 4.5\sqrt{x};$$
$$y = 3 - 5\sqrt{x}.$$

---

* *Power*, 1895.

† *Manual*, pp. 221, 227, § 98.

The general result indicates a superiority of about 10 per cent. on the side of the water-tube boiler.*

A possibly important source of irregularity and uncertainty in the table presented in this paper may be found in the fact that the proportion of heating to grate surface is unknown and probably somewhat variable. This may, perhaps, account for the departure of some of the observations from the line of means, so greatly. The true comparison lies, of course, between the area of heating surface and weight of fuel burned per unit of that area. Were the data given as pounds of fuel burned per square foot of *heating* surface, these irregularities would, to some extent at least, disappear. In this respect the Isherwood data have an advantage, being comparatively uniform in proportion of heating to grate surface.

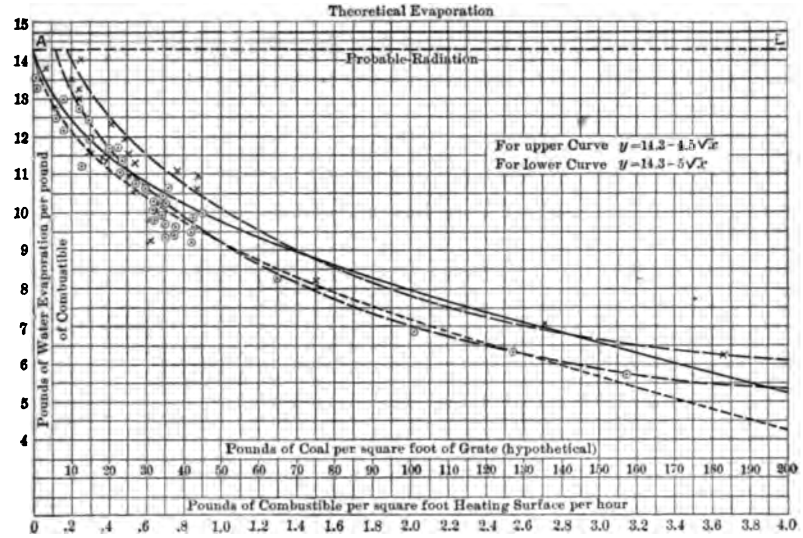

Steam Boiler Efficiency

Christie Full lines those of the Equations; Dotted lines those of the Writer.

Fig. 130.

For general purposes, I imagine the expression proposed by Rankine will prove satisfactory, as will that of Havrez. The former may be taken as, for average cases, in good practice,

$$\text{Efficiency} = W\frac{S}{(S + 0.5\,F)};$$

---

* Isherwood's *Researches;* Thurston's *Manual*, p. 313.

where S and F are the proportions of heating surface and of fuel burned per square foot of grate.*

Mr. Wallace Christie.†—The writer has gone over very carefully all the reports of the tests tabulated, and has found a very few clerical errors; and they have been corrected.

Test No. 14 is thoroughly bad, and as it cannot be traced so as to correct it, will have to remain uncorrected.

There are a few tests in which the water evaporated per pound of combustible is placed in the same column of equivalent water evaporated per pound of combustible, as the latter figure was not given in the reports of these tests. None of the corrections made nor the above noted fact have any effect on the diagram.

There is no one who appreciates more than the writer does, the value of studying the anthracite and bituminous coals separately, but he was not able to get that classification ready in time for the meeting. Fig. 131 and Fig. 132 give the tabulation with only the anthracite combustible and the bituminous combustible in each diagram clearly indicated.

In the tests the bituminous diagram shows a very decided loss in efficiency as the pounds of coal burned per square foot of grate increases, while in the anthracite diagram the efficiency seems to be less decided, which in a general way coincides with the conclusions of Mr. Curtis.

Dr. Thurston's conclusions from the data given, that 12.62 pounds of coal per square foot of grate for anthracite coal, and 13.23 for bituminous coal, which are the average of the rates of combustion in efficiency tests, come very close to 13 pounds, a rate which it seems to the writer as the most economical rate of combustion in general for rate of all coals. The mean of figures quoted by Mr. Levan is also 13 pounds, which also corroborates the writer's statement.

As to the writer's method of drawing the mean line, he would say that what he called the mean line in the paper should possibly have been called the line of most points, as it was passed through or near more of the points in the diagram than any other line would pass through; being through or near about one-third of the tests.

The writer is not ignorant of methods of drawing mean lines (as was implied by Mr. Kent). He has gone over the combusti-

---

* Thurston's *Manual*, § 98.

† Author's Closure, under the Rules.

ble diagram with the aid of a planimeter, averaging the area within the lines in each inch as figured, as from 9 to 10 pounds of coal burned and from 10 to 11, etc., and he has found that the general trend of a mean line obtained in that manner is the same as he gave in the original diagram, though not quite so decided in its curvature. The objection to using a line obtained in this way is that one space which might contain eight or nine tests would have the same value in determining the curve as another space with only one test in the same space, and the writer felt himself warranted in rejecting it as giving a very unsatisfactory line. He has prepared Fig. 133 by drawing ordinates, equally distant from each other to a base line, which base is the line of the rate of combustion; and upon all the ordinates, beginning on the left of the original diagram, the combustible burned as located in consecutive tests on consecutive lines in this manner by giving each test an equal value in determining the curve. The mean line of curve, as drawn, can be readily seen to be a properly drawn curve, and it also has the same number of points above the line as it has below the line, not counting the rejected points, which seem to be, according to Mr. Kent, unworthy of our consideration.

The writer has not tried to force any laws which govern boiler economy on any one, but his endeavor was to present the results of tests as given to the public, to the Society for their consideration, and if the paper shall have been successful in securing more accurate and carefully conducted tests in the future, it will please no one more than himself.

The tests given in Mr. Barrus's book were not used because they did not give the pounds of combustible burned.

One conclusion which the writer wished to present as *worthy of note* was that 4 pounds of coal burned per hour under a good boiler was seldom exceeded in producing a horse-power (A. S. M. E. standard), the average of the reported tests being 3.64 pounds. This conclusion has not been disputed.

Mr. Kent, in his discussion, insists on tests being used which are both good and bad as far as economy is concerned, but later, when drawing his conclusions, he rejects certain tests which may seem abnormal in results from those plotted near them, to come to a proper conclusion.

For those who have an Index Rerum or other method of classifying references to literature, the title used, though possibly not absolutely technical, seems preferable to the extended technical title suggested. The writer has reason to believe that a

This "if" is in the way when it comes to commercial boiler experience. The writer of this paper, taking the matter of rate of combustion and the actual working of boilers into considerable diagram with the aid of a planimeter, averaging the area [redacted]

them, to come to a proper conclusion.

For those who have an Index Rerum or other method of classifying references to literature, the title used, though possibly not absolutely technical, seems preferable to the extended technical title suggested. The writer has reason to believe that a boiler test cannot be conducted too carefully, and also that the best tests give opportunity for the most scientific conclusions.

The tests reported were not collected with the idea of securing only the best, but all the tests that could be secured which seemed to be reasonably authentic were used. Test No. 103 (not plotted in the diagram), giving such a high evaporation—giving 13.96 pounds of water—was made with a "Cahall vertical" boiler fitted with a Hawley down-draft, and is correct as far as the writer knows; and the conditions were very favorable for the result obtained.

Mr. Kent refers in his handbook to the fact that, with a well-constructed furnace and complete smoke consumption, 12½ pounds of water evaporated may be exceeded; while he calls anything over 12.5 in the writer's paper simply incredible. In a recent issue of the *Engineering Record*, 12.75 is given as "a result obtained under conditions of established practice; it is not beyond the range of reasonable expectations to look for 13 pounds, or perhaps a trifle higher, as the possible evaporation when every circumstance favors economy," as 2 per cent. efficiency gained from coal is equivalent to one-third of a pound of water evaporated.

In the writer's own record of tests the location of boilers, type, and heating surface is given, but for the present purpose it did not seem necessary to include it in the report. He also thinks that the slight errors which may be in the reports of tests are probably equalized by errors of a personal equation which are more or less frequent in boiler tests.

The writer has gone over Mr. Kent's criticism of Professor Goss's work at Purdue University on a locomotive boiler, and understands his method of reasoning and accounting for the losses. The tests criticised were on a locomotive boiler and are not numerous enough for the sweeping assertion made. In fact, in his opinion, the criticism resolved itself into this—that if we could eliminate the spark losses the efficiency of a boiler would remain constant, with the same quantity of coal, burned in the same time on different areas of grates under the same boiler. This "if" is in the way when it comes to commercial boiler experience. The writer of this paper, taking the matter of rate of combustion and the actual working of boilers into consideration, does not have the "if" to contend with and does not wish his work to depend on factors which have no *commercial* value.

With the same grate area and boiler, the writer believes that there is a rate of combustion which gives the greatest economy of evaporation for each boiler, and his conclusion, from the tabulated tests, is that the rate, considering all boilers, is between 12 and 14 pounds, or, as he has seen fit to call it, 13 pounds, of coal burned per square foot of grate per hour.

Commercial efficiency may favor the burning of all the coal possible on a grade, which the writer does not deny; but theoretical efficiency, he thinks, is not at any rate of combustion, but at some one particular rate.

C. Wye Williams, in his *Combustion of Coal*, page 181, says something like this: "A few words . . . on quick and slow combustion . . . time is the true test of efficiency. Rapid combustion is more economical of time and slow combustion of fuel."

Prof. A. B. W. Kennedy, F. R. S., a recognized expert in England, gives the following results of tests made with a Thorneycroft water-tube boiler: At 7.74 pounds of coal burned per square foot of grate per hour the equivalent evaporation was 13.4 pounds; at 66.6 pounds of coal the equivalent evaporation was 10.29 pounds. Certainly this shows a decrease in economy with increase of rate of combustion, and being made by the above authority, the writer feels bound to accept it in preference to any theoretical conclusion.

Rankine, in *Steam Engine*, page 293-94, says: "As the ratio of square feet of heating surface to coal burned per square foot of grate per hour increases—that the rate of combustion decreases—by calculation—the ratio of evaporation to evaporative power of coal increases." Consequently the efficiency of evaporation decreases as the rate of combustion increases.

The average of all the tests gives the developed horse-power only about 9 per cent. above the rated horse-power of the boilers.

Chimneys.

Having found that a relation existed between the coal burned per square foot of grate, with efficient chimney draft, for anthracite and bituminous coal, as shown by the results tabulated in the paper, page 367, this relation gave 1.83 to 1 as the ratio of area of grates for the best results from anthracite and bituminous coal, respectively, under the same chimney.

The coefficient $\frac{X}{A}$ was found in all cases—a large number not tabulated—to be equal to the coal burned per hour square foot of grate; hence in the equation, next to last line on page 367, "coefficient" cancels the "coal per square foot of grate per hour" and we have equation (1).

Equation (2) comes by using 1.83, the ratio named above, as a divisor—for bituminous coal grates.

Then equation (3) comes from multiplying G by 13, the economic rate of combustion.

Putting $G = A\sqrt{H}$ in equation (3), we have "pounds of coal per hour" $= 13 \times G \times A\sqrt{H}$.

Of course there are limits to the use of all the equations. As a boiler horse-power (A. S. M. E. standard assumed) is developed by 4 pounds of coal or less burned per hour, dividing the above equation by 4 gives equation (4) of the paper.

In regard to the form of chimney formula, both Mr. Kent's and the writer's are in the form of the envelope of a parabola, and have three variables, $H.P.$, A, and H.

Plotting points for a line of coal capacities with $A\sqrt{H}$ as ordinates and pounds of coal burned per hour as abscissas, both the writer's formula and Mr. Kent's, using "effective area" for A in the latter case, give straight lines, and Mr. Kent's formula, using "actual area" for A, gives an irregular curved line in between the two.

Some chimneys used in connection with forced draft plot at or near Mr. Kent's line, while chimneys using natural draft come within the line of the writer's.

Mr. Kent's formulas give higher coal capacities for the larger chimneys than the writer's.

The writer's formula covers actual practice, for coal capacity, and, while it may be in an "ancient" form, is borne out by facts; and while he has all respect for theory, yet engineers have tried to arrive at a purely scientific equation which will give the horse-power of chimneys, or coal capacity—which latter expression he prefers. But some of their equations are clumsy and commercially unserviceable, and not being able to *wait* for the development of some pure equation, the writer investigated for himself, and has come to the conclusions of the paper, governed, of course, in part, by the prior work of others.

The following tables, figured by formulæ given in the paper, will give satisfactory results to any who may use them, should any special allowances be needed. The user must use his own judgment in regard to them.

The writer is of the same opinion as Mr. W. B. Le Van, that a chimney may be used somewhat above its rated capacity, and hopes that his work may prove of value to others, until some one else brings forth facts and figures enough to contradict the results.

Table I. Grate area for a rate of combustion of 13 pounds per square foot of grate per hour.

Table II. Grate area for a rate of combustion of 23.8 pounds per square foot of grate per hour.

Table III. Coal capacity of chimney.

Table IV. Horse-power of boilers.

Table V. Horse-power of chimneys, when two pounds of coal per hour burned furnishes 1 independent horse-power at engine. Should the engine horse-power be known, and the chimney size wanted, great care should be exercised in determining it. The last table is only intended for the one case.

The writer would like to put himself on record as being decidedly in favor of rating chimneys at their coal capacity and not by horse-power.

TABLE I.—GRATE AREA.

DIAM. INCHES.	AREA (A) SQ. FT.	HEIGHT OF CHIMNEY.														EQUIV. SQ. CHIM. SIDE OF SQ.
		50	60′	70′	80′	90′	100′	110′	125′	150′	175′	200′	225′	250′	300′	
		GRATE AREA (G) = $A\sqrt{H}$.—For a rate of combustion of 13 lbs. per sq. ft. of grate per hour.														
18	1.77	13	14	15	16	...	...	...	...	...	...	...	...	...	...	16′
21	2.41	17	19	20	21	...	...	...	...	...	...	...	...	...	...	19
24	3.14	22	24	26	28	30	...	...	...	...	...	...	...	...	...	22
27	3.98	28	31	33	35	38	...	...	...	...	...	...	...	...	...	24
30	4.91	35	38	41	44	47	49	...	...	...	...	...	...	...	...	27
33	5.94	...	46	50	53	56	59	62	...	...	...	...	...	...	...	30
36	7.07	...	55	59	63	67	70	74	79	...	...	...	...	...	...	32
39	8.30	...	...	69	74	79	83	87	93	...	...	...	...	...	...	35
42	9.62	...	...	81	86	91	96	102	108	120	...	...	...	...	...	38
48	12.57	...	...	...	112	119	126	132	141	157	...	...	...	...	...	43
54	15.90	...	...	...	...	151	159	167	178	199	210	...	...	...	...	48
60	19.64	...	...	...	...	186	196	206	220	246	260	...	...	...	...	54
66	23.76	...	...	...	...	...	238	249	266	297	314	336	...	...	...	59
72	28.27	...	...	...	...	...	283	296	317	353	374	400	424	...	...	64
78	33.18	...	...	...	...	...	...	348	371	415	449	469	498	525	...	70
84	38.48	...	...	...	...	...	...	403	431	481	509	544	577	608	666	75
90	44.18	...	...	...	...	...	...	...	495	552	584	625	663	698	765	80
96	50.27	...	...	...	...	...	...	...	563	628	665	711	754	795	871	86
102	56.75	...	...	...	...	...	...	...	636	709	749	802	851	897	983	91
108	63.62	...	...	...	...	...	...	...	712	795	841	900	954	1,066	1,101	96
114	70.88	...	...	...	...	...	...	...	...	886	937	1,002	1,063	1,121	1,228	101
120	78.54	...	...	...	...	...	...	...	...	982	1,038	1,111	1,178	1,242	1,360	107
132	95.03	...	...	...	...	...	...	...	...	1,188	1,256	1,344	1,425	1,502	1,646	117
144	113.10	...	...	...	...	...	...	...	...	1,414	1,495	1,500	1,697	1,788	1,959	128

TABLE II.—GRATE AREA.

DIAM. INCHES.	AREA (A) SQ. FT.	HEIGHT OF CHIMNEY.														EQUIV. SQ. CHIM. SIDE OF SQ.
		50′	60′	70′	80′	90′	100′	110′	125′	150′	175′	200′	225′	250′	300′	
		GRATE AREA $(G) = A\sqrt{H} \div 1.83$.—For a rate of combustion of 23.8 lbs. per sq. ft. of grate per hour.														
18	1.77	7	7.6	8.1	8.7	.....	.....	.....	.....	.....	.....	.....	.....	.....	.....	16″
21	2.41	9	10	11	12	.....	.....	.....	.....	.....	.....	.....	.....	.....	.....	19
24	3.14	12	13	14	15	16	.....	.....	.....	.....	.....	.....	.....	.....	.....	22
27	3.98	15	17	18	19	21	.....	.....	.....	.....	.....	.....	.....	.....	.....	24
30	4.91	19	21	23	24	26	27	.....	.....	.....	.....	.....	.....	.....	.....	27
33	5.94	...	25	27	29	30	32	34	.....	.....	.....	.....	.....	.....	.....	30
36	7.07	...	30	32	34	36	38	40	43	.....	.....	.....	.....	.....	.....	32
39	8.30	...	.....	38	40	34	45	47	51	.....	.....	.....	.....	.....	.....	35
42	9.62	...	.....	44	47	50	53	56	59	66	.....	.....	.....	.....	.....	38
48	12.57	...	.....	.....	60	65	69	72	77	86	.....	.....	.....	.....	.....	43
54	15.90	...	.....	.....	.....	83	87	91	97	109	115	.....	.....	.....	.....	48
60	19.64	...	.....	.....	.....	102	107	113	120	134	142	.....	.....	.....	.....	54
66	23.76	...	.....	.....	.....	.....	130	136	145	162	172	184	.....	.....	.....	59
72	28.27	...	.....	.....	.....	.....	155	162	173	193	204	219	232	.....	.....	64
78	33.18	...	.....	.....	.....	.....	.....	190	203	227	245	256	272	297	.....	70
84	38.48	...	.....	.....	.....	.....	.....	220	236	263	278	297	315	332	364	75
90	44.18	...	.....	.....	.....	.....	.....	.....	270	302	319	341	362	381	472	80
96	50.27	...	.....	.....	.....	.....	.....	.....	308	343	363	389	412	434	476	86
102	56.75	...	.....	.....	.....	.....	.....	.....	347	388	410	439	465	490	537	91
108	63.62	...	.....	.....	.....	.....	.....	.....	389	434	496	492	521	550	602	96
114	70.88	...	.....	.....	.....	.....	.....	.....	.....	484	512	548	581	612	671	101
120	78.54	...	.....	.....	.....	.....	.....	.....	.....	536	567	607	647	679	743	107
132	95.03	...	.....	.....	.....	.....	.....	.....	.....	650	686	735	778	831	899	117
144	113.10	...	.....	.....	.....	.....	.....	.....	.....	772	817	874	927	977	1,070	128

TABLE III.—COAL CAPACITY.

DIAM. INCHES.	AREA (A) SQ. FT.	HEIGHT OF CHIMNEY.														EQUIV. SQ. CHIM. SIDE OF SQ.
		50′	60′	70′	80′	90′	100′	110′	125′	150′	175′	200′	225′	250′	300′	
		Pounds of Coal Burned per Hour=13 × G.														
18	1.77	169	182	195	208	.....	.....	.....	.....	......	......	......	......	......	......	16″
21	2.41	221	247	260	273	.....	.....	.....	.....	......	......	......	......	......	......	19
24	3.14	286	312	338	364	390	.....	.....	.....	......	......	......	......	......	......	22
27	3.98	364	403	429	455	494	.....	.....	.....	......	......	......	......	......	......	24
30	4.91	455	494	533	572	611	637	.....	.....	......	......	......	......	......	......	27
33	5.94	...	598	650	689	728	767	896	.....	......	......	......	......	......	......	30
36	7.07	...	715	767	819	871	910	962	1,027	......	......	......	......	......	......	32
39	8.30	...	......	897	962	1,027	1,079	1,131	1,209	......	......	......	......	......	......	35
42	9.62	...	......	1,053	1,128	1,183	1,248	1,326	1,404	1,560	......	......	......	......	......	38
48	12.57	...	......	.....	1,456	1,547	1,638	1,716	1,833	2,041	......	......	......	......	......	43
54	15.90	...	......	.....	....	1,953	2,067	2,171	2,314	2,587	2,730	......	......	......	......	48
60	19.64	...	......	.....	....	2,418	2,548	2,678	2,860	3,198	3,380	......	......	......	......	54
66	23.76	...	......	.....	....	.....	3,094	3,237	3,458	3,861	4,082	4,368	......	......	......	59
72	28.27	...	......	.....	....	.....	3,679	3,848	4,121	4,589	4,859	5,200	5,612	......	......	64
78	33.18	...	......	.....	....	.....	.....	4,524	4,823	5,395	5,837	6,097	6,474	6,825	......	70
84	38.48	...	......	.....	....	.....	.....	5,239	5,603	6,253	6,617	7,072	7,501	7,904	8,658	75
90	44.18	...	......	.....	....	.....	.....	.....	6,435	7,176	7,592	8,125	8,519	9,074	9,945	80
96	50.27	...	......	.....	....	.....	.....	.....	7,319	8,164	8,645	9,243	9,802	10,335	11,323	86
102	56.75	...	......	.....	....	.....	.....	.....	8,268	9,217	9,737	10,426	11,063	11,661	12,779	91
108	63.62	...	......	.....	....	.....	.....	.....	9,256	10,335	10,933	11,700	12,402	13,078	14,313	96
114	70.88	...	......	.....	....	.....	.....	.....	.....	11,518	12,181	13,026	13,819	14,573	15,964	101
120	78.54	...	......	.....	....	.....	.....	.....	.....	12,766	13,494	14,443	15,314	16,146	17,680	107
132	95.03	...	......	.....	....	.....	.....	.....	.....	15,444	16,328	17,472	18,525	19,526	21,398	117
144	113.10	...	......	.....	....	.....	.....	.....	.....	18,382	19,435	20,800	22,061	23,244	25,467	128

TABLE IV.—HORSE-POWER.

DIAM. INCHES.	AREA (A) SQ. FT.	HEIGHT OF CHIMNEY.														EQUIV. SQ. CHIM. SIDE OF SQ.
		50′	60′	70′	80′	90′	100′	110′	125′	150′	175′	200′	225′	250′	300′	
		HORSE-POWER = 3.25 $A\sqrt{H}$; H. P.=4 Pounds Coal per Hour.														
18	1.77	42	46	49	52	...	...	...	...	...	...	...	...	...	...	16″
21	2.41	55	62	65	68	...	...	...	...	...	...	...	...	...	...	19
24	3.14	72	78	85	91	98	...	...	...	...	...	...	...	...	...	22
27	3.98	91	101	107	114	124	...	...	...	...	...	...	...	...	...	24
30	4.91	114	124	133	143	153	159	...	...	...	...	...	...	...	...	27
33	5.94	...	149	163	172	182	192	202	...	...	...	...	...	...	...	30
36	7.07	...	179	192	205	218	228	241	257	...	...	...	...	...	...	32
39	8.30	...	...	224	241	257	270	283	302	...	...	...	...	...	...	35
42	9.62	...	...	263	282	296	312	332	351	290	...	...	...	...	...	38
48	12.57	...	...	...	364	387	410	429	458	510	...	...	...	...	...	43
54	15.90	...	...	...	...	491	517	543	579	647	683	...	...	...	...	48
60	19.64	...	...	...	...	605	637	669	715	797	845	...	...	...	...	54
66	23.76	...	...	...	...	...	774	809	865	965	1,021	1,092	...	...	...	59
72	28.27	...	...	...	...	...	920	962	1,051	1,147	1,215	1,300	1,378	...	...	64
78	33.18	...	...	...	...	...	...	1,131	1,206	1,349	1,459	1,524	1,619	1,706	...	70
84	38.48	...	...	...	...	...	...	1,310	1,401	1,563	1,654	1,768	1,875	1,976	2,165	75
90	44.18	...	...	...	...	...	...	...	1,609	1,794	1,898	2,031	2,155	2,269	2,486	80
96	50.27	...	...	...	...	...	...	...	1,830	2,041	2,161	2,311	2,451	2,584	2,831	86
102	56.75	...	...	...	...	...	...	...	2,067	2,304	2,434	2,607	2,766	2,915	3,195	91
108	63.62	...	...	...	...	...	...	...	2,314	2,584	2,734	2,925	3,101	3,269	3,578	96
114	70.88	...	...	...	...	...	...	...	...	2,879	3,045	3,257	3,455	3,643	3,991	101
120	78.54	...	...	...	...	...	...	...	...	3,191	3,374	3,611	3,829	4,037	4,420	107
132	95.03	...	...	...	...	...	...	...	...	3,861	4,082	4,368	4,631	4,882	5,350	117
144	113.10	...	...	...	...	...	...	...	...	4,596	4,859	5,200	5,515	5,811	6,367	128

TABLE V.—HORSE-POWER (SPECIAL).

DIAM. INCHES.	AREA (A) SQ. FT.	HEIGHT OF CHIMNEY.														EQUIV. SQ. CHIM. SIDE OF SQ.
		50′	60′	70′	80′	90′	100′	110′	125′	150′	175′	200′	225′	250′	300′	
		HORSE-POWER = $6.5\,A\,\sqrt{H}$ + 2 pounds coal burned per hour = 1 H.P.														
18	1.77	84	92	98	104	......	......	......	......	......	......	......	......	......	......	16″
21	2.41	110	24	130	136	......	......	......	......	......	......	......	......	......	......	91
24	3.14	144	156	170	182	196	......	......	......	......	......	......	......	......	......	22
27	3.98	182	202	214	228	248	......	......	......	......	......	......	......	......	......	24
30	4.91	228	248	266	286	306	318	......	......	......	......	......	......	......	......	27
33	5.94	...	298	326	344	364	384	404	......	......	......	......	......	......	......	30
36	7.07	...	358	384	410	436	456	482	514	......	......	......	......	......	......	32
39	8.30	...	......	448	482	514	540	566	604	......	......	......	......	......	......	35
42	9.62	...	......	526	564	592	624	662	702	780	......	......	......	......	......	38
48	12.57	...	......	......	728	774	820	858	916	1,020	......	......	......	......	......	43
54	15.90	...	......	......	......	982	1,034	1,086	1,158	1,294	1,366	......	......	......	......	48
60	19.64	...	......	......	......	1,210	1,274	1,338	1,430	1,594	1,690	......	......	......	......	54
66	23.76	...	......	......	......	......	1,548	1,618	1,730	1,930	2,042	2,184	......	......	......	59
72	28.27	...	......	......	......	......	1,840	1,924	2,102	2,294	2,430	2,600	2,756	......	......	64
78	33.18	...	......	......	......	......	......	2,262	2,412	2,698	2,918	3,048	3,238	3,412	......	70
84	38.48	...	......	......	......	......	......	2,620	2,802	3,126	3,308	3,536	3,750	3,952	4,330	75
90	44.18	...	......	......	......	......	......	......	3,218	3,588	3,796	4,062	4,310	4,538	4,972	80
96	50.27	...	......	......	......	......	......	......	3,660	4,082	4,322	4,622	4,902	5,168	5,662	86
102	56.75	...	......	......	......	......	......	......	4,134	4,608	4,868	5,214	5,532	5,830	6,390	91
108	63.62	...	......	......	......	......	......	......	4,628	5,168	5,468	5,850	6,202	6,538	7,156	96
114	70.88	...	......	......	......	......	......	......	......	5,758	6,090	6,514	6,910	7,286	7,982	101
120	78.54	...	......	......	......	......	......	......	......	6,382	6,748	7,222	7,658	8,074	8,840	107
132	95.03	...	......	......	......	......	......	......	......	7,722	8,164	8,736	9,262	9,764	10,700	117
144	113.10	...	......	......	......	......	......	......	......	9,192	9,718	10,400	11,030	11,622	12,734	128

To be used only in connection with very efficient engines.

WM. WALLACE CHRISTIE,
Paterson, N. J.

DCCXVIII.*

CONTRACTION AND DEFORMATION OF IRON CASTINGS IN COOLING, FROM THE FLUID TO THE SOLID STATE.

BY FRANCIS SCHUMANN, PHILADELPHIA, PA.
(Member of the Society.)

INTRODUCTION.

One of the most serious and annoying difficulties to the iron founder is the tendency of castings to deformation, due to unequal cooling and consequent unequal contraction; excessive initial stresses, if not cracked castings, often resulting, no matter how carefully moulded or with what care the iron is selected and manipulated.

Our knowledge as to the causes has been but vague, notwithstanding the thought and attention given the subject.

The writer, impressed with the importance of the matter, and having opportunities for observation and experiment through his connection with foundries where great diversity in the form of product resulted, decided to investigate with a view of discovering what laws of physics applied and in how far the cause and effect were determinable and controllable.

After some twelve years of observation and research the writer is enabled to submit the result of his labors, which it is hoped will prove of practical use to the engineer and foundryman.

GENERAL LAWS ADVANCED.

Cast iron, as well as all other bodies, with but few exceptions, expands or contracts equally in all directions, with the increase or decrease of its temperature, respectively. Hence the proportions of a body, whether its temperature increases or de-

---

*Presented at the New York meeting (December, 1896) of the American Society of Mechanical Engineers, and forming part of Volume XVIII. of the *Transactions*.

creases, remain alike. At moderate low temperatures, from 32 degrees to 212 degrees Fahr., the change is directly as the temperature. At high temperatures the changes are greater than the changes in heat.

Contraction takes place just when incandescence disappears, or when the color changes from red to black, and continues until the temperature is normal to that of the surrounding mediums.

CONTRACTION AND DEFORMATION OF PRISMS CAST IN SAND MOULDS.

A prism cast in a sand mould will maintain its alignment, after cooling in the mould, provided all parts around its centre of gravity of cross section cool at the same rate as to time and temperature.

Deformation is due to unequal contraction of the elements of the cross section surrounding the centre of gravity of the section.

Unequal contraction is due to unequal cooling, causing, or tending to cause, initial stresses in the elements of the prism, resulting in deformation or rupture.

The rate of contraction between the fluid (heated) state and the solid (cold) decreases with the volume or mass of the casting, and inversely as to time of cooling.

Rapid cooling tends to increase the density of the iron; the crystals are diminished in size, and the fracture denotes greater compactness, with more evenness of surface and less ruggedness. The color tends towards white, denoting a change of carbon into the combined state at the moment of solidification. The size of crystals decreases with an increase in combined carbon. Its resistance to impact is lessened, and the rate of contraction is increased.

Slow cooling develops larger crystals, less density, and increased ductility. The fracture is darker or more gray in color, the surface uneven and rugged, and the carbon is in a more free state. The contraction is lessened, and the casting has greater resistance to shock, although its resistance to a quiescent cross-breaking force may be less.

In any prism, variations in density may occur by reason of differences in the rate of cooling, the more rapidly cooling part being more dense, made so by the molecules drawn from the still fluid part of the casting, which, cooling later, will be less dense or with a diminished number of molecules. The molecules in adjusting themselves follow and flow in lines coinciding in direction with the waves of cooling, being from a high to a lower temperature, thus tending to create a void and lessening the density of those parts which cool slower.

The rate of cooling, or dissipation of heat, is uniform around the perimeter of the cross section.

The total amount of heat to be dissipated per unit of perimeter of section may or may not be uniform or equal, depending upon the character of the cross section.

The greater the amount of heat to be dissipated per unit of perimeter the slower the cooling.

A plane of neutral or mean action, relative to the total dissipation of heat, passes through the centre of gravity of the cross section. In symmetrical sections the action is alike on either side of the neutral plane, while in unsymmetrical sections it will, or may, vary.

The dissipation of heat through the perimeter of a section follows wave lines perpendicular, in direction, to the perimeter.

The amount of heat to be dissipated per unit of perimeter varies in proportion to the volume or mass of the prism of which the respective unit forms the dissipating side.

The relative amount of heat dissipated in a prism, per unit of time, varies in proportion to the dissipating surface of the perimeter divided by its respective volume of cross section.

The crystals that form in cast iron, when changing from the liquid to the solid state, have the tendency, when no disturbing causes interfere, to form themselves into regular octahedrons, or double four-sided pyramids, with their bases joined.

Their size varies, the mean increasing with the slowness of cooling. The long axis of the crystals tends to adjust itself perpendicular to the plane of cooling surface of the casting. Thus, in a cylinder the axis would coincide with the radial lines, while in a square prism, the axis of the crystals being perpendicular to the four sides, will tend to flow apart on a plane bisecting the angle of two sides; on this bisecting plane the casting will be less dense and of diminished cohesion.

A prism, unsymmetrical in section, in which the proportion of cooling surface to mass varies around the centre of gravity of the cross section, will have the greatest proportion of smaller crystals in the parts cooling the quickest. Where the change in the rate of cooling is greatest will be the place of greatest interference to the natural adjustment of the crystals, as to size and position, and hence the place of least cohesion.

Contraction is in a direct relation to the rate of cooling and size of crystals. The more rapid thé cooling the smaller the crystals and the greater the contraction.

In any prism, unsymmetrical in section, composed of a smaller mass joined to a larger, the greatest longitudinal contraction will occur in the larger mass. This apparent contradiction to the general law, that contraction decreases with the mass and rate of cooling, is explained when we consider volumnar contraction. The larger mass will have its rate of contraction equal in all directions; the smaller mass is restricted in its contraction longitudinally by the larger mass at the point of juncture of the two masses, but maintains its greater rate of contraction transversely; were the transverse rate the same as that of the larger mass, its longitudinal contraction would be the same, but its transverse rate being greater, the excess in volume flows in direction of length, resulting in a greater length, after cooling, of the smaller mass.

When the rates of contraction in the elements of the cross section of a prism are known, the resulting change in alignment and initial stresses, due to the differences in contraction, can be determined.

The line of mean contraction passes through the centre of gravity, or neutral plane, of the cross section.

In unsymmetrical sections the centre of action of the maximum and minimum contraction coincides with the centre of gravity of the area elements that are separated by the neutral plane which passes through the centre of gravity of the whole section.

Modifying causes that affect the results obtained by the application of the preceding laws are: Imperfect alloying of two or more different irons having different rates of contraction; variations in the thickness of sand forming the mould, which is the medium for conducting the heat from the surface or perimeter of the cross section; when the prism is cast in a horizontal position, and thin layers of sand at top and bottom affect the dissipation of heat, which becomes unequal by reason of the difference in circulation of air between the upper and under external surfaces of the mould, the upper surface dissipating the greater amount of heat; the position and form of cores, which tend to resist the action of contraction, also the difference in the conducting power between moist sand and dry-baked cores; differences in the degree of moisture of the sand surrounding the prism, especially when small in mass; unequal exposure by the removal of the sand while yet in the act of contracting; flanges, ribs, or gussets that project from the side of the prism, of sufficient area to cause the sand to act as a buttress, and thus prevent the natural longitudinal adjustment due to contraction; in light castings of sufficient length the unyielding sand between the flanges, etc., may cause rupture.

INFLUENCE OF THE PRINCIPAL CONSTITUENTS OF IRON UPON THE RATE OF CONTRACTION.

Carbon is the most active element, when in the combined state, to increase the rate of contraction. As strength and hardness result from slight increase in the proportion of combined carbon to that in a free state, it follows that strong irons have a greater rate of contraction than those in which a lesser amount is present. When the combined carbon exceeds certain limits, hardness and contraction increase rapidly and the strength decreases. Increase in the proportion of free carbon has the opposite tendency.

Silicon, when present, not exceeding certain limits, tends to free the carbon, reduces the rate of contraction, and increases the ductility and softness of the iron. Increasing the silicon up to, say, ten per cent., causes the iron to become brittle, hard, and weak, and increases contraction.

Sulphur tends to change the carbon into the combined state, and hence increases the rate of contraction.

Phosphorus, while tending to harden the iron, has little, if any, influence upon the proportion of combined to free carbon. It lessens the rate of contraction and diminishes the strength of the iron.

Manganese, as usually present in foundry irons, about 1 per cent., has no appreciable effect. When, however, it reaches 1.5 per cent., and the iron is low in silicon, it tends to hardness and increases contraction, although no alteration in the carbon is effected. In some hard irons the combined carbon is lessened, as also the contraction, by adding small quantities of not exceeding 0.15 per cent. of manganese to the molten iron in the ladles just before pouring in the mould. Increased strength also results.

Repeated remelting increases the rate of contraction; it tends to harden the iron and increases its density. Originally soft mixtures become stronger and harder, while hard mixtures become harder; the proportion of free carbon decreases and the combined increases; the total carbon is slightly decreased. Silicon and manganese rapidly decrease, phosphorus to a less extent, while sulphur rapidly increases, due to the fuel.

TEST-PIECE.

The cross-sectional area of test-pieces for determining the rate of contraction of a given mixture of iron should increase with the increase of combined carbon contained in the mixture, when intended for large castings.

RATE OF CONTRACTION.

To determine the rate of contraction in prisms of cast iron, when cooling in the mould to the temperature of the surrounding medium, variations from rapping the pattern, or swelling due to imperfect moulding, not considered.

When the rate of contraction of a given prism is known, that of any other prism made of the same mixture of iron, and poured at the same temperature and into the same character of mould, can be determined.

Reference.

Let C = rate of contraction (decreasing with the ratio R).

c = rate of contraction of test-piece for average gray foundry irons; $c = \frac{1}{96}$.

A = area of cross section of prism.

a = area of cross section of test-piece, usually 1 inch square.

P = perimeter of cross section of prism.

p = perimeter of cross section of test-piece.

$R = \frac{P}{A}$ = ratio of cooling surface to area of prism.

$r = \frac{p}{a}$ = ratio of cooling surface to area of test-piece.

c_1 = reciprocal of c.

$$C = \frac{1}{c_1 - \left[\frac{c_1}{\frac{r}{R} - 1} + \left(\frac{c_1}{\frac{r}{R} - 1}\,\frac{r}{R}\right)\right]}$$

$$= \frac{1}{96 - \left[\frac{96}{12 - 1} + \left(\frac{96}{12 - 1} \cdot \frac{4}{R}\right)\right]} = \frac{11}{96\left(10 + \frac{4}{R}\right)};$$

hence $C = \dfrac{1}{87.2727 + \dfrac{34.909}{R}}$ for any value of R, when $c_1 = 96$.

These formulæ are based upon actual results obtained from measurements of castings of slight sectional area gradually increasing to areas of nearly 600 square inches.

The following table, computed from the foregoing formulæ, gives the rates of contraction for different values of R:

$R =$	$C =$	$R =$	$C =$
10	$\frac{1}{90.764} = 0.011017$	0.9	$\frac{1}{126.059} = 0.007933$
9	$\frac{1}{91.151} = 0.010981$	0.8	$\frac{1}{130.909} = 0.007638$
8	$\frac{1}{91.635} = 0.010913$	0.7	$\frac{1}{137.142} = 0.007292$
7	$\frac{1}{92.259} = 0.010838$	0.6	$\frac{1}{145.452} = 0.006875$
6	$\frac{1}{93.090} = 0.010742$	0.5	$\frac{1}{157.092} = 0.006366$
5	$\frac{1}{94.254} = 0.010609$	0.4	$\frac{1}{174.544} = 0.005730$
4	$\frac{1}{96} = 0.010416$	0.3333	$\frac{1}{192} = 0.005208$
3	$\frac{1}{98.909} = 0.010110$	0.3	$\frac{1}{203.632} = 0.004910$
2	$\frac{1}{104.727} = 0.009548$	0.2	$\frac{1}{261.817} = 0.003819$
1	$\frac{1}{122.182} = 0.008184$	0.1	$\frac{1}{436.36} = 0.002292$

When the cross section of a prism is not symmetrical, the neutral plane, passing through its centre of gravity, or mass, will divide the section into two elements having different values of R.

Reference.

Let R_1 = the greater ratio $\left(\frac{P}{A}\right)$ for the respective element of the cross section, on one side of the neutral plane.

C_1 = its rate of contraction, independent of any influence from the other elements of the whole section.

R_2 = the least ratio $\left(\frac{P}{A}\right)$ of the other part of the section, on one side of the neutral plane.

C_2 = its rate of contraction, also without regard to any other part of the whole section.

C_3 = the rate of contraction of the element, for which R_1 is the greater, restricted by the longitudinal rate of contraction of the other.

Then will

$$C_1 = \frac{1}{c_1 - \left[\frac{c_1}{\frac{r}{R_1} - 1} + \left(\frac{c_1}{\frac{r}{R_1} - 1}\,\frac{r}{R_1}\right)\right]} = \frac{11}{c_1\left(10 + \frac{4}{R_1}\right)};$$

$$C_2 = \frac{1}{c_1 - \left[\frac{c_1}{\frac{r}{R_2} - 1} + \left(\frac{c_1}{\frac{r}{R_2} - 1}\,\frac{r}{R_2}\right)\right]} = \frac{11}{c_1\left(10 + \frac{4}{R_2}\right)};$$

and

$$C_3 = C_2 - \frac{(1 - C_2)^2 - (1 - C_1)^2}{(1 - C_1)^2}.$$

To determine the value of C_3 the following reasoning is pursued:

1. The prism contracts uniformly, in all directions, in accordance with the minimum rate C_2.
2. The maximum rate C_1 exerts its influence, but in a trans-

verse direction only, its longitudinal action being restricted by that of C_2.

3. The excess of volume, due to the greater transverse rate, extends longitudinally, and a consequent decreased rate of longitudinal contraction, C_3, results for those parts having the greater ratio R.

Let a = area, after contraction from C_2 of part above n—n.

a_1 = " " " " C_1 " " "

Then will $a = A\,(1 - C_2)^2$ and $a_1 = A\,(1 - C_1)^2$;

when A = area of part above neutral plane n—n (see Fig. 134) before contraction occurs.

Example (see diagram showing section of prism):

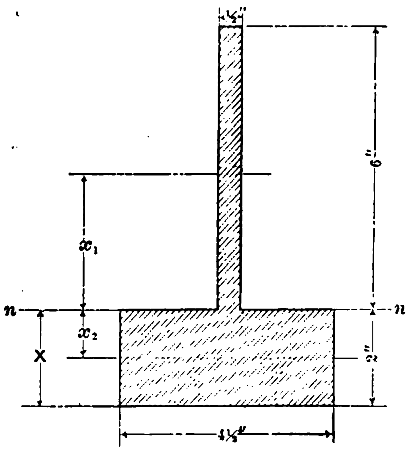

Fig. 134.

$$X = \frac{9 \times 1 + 3 \times 5}{9 + 3} = \frac{24}{12} = 2'';$$

$$x_1 = \frac{6}{2} = 3'';$$

$$x_2 = \frac{2}{2} = 1;$$

$$R_1 = \frac{p_1}{a_1} = \frac{12.5}{3} = 4.1666, \text{ for which } C_1 = 0.01048;$$

$$R_2 = \frac{p_2}{a_2} = \frac{12.5}{9}\ 1.3889, \text{ for which } C_2 = 0.00889;$$

$$\text{and } C_3 = C_2 - \frac{a - a_1}{a_1} = C_2 - \frac{(1 - C_2)^2 - (1 - C_1)^2}{(1 - C_1)^2};$$

and, substituting the values,

$$C_3 = 0.00889 - \frac{(1 - 0.00889)^2 - (1 - 0.01048)^2}{(1 - 0.01048)^2}$$
$$= 0.00889 - 0.00321 = 0.00568.$$

Hence the rate of contraction, at distance x_1 from neutral axis n—n, will be $C_3 = 0.00568$, while that at distance x_2 will be $C_2' = 0.00889$.

Résumé and application of the foregoing:

1. Find the neutral plane which passes through the centre of

gravity of the whole section which will be perpendicular to the plane of deformation, if any.

2. Find the area and perimeter of those parts of the section that lie on either side of the neutral plane.

3. Find the ratios R for the two elements.

4. Find the centre of gravity of the two elements with which the centre of action of the respective rate of contraction will coincide.

5. When the ratios R are equal no deformation occurs.

6. When the ratios R are unequal deformation will result; the maximum volumnar contraction occurring in that part of the section where R is the greatest, although its longitudinal contraction will be less. An element of a section of a prism, whose contraction would be greater than the other elements composing the cross section were it cast separately, may, when cast on, have less contraction by reason of its volumnar contraction; the transverse action taking place without hindrance, in accordance with its rate of cooling, while its longitudinal action is limited by the rate of contraction of those elements in which R is the least.

7. In symmetrical sections, the greater R the greater the contraction.

8. In prisms, longitudinal deformation will consist in the neutral plane assuming a curve, which will be part of a true circle, the side having the least ratio R being concave toward the centre of the circle.

EXAMPLES.

Prism: Equilateral triangle in section (Fig. 135).

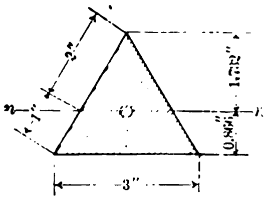

FIG. 135.

$n-n$ = neutral plane.

Total area = 3.897. Total perimeter = 9.00.

Above $n-n$ = 1.732. Above $n-n$ = 4.00.

Below $n-n$ = 2.165. Below $n-n$ = 5.00.

$$R_1 = \frac{4}{1.732} = 2.309;\ R_2 = \frac{5}{2.165} = 2.309.$$

The section is symmetrical, the rate of cooling uniform, hence also the rate of contraction, and no deformation would result, as is proven by actual experience.

The rate of contraction will be, when $c = \frac{1}{96}$ and $R = 2.309$,

$$C = \frac{1}{87.2727 + \frac{34.909}{23.09}} = \frac{1}{102.37}.$$

Prism : Isosceles triangle in section (Fig. 136).
$n—n$ = neutral plane.

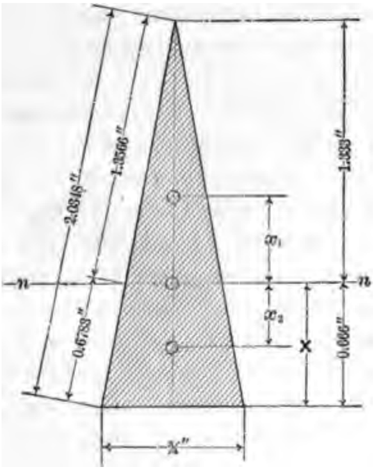

FIG. 136.

$X = 0.666$. Total area = 0.7500. Total perimeter = 4.8196.
$x_1 = 0.445$. Above $n—n$ = 0.3333. Above $n—n$ = 2.7131.
$x_2 = 0.355$. Below $n—n$ = 0.4166. Below $n—n$ = 2.1065.

$$R_1 = \frac{2.7131}{0.3333} = 8.14. \quad R_2 = \frac{2.1065}{0.4166} = 5.05. \quad c = \frac{1}{96}.$$

And

$$C_1 = \frac{1}{87.2727 + \frac{34.909}{8.14}} = \frac{1}{91.56} = 0.01092;$$

while

$$C_2 = \frac{1}{87.2727 + \frac{34.909}{5.05}} = \frac{1}{94.18} = 0.01061.$$

$$C_3 = 0.01061 - \frac{(1 - 0.01061)^2 - (0.01092)^2}{(1 - 0.01092)^2}$$
$$= 0.01061 - 0.00063 = 0.00998.$$

The section is not symmetrical, and deformation results.

TO DETERMINE THE CURVE OF DEFORMATION.

The versed sine of the arc coinciding with the centre of gravity of the whole section will be a measure of the deformation from the originally straight line.

Reference.

Let L = length of pattern or casting before contraction occurs.

$l_1 = L - LC_3$ = length of casting at distance x_1 from neutral plane n—n after contraction.

$l_2 = L - LC_2$ do. do. at x_2.

h = versed sine; amount of deformation $= r - H$.

$H = r - h$.

$d = x_1 + x_2$ = distance between centre of action of C_1 and C_2.

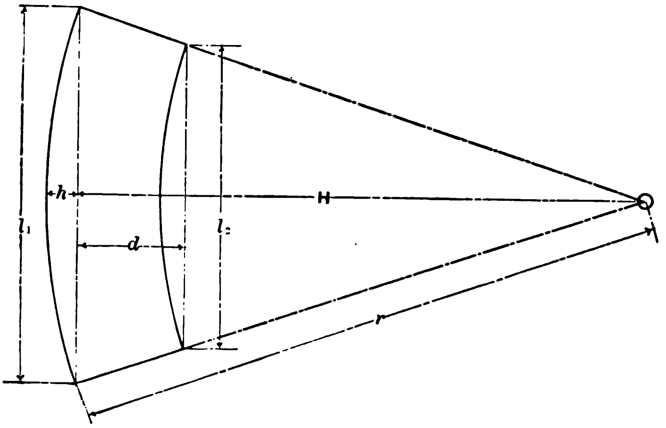

FIG. 137

$$H = \frac{\frac{l_1}{2} d}{\frac{l_1}{2} - \frac{l_2}{2}}; \qquad r = \sqrt{\left(\frac{l_1}{2}\right)^2 + H^2}.$$

In the above example of isosceles section, let $L = 36.375$ and $d = 0.8$; then will

$$l_1 = 36.375 - 36.375 \times 0.00998 = 36.0119775; \text{ and } \frac{l_1}{2} = 18.0059887$$

$$l_2 = 36.375 - 36.375 \times 0.0106 = 35.989425; \text{ and } \frac{l_2}{2} = 17.994712.$$

$$H = \frac{18.0059887 \times 0.8}{18.0059887 - 17.994712} = \frac{14.40479096}{0.011276} = 1277.47.$$

$$r = \sqrt{18.0059887^2 + 1277.47^2} = 1277.59.$$

$$h = 1277.59 - 1277.47 = 0.12 \text{ inch}.$$

The actual deformation h in an experimental casting was, as near as it could be measured, 0.10 inches.

Example : Moulded and flanged plate as per section Fig. 138.

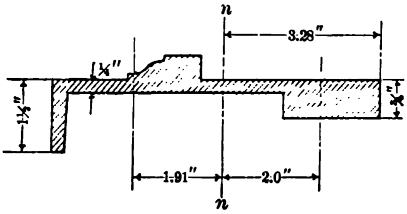

FIG. 138.

Pattern, 135 inches long; $c = \frac{1}{96}$; $d = 3.91$.

$$
\begin{array}{lll}
X = 3.28. & \text{Total area} = 3.7215 & \text{Total perimeter} = 18.11. \\
x_1 = 1.91. & \text{Above } n\text{—}n = 1.8965. & \text{Above } n\text{—}n = 10.30. \\
x_2 = 2.00. & \text{Below } n\text{—}n = 1.8250. & \text{Below } n\text{—}n = 7.81.
\end{array}
$$

$$R_1 = \frac{10.30}{1.8965} = 5.43. \quad R_2 = \frac{7.81}{1.825} = 4.28.$$

$$C_1 = \frac{1}{87.2727 + \frac{34.909}{5.43}} = \frac{1}{93.7} = 0.010671\,;$$

$$C_2 = \frac{1}{87.2727 + \frac{34.909}{4.28}} = \frac{1}{95.43} = 0.010478\,;$$

$$C_3 = 0.010478 - \frac{(1 - 0.010478)^2 - (1 - 0.010671)^2}{(1 - 0.010678)^2}$$
$$= 0.010478 - 0.000390 = 0.010088.$$

$$l_1 = 135 - 135 \times 0.010088 = 133.63812\,; \quad \frac{l_1}{2} = 66.81906.$$

$$l_2 = 135 - 135 \times 0.010478 = 133.5855\,; \quad \frac{l_2}{2} = 66.7927.$$

$$H = \frac{66.81906 \times 3.91}{66.81906 - 66.7927} = \frac{261.2625246}{0.02636} = 9911.32.$$

$$r = \sqrt{66.81906^2 + 9911.32^2} = 9911.54$$

$$h = 9911.54 - 9911.32 = 0.22 \text{ inch.}$$

The actual deformation measured from the casting was one-fourth of an inch.

Example: Panelled and flanged plate as per section Fig. 139. Pattern, 144 inches long.

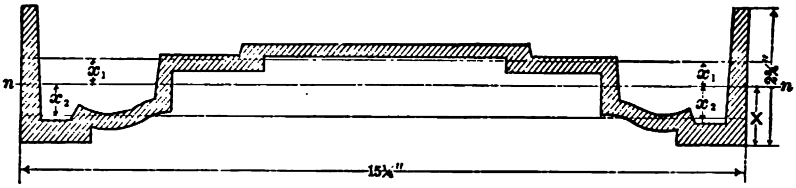

FIG. 139.

$$X = \frac{8.788303}{7.4158} = 1.18.$$ Total area $= 7.4158$. Total perimeter $= 45.528$.

$$x_1 = \frac{2.320012}{3.9398} = 0.59.$$ Above $n—n = 3.9398$. Above $n—n = 27.608$.

$$x_2 = \frac{2.35108}{3.476} = 0.68.$$ Below $n—n = 3.4760$. Below $n—n = 17.92$.

$$R_1 = \frac{27.608}{3.9398} = 7.0. \quad R_2 = \frac{17.92}{3.476} = 5.16. \quad d = 0.59 + 0.68 = 1.27.$$

$$C_1 = \frac{1}{87.2727 + \frac{34.909}{7.0}} = \frac{1}{92.26} = 0.01084 \text{ when } c = \frac{1}{96}.$$

$$C_2 = \frac{1}{87.2727 + \frac{34.909}{5.16}} = \frac{1}{94.03} = 0.01063.$$

$$C_3 = 0.01063 - \frac{(1 - 0.01063)^2 - (10.01084)^2}{(1 - 0.01084)^2}$$
$$= 0.01063 - 0.00043 = 0.0102.$$

$$l_1 = 144 - 144 \times 0.0102 = 142.5312; \quad \frac{l_1}{2} = 71.2656.$$

$$l_2 = 144 - 144 \times 0.01063 = 142.4693; \quad \frac{l_2}{2} = 71.2346.$$

$$H = \frac{71.2656 \times 1.27}{71.2656 - 71.2346} = \frac{90.506312}{0.031} = 2919.56 \text{ inches.}$$

$$r = \sqrt{71.2656^2 + 2919.56^2} = 2920.43 \text{ inches.}$$

$$h = 2920.43 - 2919.56 = 0.87 \text{ inch.}$$

The actual result in a casting was $\frac{7}{8}$ inch.

Example : Flanged gutter-shaped casting, as per section Fig. 140. Pattern, 144 inches long.

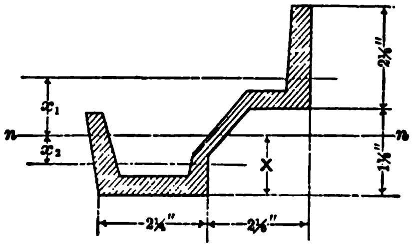

Fig. 140.

$$X = 1.460. \qquad R_1 = \frac{8.80}{1.578} = 5.58.$$

$$x_1 = 0.991. \qquad R_2 = \frac{8.95}{1.834} = 4.88.$$

$$x_2 = 0.839. \qquad d = 1.83\ ;\ c = \frac{1}{96}.$$

$$C_1 = \frac{1}{87.2727 + \frac{34.909}{5.58}} = \frac{1}{93.52} = 0.010693.$$

$$C_2 = \frac{1}{87.2727 + \frac{34.909}{4.88}} = \frac{1}{94.42} = 0.01058.$$

$$C_3 = 0.01058 - \frac{(1 - 0.01058)^2 - (1 - 0.010693)^2}{(1 - 0.010693)^2}$$
$$= 0.01058 - 0.00023 = 0.01035.$$

$$l_1 = 144 - 144 \times 0.01035 = 142.5096\ ;\ \frac{l_1}{2} = 71.2548.$$

$$l_2 = 144 - 144 \times 0.01058 = 142.4764\ ;\ \frac{l_2}{2} = 71.2382.$$

$$H = \frac{71.2548 \times 1.83}{71.2548 - 71.2382} = \frac{130.396284}{0.0166} = 7855.19.$$

$$r = \sqrt{71.2548^2 + 7855.19^2} = 7855.51$$

$$h = 7855.51 - 7855.19 = 0.32 \text{ inch.}$$

The actual result of four different castings varied between ¼ and ½ inch, due to unequal thickness of the castings from uneven ramming of the sand forming the mould.

EXAMPLES OF LONGITUDINAL CONTRACTION.

SECTION

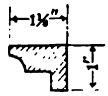

FIG. 141.

Length of pattern = 69.750 inches.
" casting = 68.875 "
Total contraction = 0.875 "

$$\text{Actual rate of contraction} = \frac{0.875}{69.75} = 0.01254. \quad c = \frac{1}{96}.$$

$$\text{Perimeter, } p = 3.670. \quad R = \frac{3.670}{0.515} = 7.12.$$

$$\text{Area, } a = 0.515.$$

$$\text{Calculated contraction, } C = \frac{1}{87.2727 + \frac{34.909}{7.12}} = \frac{1}{92.17} = 0.01084.$$

SECTION

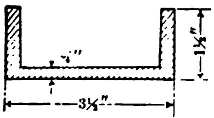

FIG. 142.

Length of pattern = 153.6875 inches.
" casting = 152.0622 "
Total contraction = 1.6253 "

$$\text{Actual rate of contraction} = \frac{1.6253}{153.6875} = 0.01057.$$

$$\text{Calculated rate, } C' = \frac{1}{87.2727 + \frac{34.909}{7.17}} = \frac{1}{92.17} = 0.01084.$$

$$\text{when } p = 11.875, a = 1.65625, \text{ and } c = \frac{1}{96}.$$

SECTION

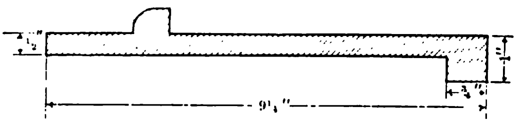

FIG. 143.

Length of pattern 154 inches.
" casting 152.375 "
Total contraction = 1.625 "

$$\text{Actual rate of contraction} = \frac{1.625}{154.0} = 0.010552.$$

$$\text{Calculated rate, } C = \frac{1}{87.2727 + \frac{34.909}{3.95}} = \frac{1}{96.11} = 0.010404;$$

in which $p = 21.5$, $a = 5.442$, $R = \frac{21.5}{5.442} = 3.95$, $c = \frac{1}{96}$.

CIRCULAR DISK.

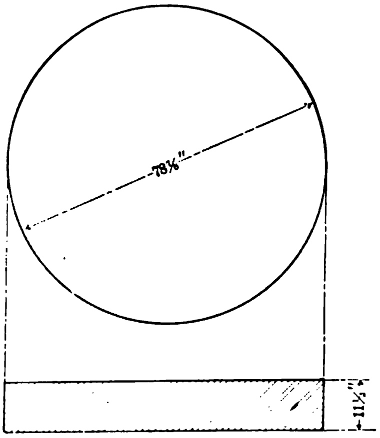

FIG. 144.

Diameter of pattern = 78.8750 inches.
Diameter of casting = 78.5625 "
Total contraction = 0.3125 "

$p = 180.7500$ inches. $c = \frac{1}{96}$.
$a = 907.0625$ sq. inches.

$$\text{Actual rate of contraction} = \frac{0.3125}{78.875} = 0.00396.$$

$$\text{Calculated rate, } C = \frac{1}{87.2727 + \frac{34.909}{0.199}} = \frac{1}{262.69} = 0.0038;$$

$$\text{when } R = \frac{180.75}{907.0625} = 0.199.$$

SLOTTED AND FLANGED PLATE.

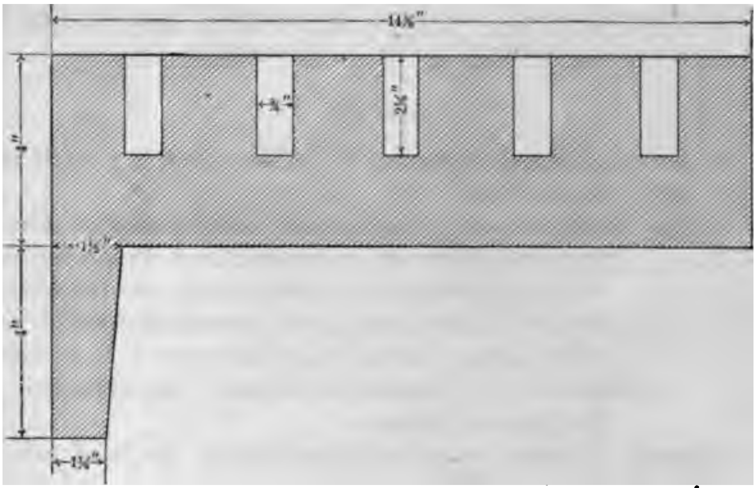

FIG. 145.

Length of pattern = 123.75 inches.
Length of casting = 122.75 "
Total contraction = 1.00 "

$$\text{Actual rate of contraction} = \frac{1}{123.75} = 0.00809.$$

The slots were in short lengths, equally distributed throughout the whole length of the plate, so that the average perimeter and area of the section was a mean between that of the slotted and solid portions.

For the slotted sections: For the solid portions of the section:

$$R = \frac{p}{a} = \frac{70.25}{56}. \qquad R = \frac{p}{a} = \frac{45.25}{64}.$$

$$\text{Hence the average } R = \frac{70.25 + 45.25}{56 + 64} = \frac{115.5}{120.0} = 0.9625,$$

and the calculated rate of contraction is

$$C = \frac{1}{87.2727 + \frac{34.909}{0.9625}} = \frac{1}{126.27} = 0.00792.$$

INITIAL STRESSES DUE TO UNEQUAL CONTRACTION.

With the aid of the modulus of elasticity, stresses due to the variations in contraction can be determined.

Reference.

Let E = modulus of elasticity, of the iron used, in pounds per square inch.

F = tensile or compressive force, respectively, resulting from the difference in contraction between the elements of the cross section in pounds per square inch.

L = length of element of section throughout which the difference of contraction is distributed, in inches.

l = difference in contraction between the elements in question, in inches.

Compression occurs in the elements having the least rate of contraction, tension, vice versa.

For cast iron E = 17,000,000 pounds.

$$F = \frac{lE}{L}.$$

Example: four-armed flanged ring, as per diagram (Fig. 146).

$$X = \frac{1.5 \times 0.75 + 3 \times 3 + 2.44 \times 0.375}{1.5 + 3 + 2.44} = \frac{11.04}{6.94} = 1.6 \text{ inches.}$$

For rim $R = \frac{p}{a} = \frac{23.0}{6.94} = 3.31$, for which $C = \frac{1}{97.81} = 0.010224.$

For arm $R = \frac{p}{a} = \frac{9.5}{2.125} = 4.47$, for which $C = \frac{1}{95.08} = 0.010517.$

Circumference of neutral plane = 28.3 × 3.1416 = 88.90728 inches, which will contract 88.90728 × 0.010224 = 0.90899 inch.

The contracted diameter $= \frac{88.90728 - 0.90899}{3.1416} = 28.0106$ inches.

The contraction of the arms = 28.3 × 0.010517 = 0.2976 inches, and the contracted length = 28.3 − 0.2976 = 28.0024 inches; hence the difference in contraction between the rim and arms = L = 28.0106 − 28.0024 = 0.0082 inch, which is distributed over a length L = 7.125 + 7.125 = 14.25 inches. Therefore, $F = \frac{0.0082 \times 17000000}{14.25} = 9782$ pounds per square inch. This

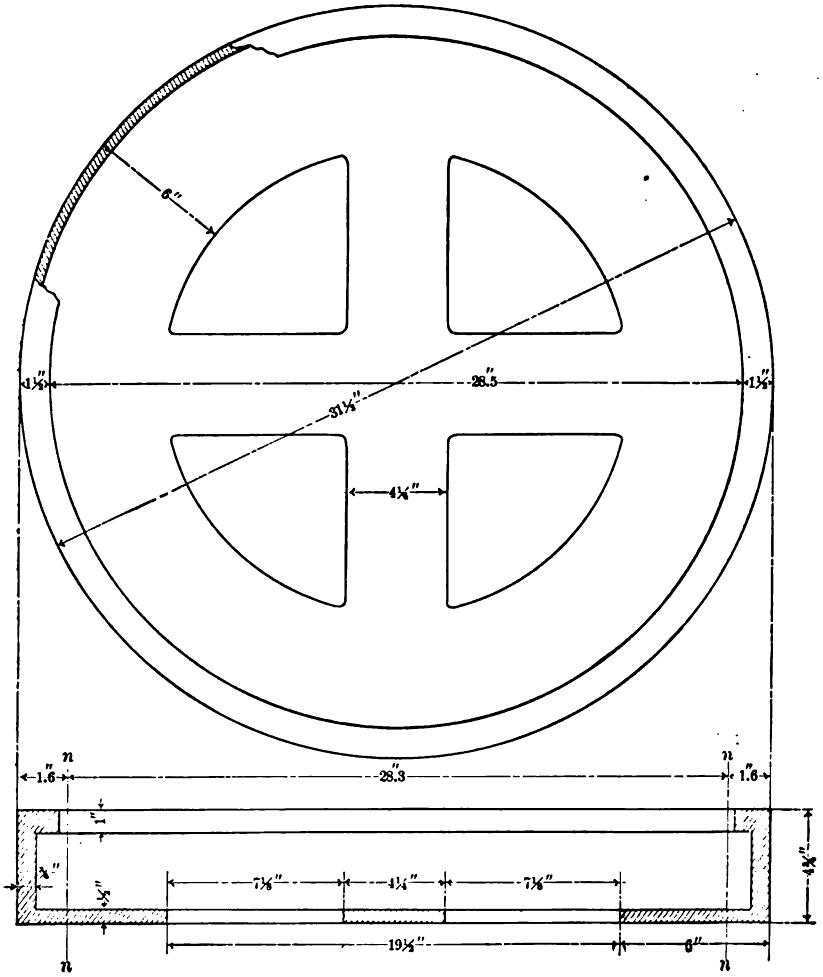

Fig. 146.

Outside diameter, 31.5 inches.
Neutral plane, 28.3 "

force, due to the diminished rate of contraction of the rim, can be reduced by hastening the cooling of the rim, or by the addition of auxiliary plates cast alongside of the arms in the four spaces, to increase the time of cooling of the arms.

Were a hub cast on at the intersection of the arms, resulting in a reduction of the length *L* for the distribution of the contraction, fracture in the arms would be probable. In fact, a casting was made as indicated, having a hub and two lugs extending out upon the two opposite arms, cast on, which caused one of the arms to crack and separate between the lug and rim. After reducing the size of the hub and materially that of the lugs and hastening the cooling of the rim, a sound casting was obtained.

CONCLUSIONS.

The deformation of prisms due to unequal contraction can be overcome by providing counter deformation in the pattern, or by the addition of auxiliary parts which can be readily removed from the casting. Generally, the section should be so subdivided or designed that the ratios R are alike around the centre of gravity of the section.

In complex machinery castings the design should be so modified or chosen that these will result in the least differences in the rate of cooling, or ratios R of the different members. Sudden changes in form cause severe initial stresses, if not fracture, and should be rigidly avoided.

Imperfectly proportioned flanges, ribs, or gussets added to the main body of a casting, for either the purpose of increasing the strength or connections, may be sources of weakness.

Hollow cylindrical columns, although cast of even thickness and left in the mould until cold, may become crooked by reason of the unequal rate of cooling between the upper and lower halves, due to the currents of air passing through the column and clinging to the under side of the upper half after the core arbor is removed, which is usually done shortly after pouring and while the casting is still red hot. This deformation is avoided by stopping the ends with sand immediately after the withdrawal of the core.

Greater attention to the laws of cooling and correct forms and proportions of castings will result in increased strength and economy, besides the avoidance of annoying crooked castings and mysterious breakdowns.

DISCUSSION.

Mr. W. J. Keep.—Mr. Schumann has presented much of the existing knowledge regarding cast iron in a very condensed form. A large portion of this knowledge has resulted from the investigation of the Testing Committee, and is to be found in its monographs in the Society's *Transactions*.

He treats cast iron as though it were a definite substance with fixed and known qualities, whereas no two castings are exactly alike. He pays no attention whatever to the chemical composition of the castings that he treats. For example, he says that slow cooling increases the resistance to shock, whereas this depends upon the chemical composition of the casting. If silicon is so low as to make the casting brittle, this is true ; but if the silicon is high enough to entirely remove brittleness, then any enlargement and loosening of the crystals by slow cooling will lessen resistance to shock as well as to a dead load.

The author assumes that the decrease in the rate of cooling due to an increase in the size of a casting is directly proportional to the shrinkage, which is not the case. The only comparison of test bars of various sizes that should be made is of those which have been cast at one time under exactly similar conditions and from iron of uniform chemical composition. If the same iron has been put into all of the moulds, then any difference in the chemical or physical composition in the test bars of different sizes, will have been caused by the variation in the time of cooling.

Mr. Schumann has used the term contraction, when the common usage the world over is to call this decrease in size of a casting shrinkage. If the shrinkage of a series of test bars of different sizes made as just described is plotted, the line joining the records will be a part of an ellipse. Now if we vary the silicon and pour with this iron another set of bars and plot the shrinkages, the curves will be another part of the same ellipse ; that is, the curve will be different for each composition of iron. The curves resulting from the plotting of the *strength* of the same test bars is a part of a parabola, and the curve from another set of bars with the silicon varied will be another part of the same parabola. Professor Benjamin, in the discussion of the paper at the St. Louis meeting, "Strength of Cast Iron," proposed a revised formula for computing the strength of one size of casting from data obtained by testing a test bar of a different size. Mr. Schumann now proposes a formula to compute the shrinkage of any size of casting. If the records obtained by either of these formulas are plotted, the curve will be a straight line, which does not conform to the record of the actual test bars. A graphic solution for both shrinkage and strength seems to be the only one which will take in all of the conditions. By this method the shrinkage of any section of a casting can be approximated with very little calculation.

The author speaks of a definite shrinkage of a one-inch square test bar for an average quality of foundry iron. As each size of casting, to obtain the best results, requires a different percentage of silicon, so as to bring the shrinkage of each to $\frac{1}{8}$ of an inch per foot, the one-inch test bar made with each size of casting must have a different shrinkage, and there can therefore be no such thing as an average quality of foundry iron. He says also that the size of the test bar should vary with each variation of combined carbon. The percentage of silicon determines the quantity of combined carbon. Silicon can be varied with the greatest facility, and by its decrease of combined carbon it decreases shrinkage.

The thing desired is a means of determining the percentage of silicon without a chemical analysis, and the variation in the shrinkage of any *one* size of test bar will show this.

Mr. Schumann states that in castings in which a larger mass is joined to a smaller mass the greatest shrinkage will occur in the larger mass.

Thinking this statement in error, I made the following castings:

Fig. 147 has the cross section of his Fig. 135.

Fig. 148 has the cross section of the portion of Fig. 147 from the base to the line *n—n*.

Fig. 149 has the cross section of the portion of Fig. 147 from the line *n—n* to the apex.

Fig. 150 has the cross section of Fig. 134, but is one-fourth size to conform in size with Fig. 147.

Fig. 151 has the cross section of Fig. 150 from the base to the line *n—n*.

Fig. 152 has the cross section of Fig. 150 from the line *n—n* to the top.

Fig. 153 has a cross section one-half inch square. Fig. 154 has a cross section $\frac{1}{10}$ inch x 1 inch. These are the ordinary "Keep's test bars."

All the test bars were one foot long, having been cast in yokes $12\frac{1}{8}$ inches between the ends. The castings instantly shrunk away from the chilling faces, the gates were broken off before

Number of Figure	Shape and Dimensions of Test Pieces.	Shrinkage per foot on Thick Edge.	Shrinkage per foot on Thin Edge.	Convex bend per foot at Thick Edge.	Concave bend per foot at Thin Edge.	Ratio Cubic inches Contents divided by Square inch Cooling Surface.
147	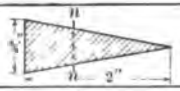	.109"	.133"	.025"	.011"	.156
148	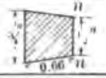	.110"		.012"	0	.161
149	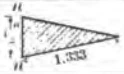	.116"	.124"	.025"	.011"	.104
150	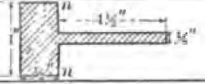	.127"	.135"	.010"	.005"	.113
151	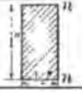	.114"		0	0	.166
152	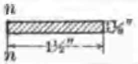	.134"	.135"	0	0	.060
153	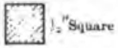	.121"				.125
154	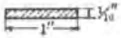	.140"				.041

Schumann

American Bank Note Co., N.Y.

the iron had set, and the sand of the mould was not held by a flask, so that the shrinkage of the casting was not influenced in any way. The iron was taken from the cupola in a 40-pound ladle at the middle of the heat, and it took 1½ minutes to fill the moulds.

The average strength of three ½-inch square test bars was 416 pounds, the average deflection 0.25 inch; deflection at 300 pounds, 0.17 inch; set at 300 pounds, 0.02 inch; depth of chill, 0.05 inch. The percentage of silicon is by Messrs. Dickman & Mackenzee, of Chicago. The following are estimated: G. C, 3.05; C. C, 0.09; P, 0.975; S, 0 088; Mn, 0.50. None of these castings behave as suggested by Mr. Schumann. In every case the thin edge shrinks most and is concave. (The reason for a difference between the curves on the thick and thin edges was that the casting was slightly strained by the gate which was placed on the top at the centre. The shrinkage at the thick edge of Fig. 150 is more than Fig. 151, but such variations are very common in cast iron and are caused by local conditions.) Each casting conforms to the law that a small casting from the same iron shrinks most.

If you will take my shrinkage chart (*Transactions*, vol. xvii., page 683), and will draw a curve for .121 shrinkage of a ½-inch bar, and locate on it the points from the column of ratios in Table I., you will find that the actual shrinkages correspond with the approximations found from the chart, which speaks well for the graphic method.

In any casting consisting of thick and thin portions, neither portion will shrink exactly as indicated by the shrinkage chart, because the thin portion receives much heat by conduction from the thick part, and the thick part will therefore cool faster and the thin part slower than if separated from each other. If taken as a whole, the shrinkage will be as the chart indicates.

Mr. Schumann and all founders have come across many castings in which the thin portion seems longer than the thick portion after the casting is cold. A casting with the silicon of Fig. 155 or 156, or like Fig. 157, in which the thin part is attached to the thick part only at the ends, each will show a convex curve at the thin edge. In a casting with a thin web, having a heavy edge on four sides or circular, below the web, the thin centre will bulge up as shown by the dotted line. I think these examples cover all those given by Mr. Schumann. There is no deviation from the general law that the thin casting shrinks most, and there is no need of reference to "volumnar contraction." In the paper, "Keep's Cooling Curves," *Transactions*, vol. xvi., page 1126, Fig. 308, referring to the cooling curve of a test bar $\frac{1}{8}$ inch x 1 inch, and the curve of the bar one inch square, and imagine a curve between them for a bar $\frac{1}{2}$ inch x 1 inch, and supposing that in the sections of Figs. 150 to 152 the thin parts are one-eighth inch thick, and the thick parts are $\frac{1}{2}$ inch wide x 1 inch high, the part of the casting one-eighth inch thick will become crystalline in one minute, and in five minutes it will shrink .068 inch per foot; at this time the thick portion will just become crystalline and will begin to shrink. In becoming cold the thick part will shrink .114 inch while the thin part will complete the remaining .068 inch. This will leave the thin part .046 inch longer than the thick part and it will bow away from the thick part or sideways in Fig. 157. If the thick part of Fig. 157 was attached throughout the length by a very thin web, in such a way that the shrinkage could progress in the same way as when separated, the thick part would be concaved toward the thin part.

FIG. 155

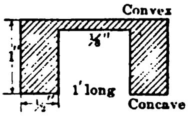

FIG. 156

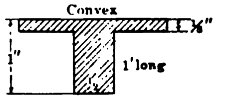

FIG. 157

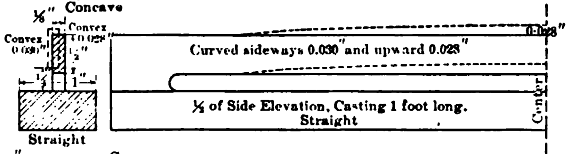

FIG. 158

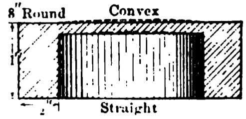

Schumann

Mr. J. L. Gobeille.—Those of us who saw Mr. Keep's device at work in Detroit, learned a little about contraction of metal. The fact is, there is a moment where there is a temporary stoppage and then a slight expansion, and we may have all the formulas that have ever been put before the American Society—

which would be quite a lot—and never learn how to design a pattern so that the casting could be properly made. Now if you will imagine a cylinder of any size with a smaller cylinder at right angles to it, the smaller cylinder having a flange, you will see that the flange and the larger cylinder will continue to contract after this moment has been reached for the smaller cylinder. The inside nearest to the core being less apt to cool than the outside, there will be a strain on the inside while the outside will remain apparently perfect. Then this moment being passed and this temporary expansion moment also, it continues again to contract, and that casting goes in the machine and is put out with the supposition that it is perfectly sound; yet it is unfit for heavy duty. For an extreme illustration of a difficult pattern to cast, imagine a plate one-fifteenth of an inch thick and one foot by two feet in size; on three sides of this, a flange one inch and an eighth thick, but the thickness of the other long side is still only one-fifteenth of an inch. That is a somewhat difficult thing to make by means of any formula. It will act just contrary to ordinary rules. You would think from the thickness of the flange, cooling slower than the thin edge, that there would be a fracture, or a strain that would lead to breakage. But that is not so. Frequently in mountainous countries it is necessary to make stoves very light. In fact I have made several cast-iron stoves of good size, large enough for an ordinary family, the contract being that they should weigh less than 95 pounds, because they had to be carried on the backs of mules over mountains, and there was a limit of 100 pounds to every package. When you come to decide in the drawings for castings of one-fifteenth or even less in thickness which have to be carted over mountains on mules, it becomes a question of expedients—of casting on other parts which can be easily broken off, and so designing a pattern that one may be able to take observations of any special piece while cooling. It is not unusual in some castings of that kind to make ten or even twelve before you get a good one. Each one will develop some separate type of meanness. I believe that the whole secret of designing patterns for castings, especially for steel castings—is uniformity. I might say right here that the steel business, perfect as it is, is yet an experiment, for while some steel works insist on having a quarter of an inch allowance for shrinkage, others want a minus quantity. The difference in the allowance for shrinkage in certain identical forms in this country is five-sixteenths of an inch—the difference demanded by the proprietors. Every one has a dead secret and no one is to divulge why they have this or that allowance. What we want is uniformity of design in the parts, so that one part, especially where it connects to larger parts, will not be so light as to cool too quickly; and this moment of temporary stoppage, and the consequent expansion before again contracting, must be nearly uniform throughout the casting. A simple expedient for a casting such as I have suggested (the larger cylinder with a smaller one at right angles, each with a heavy flange) is to cast on the smaller cylinder four ribs—which hold the heat and bring the moment of temporary stoppage to the point of the two larger members on either end.

Mr. Gus. C. Henning.—The paper was received so late that neither Mr. Keep nor myself had a chance to study it up carefully, but Mr. Keep with his usual energy "pushed right ahead," as they say, and made a few tests, and then compared results with the papers that have been presented here, mainly by himself on behalf of the committee. I would like to add a few remarks of my own. In Mr. Schumann's paper I was struck by the facility of some investigators using mathematics and determining the same things that others do practically who are not used to handling formulas. And of course I have noticed that Mr. Keep points out here that the results pointed out in the committee work are in most respects practically identical with what Mr. Schumann now states. But of course Mr. Schumann is working under slightly different conditions. He is working on very large masses under the conditions existing in a foundry, while in our case we are doing experimental work, or scientific experimental work, in a foundry under practical conditions, but conditions which we could readily control. It is a different thing to make a casting four feet long from making a casting two feet long, especially when simply making straight bars in the way we did instead of these rather difficult castings, because the metal running in the mould and the different thickness of sand on the sides of the metal exert great influence, as Mr. Schumann points out. In our case we tried to control that by always having the sand outside of the bar about the same in every case. If you have a very thin layer of sand, as Mr. Schumann points out here, then the effect of rapidity of cooling will be very marked, while if you keep the thickness of the sand—I did not mean to say which would be quite a lot—and never learn how to design a pattern so that the casting could be properly made. Now if you will imagine a cylinder of any size with a smaller cylinder at right angles to it, the smaller cylinder having a flange, you will see that the flange and the larger cylinder will continue to contract after this moment has been reached for the smaller cylinder. The inside nearest to the core being less apt to cool than the outside, there will be a strain on the inside while the outside will remain apparently perfect. Then this moment being passed and this temporary expansion moment also, it continues again to contract, and that casting goes in the machine and is put out with the supposition that it is perfectly sound; yet it is unfit for heavy duty. For an extreme illustration of a difficult pattern to cast, imagine a plate one-fifteenth of an inch thick and one foot by two feet in size; on three sides of this, a flange one inch and an eighth thick, but the thickness of the other long side is still only one-fifteenth of an inch. That is a somewhat difficult thing to make by means of any formula. It will act just contrary to ordinary rules. You would think from the thickness of the flange, cooling slower than the thin edge, that there would be a fracture, or a strain that would lead to breakage. But that is not so. Frequently in mountainous countries it is necessary to make stoves very light. In fact I have made several cast-iron stoves of good size, large enough for an ordinary family, the contract being that they should weigh less than 95 pounds, because they had to be carried on the backs of mules over mountains, and there was a limit of 100 pounds to every package. When you come to decide in the drawings for castings of one-fifteenth or even less in thickness which have to be carted over mountains on mules, it becomes a question of expedients—of casting on other parts which can be easily broken off, and so designing a pattern that one may be able to take observations of any special piece while cooling. It is not unusual in some castings of that kind to make ten or even twelve before you get a good one. Each one will develop some separate type of meanness. I believe that the whole secret of designing patterns for castings, especially for steel castings—is uniformity. I might say right here that the steel business, perfect as it is, is yet an experiment, for while some steel works insist on having a quarter of an inch allowance for shrinkage, others want a minus quantity. The difference in the allowance for shrinkage in certain identical forms in this country is five-sixteenths of an inch—the difference demanded by the proprietors. Every one has a dead secret and no one is to divulge why they have this or that allowance. What we want is uniformity of design in the parts, so that one part, especially where it connects to larger parts, will not be so light as to cool too quickly; and this moment of temporary stoppage, and the consequent expansion before again contracting, must be nearly uniform throughout the casting. A simple expedient for a casting such as I have suggested (the larger cylinder with a smaller one at right angles, each with a heavy flange) is to cast on the smaller cylinder four ribs—which hold the heat and bring the moment of temporary stoppage to the point of the two larger members on either end.

Mr. Gus. C. Henning.—The paper was received so late that neither Mr. Keep nor myself had a chance to study it up carefully, but Mr. Keep with his usual energy " pushed right ahead," as they say, and made a few tests, and then compared results with the papers that have been presented here, mainly by himself on behalf of the committee. I would like to add a few remarks of my own. In Mr. Schumann's paper I was struck by the facility of some investigators using mathematics and determining the same things that others do practically who are not used to handling formulas. And of course I have noticed that Mr. Keep points out here that the results pointed out in the committee work are in most respects practically identical with what Mr. Schumann now states. But of course Mr. Schumann is working under slightly different conditions. He is working on very large masses under the conditions existing in a foundry, while in our case we are doing experimental work, or scientific experimental work, in a foundry under practical conditions, but conditions which we could readily control. It is a different thing to make a casting four feet long from making a casting two feet long, especially when simply making straight bars in the way we did instead of these rather difficult castings, because the metal running in the mould and the different thickness of sand on the sides of the metal exert great influence, as Mr. Schumann points out. In our case we tried to control that by always having the sand outside of the bar about the same in every case. If you have a very thin layer of sand, as Mr. Schumann points out here, then the effect of rapidity of cooling will be very marked, while if you keep the thickness of the sand—I did not mean to say the thickness for all same bars, but the same relative thickness for all the bars; larger for the large bars and smaller for the small bars, so that the rate of cooling is practically the same in all the bars—then you will probably get results which are more nearly comparable, and in our work we have always been cautious to try to eliminate all possible disturbing influences. For that reason, I think, we have found results which, it may seem, in some respects differ from ordinary foundry practice, because we had to begin on a uniform basis before we went into the more complex problems such as you will meet in most ordinary work when using patterns of almost any shape.

I think on the second page of Mr. Schumann's paper he does not speak with sufficient precision in regard to the shrinkage, or contraction, as he calls it, of bars at high temperatures. At the top of the page he says that the "changes are greater than the changes in heat," but does not adduce any proofs for this statement, and makes no allowance for "recalescence." Well, we have found distinctly, that, provided the silicon was of the proper proportion, it did not vary that way at all; that in fact there was an expansion there which was very marked. It is the same expansion which I think has been noticed as long ago as 1834; only while it was known to exist in some cases, it had never been defined until these experiments made by Mr. Keep for the committee, and the exact conditions of expansion and contraction, as affected by volume of casting and rate of cooling, are clearly shown in the various tables and curves given in our reports. Between the liquid and solid states a very marked expansion, instead of constant contraction under decreasing temperature, was found, and that has been traced, as you will see from the paper on cooling curves, not only in cast iron but also in wrought iron and steel; there is not a steady contraction, but there is a distinct and very large and long-continued expansion, until the temperature of the iron falls from melting to a rather dull red. But after that moment there is always a continued contraction with some direct relation to the fall in temperature. We have not yet been able to have a furnace constructed which will lend itself to determine the rate of contraction with scientific precision, but we hope to be able to do that very soon, and then to report the results to the Society later on. I think Mr. Schumann's paper is a very valuable one. It shows what accuracy can be reached by careful study of the materials and methods which are used in the foundry, although I believe that the methods can hardly be used in most foundries for the reason that they have not men like Mr. Schumann at the head who know how to handle formulas and have time to work them out. They go by rule of thumb. But I am sure that Mr. Schumann's paper ought to be a very valuable one for our better foundries.

Mr. Schumann.—I hope that this subject will be fully discussed, because it is a very important one. What this paper contains are merely the principles. The point is, Can we determine the deformations in castings on a thoroughly rational and scientific basis? I maintain that we can. Can we not possibly, by unanimous consent, discuss the question more fully, pro and con?

I desire to take up Mr. Keep's test bars regarding the shrinkage between the yokes. After gentlemen have said what they desire, I would ask the liberty of making a few further remarks.

Mr. Henning.—I would like to say to Mr. Schumann that that will undoubtedly come up when the committee reports. We have been trying to get such information from practical founders, but they do not come forward. Mr. Schumann is the first who has ever given any work of this kind on an accurate basis to tell exactly what has happened in a foundry. Most of our founders are practical men who do not care about that side of it at all. So long as their castings come out all right, that is all they care about. If we had more of this kind of work, we would not have to do so much of that work ourselves, beginning from the bottom up and almost despairing of getting to the end of our investigations.

Mr. F. H. Richards.—This subject strikes very close to practical results, and I hope that it may be continued, not only during this session but at some future time, and that all who are in a position to do so will give it attention. In a recent case in my own experience. shafts forming parts of complex castings, and varying from 1½ inches to 4 inches in diameter. and from 2 feet to 8 feet in length, have been made in considerable numbers of ordinary good foundry iron, the chemical composition of which I do not know, and it has been found in those cases that the length of the shaft will vary from an eighth to a quarter of an inch by the handling in the foundry, when made from the same pattern. It was also found that the castings came more uniform if they were poured rather cool, if the iron is not too hot. Such instances are, indeed, quite well known to almost every one who has had much experience in that kind of work.

Mr. William Kent.—This paper was not issued long enough before the meeting to enable members to study it and form a correct conclusion as to how to discuss it. So I think it would be well if every one who is able to discuss it, would say what he has to say to-day, and then that this discussion should be continued at the meeting next spring. The subject of the physics of cast iron has been discussed in the Mining Engineers' Society for some years, and we have discussed some aspects of it in this Society for four or five years, but the end is not yet and the discussion ought to be continued. We now have something to study. We have some figures and facts and formulas here that require thought; and after we have studied them we may be able to discuss them. So I hope that this subject will in some sort of way be made a feature of the next meeting of the Society—the Physics of Cast Iron.

Mr. Jno. T. Hawkins.—I had occasion at a former meeting of the Society, a year ago I think, when a paper on this subject was offered, to mention the fact that in my experience I had discovered that for certain kinds of castings, as uniform in design, dimension, and character as could obtain in a lot cast from the same pattern, there was always a variation in the amount of shrinkage as influenced by the temperature at which they were poured. There was a disposition at that time to consider that as of no account and it was quite strongly contested in the paper and the discussion that took place at that time. But I am glad to see that the paper now under discussion does take that feature into consideration, and takes cognizance of the well-known fact that the slower any liquid solidifies—in other words, crystallizes—the larger are the crystals, and presumably the less is the density of the solid. It occurred to me that, possibly, the obscured variation in shrinkage in similar castings involved this physical process. I think that that was the cause, really, for difference in the shrinkage of uniformly designed pieces which were cast and were in every way exactly alike, except that they were poured at different temperatures. I have pictured to my mind something of this kind of condition, particularly in castings of very considerable volume, that when the cooling from a high liquid temperature takes place, at first, as has been shown and as we generally have admitted, an expansion takes place from the high liquid temperature down to somewhere near the temperature where solidification takes place. Now, in a casting of very considerable volume we know that the superficies must become solidified before the interior, and that a slower cooling of the interior will cause larger crystals and make the density of the central portion of the body of the casting less than it would be if it all cooled at an equal rate with the exterior. I think that there is a point which requires to be studied and experimented upon ; that is, that in castings which solidify, as they all do in fact, upon the superficies first, leaving a liquid interior enclosed by a comparatively solid shell, and then by the slower formation and arrangement of the crystals in this liquid interior body after the solidification of the exterior, we have that which does modify the shrinkage to some considerable extent—to so considerable an extent that any attempt to classify or tabulate the rate of contraction as being governed by the amount of silicon in it, becomes vitiated very much. And I think that this aspect of the question should be taken more into practical and experimental consideration. I, unfortunately, have no means now—having been out of business for some time and expecting to be for a good while longer—to make any further experiments in this direction ; but many of you have, and it is to be hoped you will make them.

Mr. John A. Brashear.—Perhaps I may be able to throw a little light on this phase of the subject, though it is perhaps hardly to be expected that a person interested in so different a material as glass could throw any light on cast iron. But I have been very much interested in this subject in the last twenty years, and have often thought it a pity we could not look into a casting as we can into a piece of glass. In the construction of a great telescope glass disk, one of the most difficult things which is met with is to control the shrinkage in finally cooling the glass block which is melted down to form the disk. In working an object glass very small changes of temperature have a serious detrimental effect, and as we are dealing with hundred thousandths of an inch, and often millionths of an inch, in the construction of some of the surfaces, we can study changes which are going on, in a very marked degree. Now it is absolutely necessary in the construction of great telescope objectives that the glass be homogeneous in its annealing. A great many studies have been made upon this subject. Dr. Schott and Dr. Abbe of Jena, through the help of the Prussian Government, spent about $15,000 or $20,000 upon this very subject. They are now producing glass of most beautiful quality so far as its annealing is concerned, and they find that when the temperature comes down to the time of the formation of the crystalline structure of the glass, that then is the critical period in making any perfect telescope objectives; and this temperature is found to be about the temperature of incandescence or about 997 degrees Fahr. I have no doubt there will—in the investigation of this subject—be found a time which is critical in the cooling of a casting. I sincerely believe if you want to make strong and perfect castings, that if you can take them from the mould and place them in an oven of some sort where the temperature conditions can be arranged so that the molecular structure may have time to form in a natural and normal condition, you will vastly improve the castings. After all, what is annealing? It is simply allowing time for the molecular structure to form naturally without one part pulling upon the other. Those of you who have broken a rectangular box casting through a corner have seen that the molecular stress has not only pulled the crystals apart but formed very interesting geometrical figures, the shape of which is a function of the geometrical contour of the casting itself. I believe if the subject of proper cooling of castings be carefully and critically studied, it will be of great value to the mechanic and to the physicist. There is no doubt in my mind that there is a critical time in the cooling of any kind of a metal casting, the same as there is in glass. As we cool our castings now, the outside cools rapidly, and this goes on in a lesser degree until the centre of the casting is reached.

I trust the investigations now being carried out by your committee will throw new light upon this interesting subject. I firmly believe that all material which is first made fluid by heat in order to put it into the shapes we wish it for use, must of necessity cool so slowly and regularly that the molecules will have ample time to arrange themselves in the order of nature, else molecular strain is inevitable.

Mr. Webster.—I desire to call attention to an experiment made by Mr. I. Lothian Bell in 1880. This "apparatus consisted of an upright cylindrical mould, 6 feet long by 6 inches in diameter." He measured the expansion which took place from time of pouring. His results are given with description of apparatus used in the *Journal of Iron and Steel Institute*, No. 1 of 1880. His results are plotted on the diagram which I now show you (Fig. 159). The expansion lengthwise was, at the end of three hours, $\frac{20}{32}$ inches; and at end of six hours had contracted to original length of 72 inches; after this the casting continued to decrease in length for a period of eighty-four hours, as shown by the heavy line in the diagram. Mr. Bell took no other measurements whatever, and his results cannot be relied on as showing any increase in volume. Recently Mr. Keep has made similar experiments, but he also neglected to take measurements enough to show increase or decrease in volume, and until this is done we can place no reliance whatever on the results obtained.

Mr. Brashear.—Did he have the temperature coefficient with it?

Mr. Webster.—No; they are not here. But here it says for a period of five hours in a mass only 6 inches in diameter. So that indicated expansion did extend over a period after the material was solid.

Mr. Henning.—That depends on the size of the casting. We found on a 4-inch bar that it took four hours, and on a 6-inch bar it took five hours.

Mr. William Kent.—It seems that we will have to continue this discussion at the next meeting, and as many members' minds will be devoted to the subject of cast iron at that meeting, I wish some one would undertake to answer this question: What is the difference between the Hanging Rock and Salisbury cold-blast charcoal irons, which gave extraordinary records for strength twenty or thirty years ago, and the ordinary cast iron of the present day which we are using in castings? Is it only a chemical difference or a physical difference, or is it something in the nature of a mystery that no one has yet explained? We do not believe much in mystery at the present day; we say that physical phenomena should be explained by science. But if it is possible to make in the blast furnace, as has been made, iron running from 35,000 to 45,000 pounds tensile strength, why should the world continue to use iron which has only from 12,000 to 15,000 pounds tensile strength?

Mr. Johnson.—I would just like to say in answer to Mr. Kent's question about the Salisbury and Hanging Rock charcoal iron,

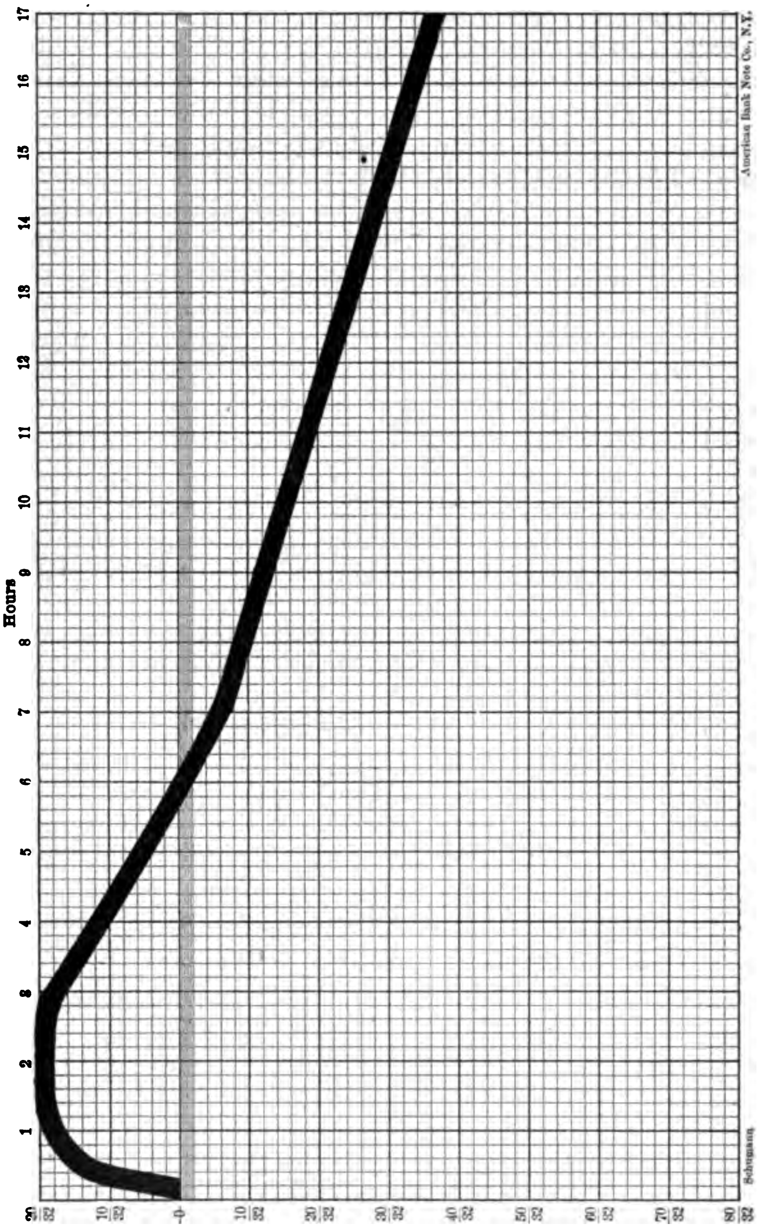
Hours
0
1
2
3
4
5
6
7
8
9
10
11
12
13
14
15
16
17
20/32
10/32
0
10/32
20/32
30/32
40/32
50/32
60/32
70/32
80/32
Schumann
American Bank Note Co., N.Y.

FIG. 159.

which used to be obtainable in the old days, and which were so much superior to anything else of their time or ours (as he thinks), that being made with charcoal didn't have a great deal to do with it, and that iron of a similar character can be had to-day made with coke.

You, Mr. President, have already explained that the strength of this iron is due to low phosphorus. At Emberville, Tenn., they make a special low phosphorus iron; that is, the phosphorus is almost down to the Bessemer limit. The silicon is low, and the sulphur is guaranteed to be less than one-twentieth of one per cent. This iron has been made repeatedly to break up to 40,000 or 42,000 pounds per square inch. That is about what the strength of the Salisbury iron seems to have been, and I think it is due to the same causes—low sulphur and phosphorus and moderate silicon.

Mr. Jno. T. Hawkins.—I would like to add one more word. I would like to corroborate what a recent speaker has said as to the futility of casting a test bar within a rigid yoke, if one of the objects to be attained is to determine by its length the amount of shrinkage. This physical fact seems to be pretty well established—I think no one disputes it—that in pretty nearly all substances which are ordinarily capable of existing in the three states of matter, in the passage from the liquid to the solid state there is, at some critical period at or near this point, a very great change in its volume, and that the point of maximum density is not in the solid, for any substance; that it is somewhere in the liquid state near the point of solidification. That seems to be abundantly proved for cast iron by the fact that a piece of solid cast iron of any temperature, if put in the liquid metal at any temperature whatever, will float upon it. There may be some things which modify this to some extent, but it is almost universal. Ice floats upon water, showing that the density of the solid is less than that of the liquid. So that I maintain that, somewhere about the point of solidification there is some critical process going on in the arrangement of the particles or crystals of the material which would very much vitiate any attempt to determine the shrinkage, if the bar was cast between rigid abutments; because if there comes a period somewhere near solidification, where it considerably expands, as we know it does, it could not expand longitudinally, but would thicken, so that its length would not determine the

shrinkage afterwards. And I have been of the opinion for a very long while that there is something about the behavior of all substances, in passing from the liquid to the solid state, which is not fully understood, and so far as the shrinkage of metals is concerned it is a very important item, and I am very glad to see that to some extent that factor in the subject has obtained recognition.

Mr. Brashear.—It may be interesting, Mr. Chairman, to state that in my studies of the various forms of glass castings the molecular strain seems to be a function of the shape of the object itself. If you take a circular disk of any diameter or thickness, the cooling seems to produce a circumferential molecular strain. The result of this is that breakage is always diametral. I have had in my workshop disks 8, 10, even up to 20 inches, which were not perfectly annealed, and by a little shock in the workshop, or a slight blow upon the glass itself these disks burst into probably a thousand pieces, many of them in the shape of sectors of greater or less area.

I have no doubt that a proper study of castings in regard to their shape to relieve any direct or *angular* molecular strain may add a great deal to the strength of the casting. As I have already said, I wish we could look through a casting with a polariscope or some other instrument as we can through a piece of glass, and I hope in the near future to give the Association some notes on my studies of this interesting and perplexing problem.

The President.—I do not know about the manufacture of glass, but in iron they always radiate from the centre to the periphery, you know, whether it is a square or a round.

Mr. Henning.—I think it is due to Mr. Keep that I say a few words about his shrinkage yoke, because it is so generally misunderstood. The yoke consists of a bar with two carefully ground surfaces, and it is moulded in the sand, and the bar is moulded between the ends; that is, the sand is simply cut out. Now the metal is cast through a gate, of course, at the centre, and it rushes and strikes the chilled surfaces at the ends at once. That is the first thing that happens, and instantly, quicker than we can observe, the metal is chilled to a certain depth, depending upon the character of the iron. That is also uniform and constant. The very next instant, before this bar is solid—when it is still, in fact, so soft that it is quite liquid, except at the parts where a skin, which is less than one one-

hundredth of an inch thick, has been formed by the liquid coming in contact with the sand, the whole bar is liquid. The result of that chilling is the following: The material draws away from the yoke a measurable distance. We have found that out by certain means and methods which are very easily demonstrated by actual test, by putting in a little piece of sheet steel, and the moment after pouring the sheet steel is drawn out. It is free; it does not hold at all. Of course the sheet steel is oiled a little bit, just the same as these yokes are. The next effect will be that the sand becomes heated instantly, the bar expands, and having been cleared of the test piece growing constantly longer, of course it expands in the sand. It does not bear against the end of the test piece. Therefore, from the instant of pouring, the bar does not bear against the yoke any longer, and the yoke exerts no end pressure (demonstrated by actual experiments and investigation) against the bar. So that what Mr. West has said against the use of the yoke, and what Mr. Schumann has just said, is due to a misapprehension. The things do not happen as has been understood. In other words, it is asserted that the shrinkage of this whole bar is vitiated on account of the chilling of the end. Well, the chilling of the end never affects the small bars which are used as much as a quarter of an inch at each end; while the contraction of the whole bar, or the shrinkage, is directly dependent upon the length of the bar. That may be twelve inches or more. That is, half an inch out of twelve, or one-twenty-fourth of the total length of the bar. Therefore, if the total shrinkage of the bar is one-eighth of an inch, the contraction of the part of the bar, which will be vitiated, will be one-eighth times one-twenty-fourth, which, as you see, is a negligible quantity when we measure only to thousandths of an inch, because the total shrinkage is so small—one-eighth of an inch per foot. If we did, then, take that into account, the results would still be practically correct, for this reason: This bar is no longer against the chill, but that material has solidified the depth of the chill, and we know from investigation that that chilling does not continue after the first instant of contact of the bar. It does not make any difference how thick we make this bar or how thin, or whether we introduce other elements which might change the chill; we found the chill always the same, whether after cutting away the sand at once after pouring, or allowing the bars to cool in the sand.

shrinkage afterwards. And I have been of the opinion for a very long while that there is something about the behavior of all substances, in passing from the liquid to the solid state, which is not fully understood, and so far as the shrinkage of metals is concerned it is a very important item, and I am very glad to see that to some extent that factor in the subject has obtained recognition.

Mr. Brashear.—It may be interesting, Mr. Chairman, to state that in my studies of the various forms of glass castings the molecular strain seems to be a function of the shape of the object itself. If you take a circular disk of any diameter or thickness, the cooling seems to produce a circumferential molecular strain. The result of this is that breakage is always diametral. I have had in my workshop disks 8, 10, even up to 20 inches, which were not perfectly annealed, and by a little shock in the workshop, or a slight blow upon the glass itself these disks burst into probably a thousand pieces, many of them in the shape of sectors of greater or less area.

I have no doubt that a proper study of castings in regard to their shape to relieve any direct or *angular* molecular strain may add a great deal to the strength of the casting. As I have already said, I wish we could look through a casting with a polariscope or some other instrument as we can through a piece of glass, and I hope in the near future to give the Association some notes on my studies of this interesting and perplexing problem.

The President.—I do not know about the manufacture of glass, but in iron they always radiate from the centre to the periphery, you know, whether it is a square or a round.

Mr. Henning.—I think it is due to Mr. Keep that I say a few words about his shrinkage yoke, because it is so generally misunderstood. The yoke consists of a bar with two carefully ground surfaces, and it is moulded in the sand, and the bar is moulded between the ends; that is, the sand is simply cut out. Now the metal is cast through a gate, of course, at the centre, and it rushes and strikes the chilled surfaces at the ends at once. That is the first thing that happens, and instantly, quicker than we can observe, the metal is chilled to a certain depth, depending upon the character of the iron. That is also uniform and constant. The very next instant, before this bar is solid—when it is still, in fact, so soft that it is quite liquid, except at the parts where a skin, which is less than one one-

hundredth of an inch thick, has been formed by the liquid coming in contact with the sand, the whole bar is liquid. The result of that chilling is the following: The material draws away from the yoke a measurable distance. We have found that out by certain means and methods which are very easily demonstrated by actual test, by putting in a little piece of sheet steel, and the moment after pouring the sheet steel is drawn out. It is free; it does not hold at all. Of course the sheet steel is oiled a little bit, just the same as these yokes are. The next effect will be that the sand becomes heated instantly, the bar expands, and having been cleared of the test piece growing constantly longer, of course it expands in the sand. It does not bear against the end of the test piece. Therefore, from the instant of pouring, the bar does not bear against the yoke any longer, and the yoke exerts no end pressure (demonstrated by actual experiments and investigation) against the bar. So that what Mr. West has said against the use of the yoke, and what Mr. Schumann has just said, is due to a misapprehension. The things do not happen as has been understood. In other words, it is asserted that the shrinkage of this whole bar is vitiated on account of the chilling of the end. Well, the chilling of the end never affects the small bars which are used as much as a quarter of an inch at each end; while the contraction of the whole bar, or the shrinkage, is directly dependent upon the length of the bar. That may be twelve inches or more. That is, half an inch out of twelve, or one-twenty-fourth of the total length of the bar. Therefore, if the total shrinkage of the bar is one-eighth of an inch, the contraction of the part of the bar, which will be vitiated, will be one-eighth times one-twenty-fourth, which, as you see, is a negligible quantity when we measure only to thousandths of an inch, because the total shrinkage is so small—one-eighth of an inch per foot. If we did, then, take that into account, the results would still be practically correct, for this reason: This bar is no longer against the chill, but that material has solidified the depth of the chill, and we know from investigation that that chilling does not continue after the first instant of contact of the bar. It does not make any difference how thick we make this bar or how thin, or whether we introduce other elements which might change the chill; we found the chill always the same, whether after cutting away the sand at once after pouring, or allowing the bars to cool in the sand.

shrinkage afterwards. And I have been of the opinion for a very long while that there is something about the behavior of all substances, in passing from the liquid to the solid state, which is not fully understood, and so far as the shrinkage of metals is concerned it is a very important item, and I am very glad to see that to some extent that factor in the subject has obtained recognition.

Mr. Brashear.—It may be interesting, Mr. Chairman, to state that in my studies of the various forms of glass castings the molecular strain seems to be a function of the shape of the object itself. If you take a circular disk of any diameter or thickness, the cooling seems to produce a circumferential molecular strain. The result of this is that breakage is always diametral. I have had in my workshop disks 8, 10, even up to 20 inches, which were not perfectly annealed, and by a little shock in the workshop, or a slight blow upon the glass itself these disks burst into probably a thousand pieces, many of them in the shape of sectors of greater or less area.

I have no doubt that a proper study of castings in regard to their shape to relieve any direct or *angular* molecular strain may add a great deal to the strength of the casting. As I have already said, I wish we could look through a casting with a polariscope or some other instrument as we can through a piece of glass, and I hope in the near future to give the Association some notes on my studies of this interesting and perplexing problem.

The President.—I do not know about the manufacture of glass, but in iron they always radiate from the centre to the periphery, you know, whether it is a square or a round.

Mr. Henning.—I think it is due to Mr. Keep that I say a few words about his shrinkage yoke, because it is so generally misunderstood. The yoke consists of a bar with two carefully ground surfaces, and it is moulded in the sand, and the bar is moulded between the ends; that is, the sand is simply cut out. Now the metal is cast through a gate, of course, at the centre, and it rushes and strikes the chilled surfaces at the ends at once. That is the first thing that happens, and instantly, quicker than we can observe, the metal is chilled to a certain depth, depending upon the character of the iron. That is also uniform and constant. The very next instant, before this bar is solid—when it is still, in fact, so soft that it is quite liquid, except at the parts where a skin, which is less than one one-

hundredth of an inch thick, has been formed by the liquid coming in contact with the sand, the whole bar is liquid. The result of that chilling is the following: The material draws away from the yoke a measurable distance. We have found that out by certain means and methods which are very easily demonstrated by actual test, by putting in a little piece of sheet steel, and the moment after pouring the sheet steel is drawn out. It is free; it does not hold at all. Of course the sheet steel is oiled a little bit, just the same as these yokes are. The next effect will be that the sand becomes heated instantly, the bar expands, and having been cleared of the test piece growing constantly longer, of course it expands in the sand. It does not bear against the end of the test piece. Therefore, from the instant of pouring, the bar does not bear against the yoke any longer, and the yoke exerts no end pressure (demonstrated by actual experiments and investigation) against the bar. So that what Mr. West has said against the use of the yoke, and what Mr. Schumann has just said, is due to a misapprehension. The things do not happen as has been understood. In other words, it is asserted that the shrinkage of this whole bar is vitiated on account of the chilling of the end. Well, the chilling of the end never affects the small bars which are used as much as a quarter of an inch at each end; while the contraction of the whole bar, or the shrinkage, is directly dependent upon the length of the bar. That may be twelve inches or more. That is, half an inch out of twelve, or one-twenty-fourth of the total length of the bar. Therefore, if the total shrinkage of the bar is one-eighth of an inch, the contraction of the part of the bar, which will be vitiated, will be one-eighth times one-twenty-fourth, which, as you see, is a negligible quantity when we measure only to thousandths of an inch, because the total shrinkage is so small—one-eighth of an inch per foot. If we did, then, take that into account, the results would still be practically correct, for this reason: This bar is no longer against the chill, but that material has solidified the depth of the chill, and we know from investigation that that chilling does not continue after the first instant of contact of the bar. It does not make any difference how thick we make this bar or how thin, or whether we introduce other elements which might change the chill; we found the chill always the same, whether after cutting away the sand at once after pouring, or allowing the bars to cool in the sand.

Now the total error due to the chilling effect of the yoke is only the slight difference of contraction of the chilled quarter of an inch at the ends and any other quarter inch in the bar. We determined that the yoke did not vitiate the measurements of total shrinkage of the bars, as has been pointed out repeatedly because of a misapprehension of the action of the bar. Now this will all be demonstrated by the series of tests which are going to be made. We are going to have a bar free in the furnace, without the surrounding effect of chilling materials—sand or anything else—and will find the actual expansion and contraction when the bar is affected by nothing but heat; and in that case we will certainly know whether the contraction and expansion occur before or after the period of solidification—because we have determined that the great contraction occurs after solidification. It does not occur while the material is liquid at all. Once the material becomes solid it begins to expand very materially, and contracts after it reaches a much lower temperature, when the bars are already almost rigid—not rigid in the sense of a cold bar, but so rigid that you can take it out of the sand with a pair of tongs and it won't break. Just before that instant the bar will be solid, but will break all to pieces as soon as touched with anything, because there is no cohesion, although the material is no longer liquid. But we will try to find those things out later on.

Mr. Hawkins.—I would like to say in reference to the exhibit just made that it does not in any way set aside the objection that I raised to the yoke, because the removal of that little piece of steel would not be done until solidification had taken place at least at the ends. If they did remove it before solidification had taken place the metal would flow to the yoke and fill up the space, and the conditions would be just the same. So, of course, you remove it after solidification has taken place.

Mr. Henning.—No, sir.

Mr. Hawkins.—Well, then, it appears to me that this expansion which we know does take place somewhere at the point of solidification has forced the metal of the bar laterally—that is to say, thickened the bar where it would otherwise, if it had perfect freedom, have gone into lengthening it during the expansion. Now if you have obstructed that expansion with a yoke, no matter if you have removed that piece of steel and given it freedom during its contraction, you have still allowed that troublesome element which governs its shrinkage before that was removed by having that expansive action exerted upon the bar and exerted to thicken the bar, so long as it could not lengthen, which vitiates really what is the amount of longitudinal shrinkage after you get through.

With reference to the gentleman on my left who spoke about the circular stress in his castings of glass, I think that that is entirely due to the disk form of the casting; being in this form the strains would necessarily be in a circular direction. I think that a good many here will remember my calling attention, in discussing the other paper I mentioned, to some experiments made by a Mr. Jackson, now deceased, of the then Architectural Iron Works in Centre Street, New York; where he made some very careful experiments—in 1873, I think it was—to show the necessity of the uniform cooling of a casting in all its members. He designed a series of specimen pieces which were in various forms, but a typical one was a fly-wheel with a very large rim and extremely small straight arms. First he cast those in the ordinary way, uncovered the mould, just as is commonly done in foundries after the metal is poured and solidified, and in every case the arms drew away from the rim; that is, they broke either at the juncture of the hub and the arm, or the juncture of the rim and the arm. Then he took exactly the same pattern and moulded the same casting from it, but he also moulded with it, from separate patterns, large chunks of iron, following the outline of the straight arms and the rim; between each one of those arms was one of these pieces, leaving a thickness of sand between these chunks and its casting. Each piece of metal between the arms was a separate casting. All were poured together and not uncovered; this simply serving to retain the heat in the small members and make the whole to cool uniformly. As the result of those two experiments, were exhibited a whole lot of different forms of casting, where the slight members had become ruptured by shrinkage as ordinarily cast, whereas the self-same things cast with these intervening chunks of metal, and allowed to cool gradually and uniformly, were perfectly intact, and there were no signs of strain in them so far as could be determined. I merely mention this to show that the circular shrinkage was simply a function of the form of the piece; that lengthwise contraction does take place in such metal as arms of fly-wheels, and many other forms. One of the great things to be observed in cases of that kind is simply to have all parts become reduced in temperature at a uniform rate after the temperature of shrinkage is reached. No matter how fast or how slow it is, if it is all done alike there will be no interior residual strains in the casting.

Mr. Henning.—I would like to say that the very thing which Mr. Brashear has pointed out is one of the things which our committee have been trying for a year to arrive at. It has taken the manufacturers a year to study the structure of a furnace which will allow us to heat the bars. Mr. Uehling has promised to loan us one of his pyrometers, and Simonds, of Dayton, Ohio, are making an electric pyrometer of their construction to loan us at the same time. We propose to heat the bars gradually and uniformly up to a certain temperature and observe by autographic apparatus the behavior of the material, and then simply stop the heating and allow the furnace to cool down and get the inverse curves, and by that means we will find out the exact point of time and temperature at which crystallization and all other physical phenomena in connection with the heating and cooling of bars takes place. But if it takes us a year to try to get the apparatus, it will take us probably a little longer to make the experiments themselves ; but we hope to do that without being able to see through the material as can be done in glass.

*Mr. Francis Schumann.**—In my paper I speak of " average gray foundry irons." I venture to say that if all the foundries in the United States which make machinery castings made a test piece four feet long and one inch square, the contraction of such test pieces would be about an eighth of an inch to the foot.

I will speak first in relation to the word contraction as used in my paper. What word expresses the opposite of expansion ? What word the opposite of swelling? I think it perfectly proper to adopt the word "contraction" as the opposite of expansion, in preference to the word "shrinkage." In the foundry we say shrinkage—I use it myself; but in a formally prepared paper we must be more choice in our language and sufficiently precise to exactly express our meaning.

Another matter is the determination of the rate of contraction by the methods of Mr. Keep. I avail myself of this oppor-

---

* Author's closure, under the Rules.

tunity to place myself on record as being entirely opposed to it. Mr. Keep determines the contraction by casting the test bars between iron yokes. An element of error immediately creeps in which at once spoils the test pieces as proper gauges for determining the rate of contraction of a casting made in sand moulds. The effect of the yokes is to chill the ends—no matter how quickly they are removed—thus causing an increase in the contraction at the ends of the bars, which does not occur when the yokes are omitted. This is a source of error.

The proper method to determine the rate of contraction is to cast the test pieces of sufficient length so that any change can be readily measured, and errors from adhering sand or rapping of pattern become a minimum. For instance, in a casting say four feet long we can certainly attain a closer approximation to the rate of contraction than in one only one foot long, aside from errors by reason of sudden cooling at the ends from the yokes. I think the committee on tests should consider whether this element of sudden cooling caused by the yokes is not a source of error.

A further point by Mr. Keep is that I am wrong in my views regarding the effects when a light section is cast on to a heavier. Virtually, the gist of my paper and the result of twelve years of observation was the discovery *why* the lesser section contracted less, longitudinally, than the heavier. The older idea was that the light section would cool first and contract to a certain length, while the greater section would continue to contract to a greater extent—right in contradiction to the fact that the smaller part was supposed to contract more than the larger portion. How can we reconcile this contradiction otherwise than by considering voluminar contraction?

Bearing upon the remarks of Mr. Brashear as to the critical point in the cooling of castings, Mr. Wrightson and Mr. Markham, some years since, observed expansion after pouring the metal in the mould, occurring, possibly, immediately before or at the time of solidification.

We do not know if this re-expansion should be taken in the sense implied. This apparent re-expansion may be as follows: When the metal is poured in the mould the difference between the temperature of the sand of the mould and the molten iron is probably something like 2,000 degrees Fahr. The first change

will be the loss of heat of the surfaces coming in contact with the colder sand of the mould. The loss of temperature at this stage will be rapid, causing the outer film of the casting to solidify. Eventually the sand will attain a temperature nearly that of the casting. When this is reached the higher temperature of the internal portions of the casting, which are still in a fluid state, will assert itself to raise the temperature of the outer film, causing expansion, which will maintain until complete solidification of the casting has taken place; after which, with the loss of incandesence, contraction begins and continues until the casting is cold.

I have never observed this re-expansion in my practice, although I have tried to observe it by watching for its effects when making castings. Mr. Whitney, of Philadelphia, also agrees with Mr. Wrightson as to the existence of this second expansion.

My conclusions are, that to determine the deformation of a casting, test pieces of the particular mixture of the iron to be used in the casting must be made from which the rate of contraction is determined, to be used as a basis in the formula given. From the deformation so found, counter deformation in the pattern is provided to obtain a normal casting.

If we make the cross section of the arms of a fly-wheel so that its rate of cooling will be greater than that of the rim, the initial stresses to separate the arm may be such as to be a grave source of weakness. The cross section should be so designed and proportioned that its rate of cooling should be the same as that of the rim so as to insure the same rate of contraction.

The proper proportion of a casting is rather a matter for the engineer than the foundryman, and the strict observation of the laws of cooling must be considered as a most important factor in designing a machine or structure.

DCCXIX.*

ALUMINUM-BRONZE SEAMLESS TUBING.

BY LEONARD WALDO, BRIDGEPORT, CT.
(Member of the Society.)

I. THE NATURE OF ALUMINUM BRONZE.

It is important that correct ideas prevail as to the nature of this commercially new material. Diverse views have found expression, but among those having experience and observation of the metal, the opinion that aluminum bronze is a chemical combination of aluminum and copper, according to definite atomic proportions, is becoming fixed. It is a difficult question of metallurgical chemistry to determine the laws of this combination, since the valency of aluminum is in doubt, and it is apparently true that the aluminide or aluminides of copper formed by the union of copper and aluminum are freely soluble in molten copper. Whatever the atomic relations of the combination are, we have the following observed facts indicating a chemical combination between the copper and aluminum in aluminum bronze:

1. Under favoring conditions well-developed crystals, showing fixity of chemical composition and perfect regularity of form, are found in ingot metal.

I give in Figs. 161, 162, 163, 164 illustrations photographed from the beautiful specimens in Mr. E. S. Sperry's collection. Figs. 161 and 162 are well-marked octahedra; the others show more complicated forms.

2. Evidence of intense chemical action takes place on adding molten aluminum to molten copper. The evolution of heat causes the mass to rise to whiteness with free evolution of gases.

3. The molecular volume of the resultant mass is less than the theoretical volume. The specific gravity and electrical conductiv-

---

* Presented at the New York meeting (December, 1896) of the American Society of Mechanical Engineers, and forming part of Volume XVIII. of the *Transactions.*

will be the loss of heat of the surfaces coming in contact with the colder sand of the mould. The loss of temperature at this stage will be rapid, causing the outer film of the casting to solidify. Eventually the sand will attain a temperature nearly that of the casting. When this is reached the higher temperature of the internal portions of the casting, which are still in a fluid state, will assert itself to raise the temperature of the outer film, causing expansion, which will maintain until complete solidification of the casting has taken place; after which, with the loss of incandesence, contraction begins and continues until the casting is cold.

I have never observed this re-expansion in my practice, although I have tried to observe it by watching for its effects when making castings. Mr. Whitney, of Philadelphia, also agrees with Mr. Wrightson as to the existence of this second expansion.

My conclusions are, that to determine the deformation of a casting, test pieces of the particular mixture of the iron to be used in the casting must be made from which the rate of contraction is determined, to be used as a basis in the formula given. From the deformation so found, counter deformation in the pattern is provided to obtain a normal casting.

If we make the cross section of the arms of a fly-wheel so that its rate of cooling will be greater than that of the rim, the initial stresses to separate the arm may be such as to be a grave source of weakness. The cross section should be so designed and proportioned that its rate of cooling should be the same as that of the rim so as to insure the same rate of contraction.

The proper proportion of a casting is rather a matter for the engineer than the foundryman, and the strict observation of the laws of cooling must be considered as a most important factor in designing a machine or structure.

DCCXIX.*

ALUMINUM-BRONZE SEAMLESS TUBING.

BY LEONARD WALDO, BRIDGEPORT, CT.

(Member of the Society.)

I. THE NATURE OF ALUMINUM BRONZE.

It is important that correct ideas prevail as to the nature of this commercially new material. Diverse views have found expression, but among those having experience and observation of the metal, the opinion that aluminum bronze is a chemical combination of aluminum and copper, according to definite atomic proportions, is becoming fixed. It is a difficult question of metallurgical chemistry to determine the laws of this combination, since the valency of aluminum is in doubt, and it is apparently true that the aluminide or aluminides of copper formed by the union of copper and aluminum are freely soluble in molten copper. Whatever the atomic relations of the combination are, we have the following observed facts indicating a chemical combination between the copper and aluminum in aluminum bronze:

1. Under favoring conditions well-developed crystals, showing fixity of chemical composition and perfect regularity of form, are found in ingot metal.

I give in Figs. 161, 162, 163, 164 illustrations photographed from the beautiful specimens in Mr. E. S. Sperry's collection. Figs. 161 and 162 are well-marked octahedra; the others show more complicated forms.

2. Evidence of intense chemical action takes place on adding molten aluminum to molten copper. The evolution of heat causes the mass to rise to whiteness with free evolution of gases.

3. The molecular volume of the resultant mass is less than the theoretical volume. The specific gravity and electrical conductiv-

---

* Presented at the New York meeting (December, 1896) of the American Society of Mechanical Engineers, and forming part of Volume XVIII. of the *Transactions*.

will be the loss of heat of the surfaces coming in contact with the colder sand of the mould. The loss of temperature at this stage will be rapid, causing the outer film of the casting to solidify. Eventually the sand will attain a temperature nearly that of the casting. When this is reached the higher temperature of the internal portions of the casting, which are still in a fluid state, will assert itself to raise the temperature of the outer film, causing expansion, which will maintain until complete solidification of the casting has taken place; after which, with the loss of incandesence, contraction begins and continues until the casting is cold.

I have never observed this re-expansion in my practice, although I have tried to observe it by watching for its effects when making castings. Mr. Whitney, of Philadelphia, also agrees with Mr. Wrightson as to the existence of this second expansion.

My conclusions are, that to determine the deformation of a casting, test pieces of the particular mixture of the iron to be used in the casting must be made from which the rate of contraction is determined, to be used as a basis in the formula given. From the deformation so found, counter deformation in the pattern is provided to obtain a normal casting.

If we make the cross section of the arms of a fly-wheel so that its rate of cooling will be greater than that of the rim, the initial stresses to separate the arm may be such as to be a grave source of weakness. The cross section should be so designed and proportioned that its rate of cooling should be the same as that of the rim so as to insure the same rate of contraction.

The proper proportion of a casting is rather a matter for the engineer than the foundryman, and the strict observation of the laws of cooling must be considered as a most important factor in designing a machine or structure.

DCCXIX.*

ALUMINUM-BRONZE SEAMLESS TUBING.

BY LEONARD WALDO, BRIDGEPORT, CT.
(Member of the Society.)

I. THE NATURE OF ALUMINUM BRONZE.

It is important that correct ideas prevail as to the nature of this commercially new material. Diverse views have found expression, but among those having experience and observation of the metal, the opinion that aluminum bronze is a chemical combination of aluminum and copper, according to definite atomic proportions, is becoming fixed. It is a difficult question of metallurgical chemistry to determine the laws of this combination, since the valency of aluminum is in doubt, and it is apparently true that the aluminide or aluminides of copper formed by the union of copper and aluminum are freely soluble in molten copper. Whatever the atomic relations of the combination are, we have the following observed facts indicating a chemical combination between the copper and aluminum in aluminum bronze:

1. Under favoring conditions well-developed crystals, showing fixity of chemical composition and perfect regularity of form, are found in ingot metal.

I give in Figs. 161, 162, 163, 164 illustrations photographed from the beautiful specimens in Mr. E. S. Sperry's collection. Figs. 161 and 162 are well-marked octahedra; the others show more complicated forms.

2. Evidence of intense chemical action takes place on adding molten aluminum to molten copper. The evolution of heat causes the mass to rise to whiteness with free evolution of gases.

3. The molecular volume of the resultant mass is less than the theoretical volume. The specific gravity and electrical conductiv-

---

* Presented at the New York meeting (December, 1896) of the American Society of Mechanical Engineers, and forming part of Volume XVIII. of the *Transactions.*

ity are different from values based on the assumption that the aluminum and copper are merely mixed together.

4. The color of the compounds corresponding to the formulæ Cu_4Al and Cu_8Al closely approximate each other and a true gold color; while the color of Cu_6Al is distinctly greenish and resembles brass.

FIG. 161.—CRYSTALS OF ALUMINIDE OF COPPER. NATURAL SIZE.

5. The compound resists chemical action to which one of its components will sometimes yield.

6. In remelting the compound, both the copper and the aluminum give evidences of oxidization, although, if the aluminum existed in the free state, the aluminum only should oxidize, and the copper should be protected by the action of the aluminum.

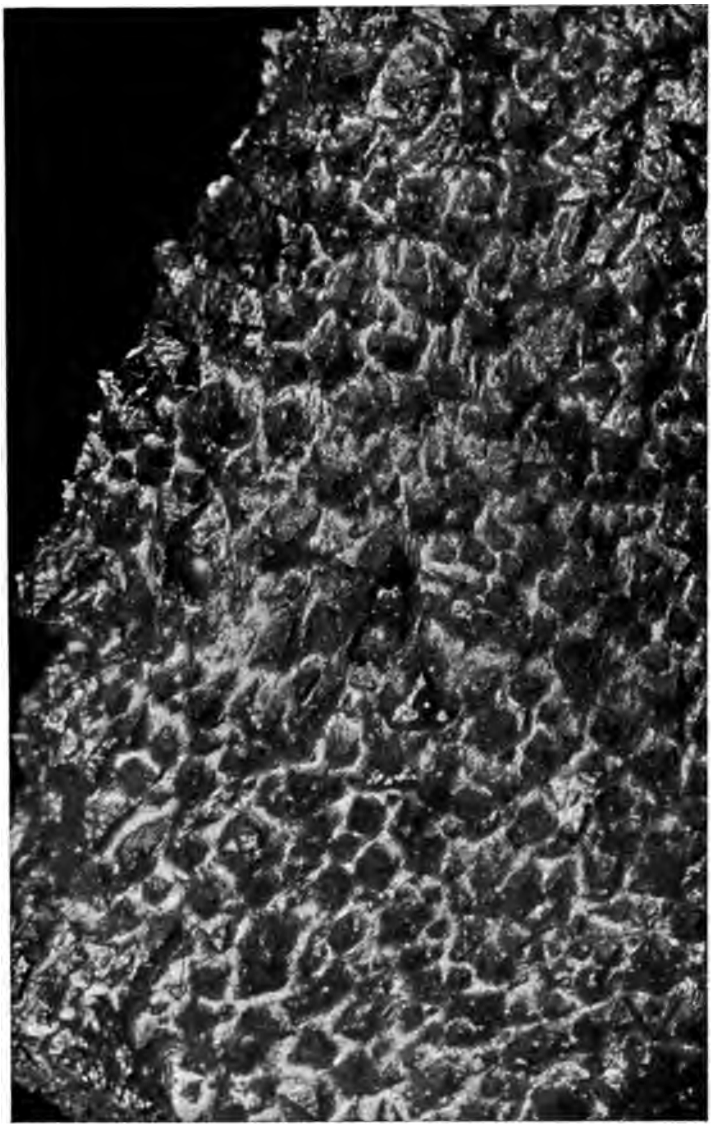

FIG. 162.—CRYSTALS OF ALUMINIDE OF COPPER. MAGNIFIED FIVE DIAMETERS.

7. When aluminum bronze is in a mass and the various parts are examined by chemical analysis and optically with the microscope, it is found that every part of the solid mass is identical in its chemical composition, and at no point is there any appearance of liquation or any free aluminum. In making this experiment it

is necessary that the bronze be so made as to insure a perfect fusion of its components in its preparation.

8. Unlike ordinary copper alloys, aluminum bronze preserves its identity up to its melting point. It does not become red-short, but it can be forged to a knife edge at a bright red heat, and at this temperature shows no tendency to "sweat" its aluminum or to otherwise change its chemical relations. The melting points of those compounds corresponding to Cu_4Al and Cu_8Al are nearly identical (1,030 degrees Cent. = 1,886 degrees Fahr., Le Verrier).

FIG. 163.—ALUMINIDE OF COPPER CRYSTALS. NATURAL SIZE.

This condition is illustrated by Fig. 173, which shows the two ends of an aluminum-bronze tube drawn apart at the temperature of 1,300 degrees Fahr. = 705 degrees Cent. Figs. 170 and 171 show the appearance of brass under the effect of a lower temperature.

9. There are no allotropic forms known of aluminum. It acts feebly as a base, but in many known cases plays the part of an acid radical, forming with other metals, such as iron, magnesium, etc., a series of aluminates. The equivalency of the aluminum here is in doubt. In the case of the compound Al_2Cl_6 and its class, aluminum is probably a tetrad. In the case of aluminum methide, $Al(CH_3)_3$, it seems to be a triad. The equivalency of copper is also in doubt. It is probably a dyad. It is believed to have the property in certain cases of becoming a negative acid radical, and at least four oxides are known. The chemistry of the copper, oxygen, and aluminum elements, not including the occluded gases which are set free at the melting temperatures, thus becomes highly complicated, and the exact reactions taking place must vary with varying crucible charges and furnace treatment. Most

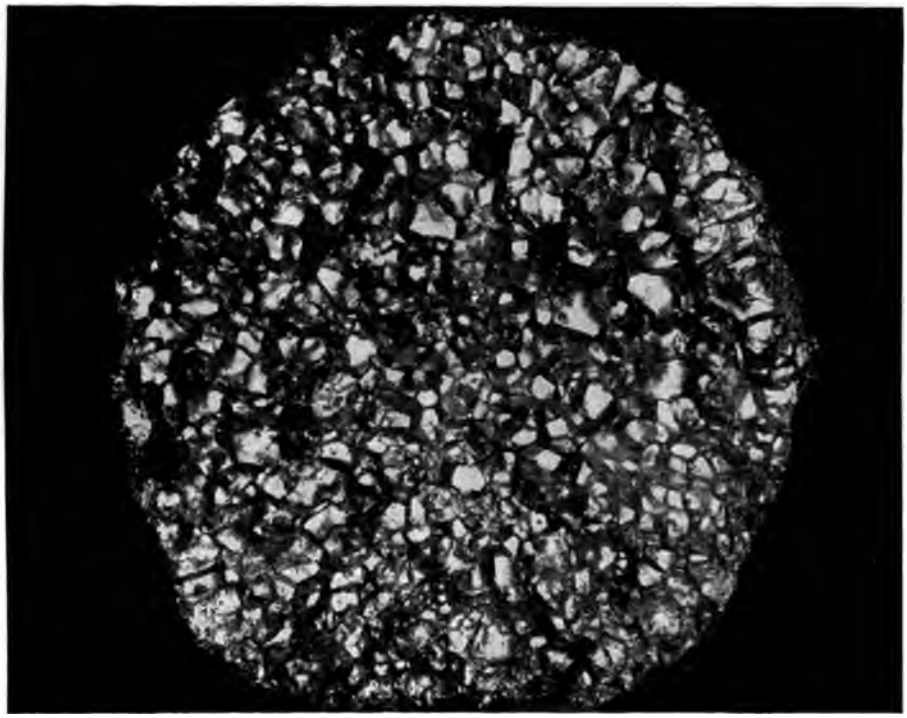

FIG. 164.—ALUMINIDE OF COPPER CRYSTALS. NATURAL SIZE.

probably there will be found to be a series of compounds of aluminum and copper, and these compounds may exist in such numbers that we may find for practical purposes that aluminum combines with copper in all atomic proportions. Debray (*Comptes Rendus*, 43, 925) points out that if Al_2O_3 and CuO are strongly heated with carbon, we get the result Cu_9Al. For convenience of reference, I give the more important percentages of aluminum which correspond to the formulæ opposite:

FIG. 165.—HYDRAULIC DRAW BENCHES, POPE TUBE CO.

Assuming the atomic weight of aluminum = 27.0 and of copper = 63.2.

FORMULA.	PER CENT. OF ALUMINUM.	FORMULA.	PER CENT. OF ALUMINUM.
Cu_2Al	17.6	$Cu_{10}Al$	4.10
Cu_3Al	12.44	$Cu_{12}Al$	3.44
Cu_4Al	9.65	$Cu_{14}Al$	2.96
Cu_5Al	7.88	$Cu_{16}Al$	2.61
Cu_6Al	6.65	$Cu_{18}Al$	2.32
Cu_8Al	5.07	$Cu_{32}Al$	1.32
Cu_9Al	4.54		

It is perhaps unnecessary to restate the above considerations, which have led the best authorities to the conclusion that the so-called alloys of copper and aluminum must be considered as radically different from the various metallic mixtures of copper, zinc, tin, nickel, manganese, and lead which have made the bulk of the copper alloys of commerce. There are, as is well enough known, certain chemical compounds among these last-mentioned alloys. These chemical compounds are useful as illustrating in kind, but not in degree, the affinity between copper and aluminum; since even in such definite compounds as $CuZn_2$ and $SnCu_3$ the affinity is weak, while in the aluminum bronzes or aluminides of copper there is no commercial method of separating the two constituents.

FIG. 166.—HYDRAULIC DRAW BENCHES (POPE TUBE CO.), FEED END.

The result of this chemical union is the strongest of the copper compounds or alloys. Wire is readily drawn from it with a tensile strength of 180,000 pounds per square inch. Indeed, it is within the range of possibility that, as the effects of small percentages of silicon and other agents are better known, cold-drawn aluminum bronze may be made which shall approach the highest attainment of special steels—at least in their untempered state.

But there are points in which aluminum bronze seems mechanically superior to any steel. It cannot, at present, be tempered; but it does not seem to show any change in the nature of crystallization under stress or shock. Thin soft ribbon may be indefinitely coiled and uncoiled or run over rollers. A bar may be struck indefinitely upon one end: I cite an instance where a rifle firing-pin was struck over 120,000 blows without apparently changing its molecular condition. It can be made of all degrees of hardness, and its strength and percentage of elongation varied from 40,000 to 100,000 pounds per square inch, and from seventy per cent. to one per cent. in ten-inch bars. As an illustration of this combination of strength with ductility, I cite the fact that aluminum-bronze cartridges made for the new small-calibre low-trajectory rifle were fired for more than ninety consecutive rounds, charged with smokeless powder, at the Frankford Arsenal, for a firing test. Added to these mechanical values

FIG. 167.—ANNEALING TUBES AT THE POPE TUBE WORKS.

are the chemical resistance to corrosive influences and the small electric potential of the combined aluminum and copper. The non-corrosiveness is only excelled by that of the noble metals; and the low, almost zero, electric potential of the aluminum bronze gives it a value in structural engineering which peculiarly fits it for acid industrial works or water-tube boilers and condensers. This value has already been tested on a large scale in underground tide-water retaining bolts in our seacoast batteries, and in sulphite pulp mills and the electrolytic vats of large copper refineries. As its cost is reduced by improved methods of working, it is finding its way into many uses where steel or iron has a short life from rust, inability to resist corrosion, or lack of density and strength.

FIG. 168.—ANNEALING FURNACES AT THE POPE TUBE WORKS.

II. THE PRODUCTION OF SEAMLESS TUBES.

It has long been evident that aluminum bronze was an ideal metal for drawn tubes; but serious difficulties presented themselves at every stage of production, from the ingot down. It was my belief that the Mannesmann or some kindred process presented the most feasible solution of getting the cylindrical ingot in a sufficiently economical way, and after the ingot was obtained that some plant capable of cold-drawing the higher grades of steel was necessary to produce the finished tube. Experiment had shown that aluminum bronze was not to be economically worked, or even worked at all with many grades, on draw benches originally planned for copper or brass. The hardness and high tensile strength combined were found to be destructive to the dies used in the best hydraulic benches for brass and copper. It remained, therefore, for the combination of the casting plant of the Waldo Foundry, under the direction of its superintendent, Mr. E. S. Sperry, to furnish the solid billet; for the newly introduced Mannesmann plant at the rolling-mills of Benedict & Burnham at Waterbury, under the superintendence of Mr. Chas. S. Morse, to convert the solid ingot into a cylindrical tube; and for the new

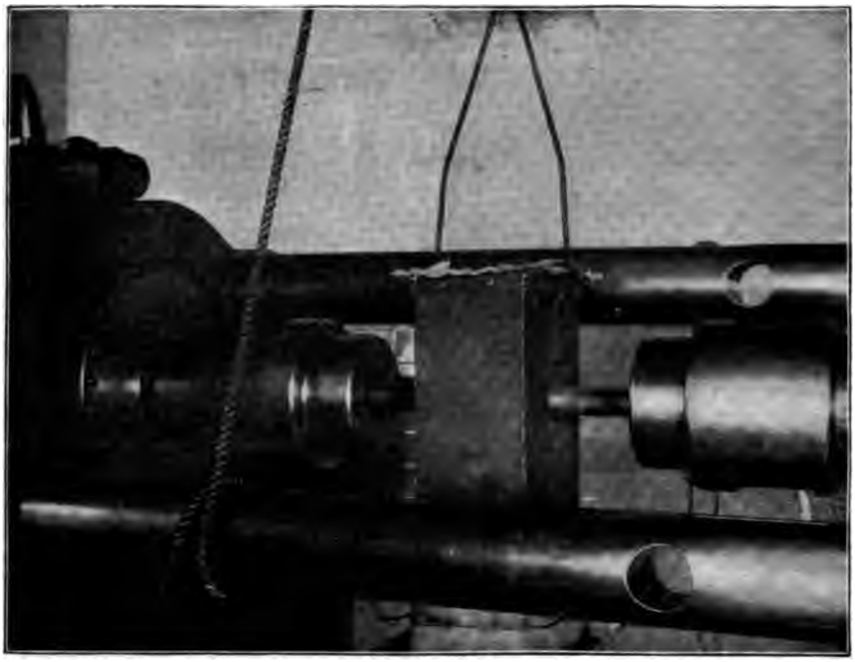

FIG. 169.—TESTING MACHINE AT THE POPE WORKS, ARRANGED WITH A SUSPENDED FURNACE TO TEST ALUMINUM-BRONZE TUBES AT HIGH TEMPERATURES.

FIG. 170.—GOVT. BRASS, "A." FIG. 171—ORDINARY BRASS, "C."

Pope Tube Works, built to cold-draw the nickel and other strong steels, under the superintendence of Mr. H. H. Eames, to convert the cylindrical tube billet of the Mannesmann process into the fin-

FIG. 172.—SWEDISH OPEN-HEARTH STEEL, "S."

FIG. 173.—ALUMINUM BRONZE, "P."

ished tube for the market. To these three gentlemen is due the success of the process of which I have here for your inspection various results.

The process of making a solid aluminum-bronze ingot has not yet been described. The system of solid hot tubular ingot-rolling known as the Mannesmann process is outlined in some detail at page 384 of the *Transactions* American Institute of Mining Engineers, vol. xix., for 1891. The Benedict & Burnham Company have introduced benefiting changes in the details of the process there described, and the Waterbury plant is a model of its kind. From one to two minutes is the time required to reduce a solid three-inch billet to a cylindrical forging ready for the draw bench.

After leaving the Mannesmann rolls the cylindrical aluminum-bronze ingots were given several passes on the draw benches at Benedict & Burnham's, to lessen their size to a point where they could be taken by the Pope Company's benches as at that time completed, the Pope Company's larger benches not yet being in place.

The new hydraulic cold-drawing plant of the Pope Tube Works is driven by two triple-expansion, single-acting Riedler pumping engines, rated at 500 horse-power each, but which can work up to 1,000 horse-power each. The arrangement is designed by E. D. Leavitt, and an idea of the total efficiency may be had from the fact that 1 horse-power is obtained for somewhat less than 12 pounds of steam with 135 pounds initial pressure. These engines work through two hydraulic accumulators having 16-inch rams, and working the 8 and 6-inch draw benches with a maximum pressure at the benches of 1,280 pounds per square inch.

The 78-inch fire-tube boilers are shown in Fig. 178. These boilers were used in a preliminary test of the aluminum-bronze tubes. The tubes of the dimensions shown in Table I. were inserted for twenty-four hours in the flame of the fire just as it enters the iron fire tubes of the boiler. There was no water or other cooling of the aluminum-bronze tubes during this period, and at the end of the time no change was observed in the aluminum-bronze tube, though it had been exposed to the full force of the furnace fire for twenty-four hours at the point the furnace fire enters the large boiler.

Figs. 165 and 166 show the two ends respectively when the hydraulic power is applied and when the tubular ingot is fed to the dies for reduction.

FIG. 174.—END VIEW OF FRACTURE, GOVT. BRASS, "A."

FIG. 175.—ORDINARY BRASS, "C."

FIG. 176.—SWEDISH O.-H. STEEL, "S."

FIG. 177.—ALUMINUM BRONZE, Cu_3Al, "P."

Figs. 167 and 168 show the methods adopted for annealing tubes, which consists in sealing them up in long cast-iron cylinders and then heating to a red heat in the furnace shown in Fig. 168.

Aluminum-bronze tubes require frequent annealing during the process of drawing, and this is especially true of the higher compounds, such as Cu_4Al, which are as difficult to draw as nickel steel.

It is known that up to the limit of commercial temperatures —say 400 to 500 degrees Fahr.—aluminum bronze retains its initial strength. In this respect it shows its great superiority to ordinary brasses and bronzes. It was not known what the behavior of aluminum-bronze would be at a cherry-red heat or any such temperature as might be reached by exposing empty boiler tubes, for instance, to forced-draft fires. To determine this interesting question, Mr. Souther, in charge of the testing department of the Pope Works, devised the arrangement shown in Fig. 169. The jaws of the Sellers-Emery testing machine are shown with an aluminum-bronze tube clamped between them. This tube passes through an asbestos-lined, Russia-iron-covered charcoal

FIG. 178.—78-INCH FIRE-TUBE BOILER, POPE TUBE WORKS.

furnace, conveniently hung by a pulley from the ceiling of the testing room. Passing through one end to the middle of the tube are the platinum and platino-iridium terminals of a Le Chatelier pyrometer, the indicating galvanometer for which is mounted in the cellar beneath. The standardization of this pyrometer is based upon the boiling points of water and naphthalene and the melting points of lead, aluminum, and copper.

Table I. gives the chemical analysis and the tests of the best brass tubes the market now affords, together with the tests of the same size tubes of open-hearth Swedish steel and a low aluminum bronze—about Cu_9Al, or a 4½ per cent. bronze.

I. Tests of Tubes at Ordinary Temperatures, Cold-drawn and not Annealed.

	A. Government Brass Tube.	C. Ordinary Brass Tube.	S. Swedish Open-hearth Steel.*	P. Aluminum Bronze, Cu_9Al.
Analysis at Pope Manufacturing Co.'s Testing Laboratory, Henry Souther, Engineer of Tests, Nov., 1896.	Per cent.	Per cent.	Per cent.	Per cent.
	Copper, 59.86	Copper, 67.58	Carbon, 0.420	Copper, 95.79
	Zinc, 39.82	Zinc, 31.67	Phosphorus, 0.031	Aluminum, 4.35
	Lead, 0.35	Lead, 0.85	Manganese, 0.500	Silicon, 0.05
	Tin, 0.013	Tin, 0.01	Sulphur, 0.031	
	....	....	Silicon, 0.110	
	....	....	Copper, 0.007	
Cold-drawn and not annealed :	Inches.	Inches.	Inches.	Inches.
Outside diam..	1.502	1.5000	1.504	1.491
Inside diam...	1.348	1.332	1.342	1.311
Area in sq. in.	0.38692	0.39584	0.3427	0.42157
Gauge length.	10.	10.	10.	10.
	Pounds.	Pounds.	Pounds.	Pounds.
Yield point....	Not defined.	63,100	64,200	68,700
Strength per sq. in.....	77,900	81,900	79,300	96,000
	Per cent.	Per cent.	Per cent.	Per cent.
Elongation in 10 in...	5.4	9.3	5.4	4.9

* For this test a similar tube of steel, but not cut from the same tube as in the hot tests below, was used. Carbon, 0.35 per cent.

Table II. shows the effect of heating the aluminum-bronze tube of Table I. to a bright red and then plunging it into water. The ultimate strength of 96,000 pounds per square inch and 4.9 per cent. elongation become changed to about one-half this strength, 47,600 pounds, and to thirteen times the per cent. elongation. This ratio of change is at its maximum in the low compounds and reaches a minimum in the high compounds at about Cu_4Al.

II. TESTS OF TUBES AT ORDINARY TEMPERATURES, COLD-DRAWN AND ANNEALED AT A RED HEAT.

	P. Aluminum Bronze, Cu$_9$Al.
Cold-drawn and annealed at a red heat:	
Outside diameter	1.625 inches.
Inside "	1.415 inches.
Area in square inches	0.508 square inch.
Gauge length	10 inches.
Yield point	24,200 pounds.
Strength per square inch	47,600 pounds.
Elongation in 10 inches	64.9 per cent.

Table III. gives the results of testing the four drawn tubes in the apparatus shown in Fig. 169. Figs. 170, 171, 172, and 173 show the tubes after breaking in the furnace. Figs. 174, 175, 176, and 177 show an end view of one-half of each tube. It will be noticed that while the brass tubes have each crumbled and disintegrated at the high temperature, the steel and the aluminum-bronze tubes show no such disintegration, but both draw out to a thin edge and then break. This is a most instructive experiment, as demonstrating the homogeneity of the aluminum bronze. Of course, at 1,400 degrees Fahr. the bronze is relatively much nearer its plastic and melting point, about 1,800 degrees Fahr., than is the steel which melts several hundred degrees higher. The temperature is an extreme in which no metal can be serviceable.

III. TESTS OF TUBES WHILE AT TEMPERATURES BETWEEN 1,300° FAHR. AND 1,400° FAHR.

	A. Government Brass Tube.	C. Ordinary Brass Tube.	S. Swedish Open-hearth Steel Tube	P. Aluminum-Bronze Tube, Cu$_9$Al.
Temperature to which heated	1,310° F.	1,350° F.	1,340° F.	1,410° F.
Length of time heated before test was made.	15 min.	15 min.	20 min.	20 min.
	Inches.	Inches.	Inches.	Inches.
Sectional area before heating	0.3866	0.3947	0.3819	0.4277
Length of specimen	23.49	24.18	24.10	24.02
Tubes broke at	less than 400 lbs.	less than 250 lbs.	less than 100 lbs.	700 lbs.
	Lbs.	Lbs.	Lbs.	Lbs.
Maximum strength of tubes at this temperature	1,250	250	4,100	1,950
	Inches.	Inches.	Inches.	Inches.
Elongation of consecutive inches in the furnace	0.04	0.02	0.03	0.03
	.10	.10	.14	.15
	.33	.45	.59*	1.33*
	.72*	.68*	.43	.38
	.20	.13	.12	.09
	.07	.04	.05	.02
Diameter at break	1.12	1.119	....	0.858

* Break occurs.

Table IV. gives the results of a repetition of the same tests at about 1,000 degrees Fahr. In these results we see the same excellent qualities of the aluminum bronze. It is still at a red heat, but the metal shows its serviceability by having nearly three times the strength of the best brass.

IV. Tests of Tubes while at Temperatures between 980° Fahr. and 1,010° Fahr.

	A. Government Brass Tube.	C. Ordinary Brass Tube.	S. Swedish Open-hearth Steel Tube	P. Aluminum-Bronze Tube, Cu,Al.
Temperature to which heated	975° F.	980° F.	1,010° F.	1,000° F.
Length of time heated before test was made.	20 min.	20 min.	20 min.	20 min.
	Sq. In.	Sq. In.	Sq. In.	Sq. In.
Sectional area before heating	0.3971	0.3867	0.3816	0.4221
	Inches.	Inches.	Inches.	Inches.
Length of specimens	23.96	24.16	24.04	24.00
Thickness	0.084	0.082	0.081	....
	Lbs.	Lbs.	Lbs.	Lbs.
Tubes broke at	Missed.	1,500	10,000	4,000
Maximum strength of tubes at this temperature	1,000	2,750	17.500	6,100
	Inches.	Inches.	Inches.	Inches.
Elongation of consecutive inches in the furnace	0.03	0.02	0.01	0.02
	.05	0.10	0.02	0.06
	.27	0.40	0.04	0.20
	.33*	0.36*	0.37*	0.33*
	.07	0.10	0.05	0.12
	.02	0.03	0.02	0.04

* Break occurs.

Collating the above results relating to an aluminum-bronze tube of an outside diameter of 1.5 inches and a thickness of .091 inch, we have the following data:

Treatment.	Ultimate Strength.	Per Cent. Elongation.
1. Broken cold	96,000 lbs. per sq. inch.	4.9
2. Heated to bright red, cooled, and then broken	47,600 lbs. per sq. inch.	64.9
3. Heated to 1,410° Fahr. and broken at that temperature	Knife-edge break, 700 lbs., 4,560 max.	133 in 1 inch.
4. Heated to 1,000° Fahr. and broken at that temperature	4,000 lbs., 6,100 max.	37 in 1 inch.

DCCXX.*

HISTORICAL AND TECHNICAL SKETCH OF THE ORIGIN OF THE BESSEMER PROCESS.

BY SIR HENRY BESSEMER, LONDON, ENGLAND.
(Honorary Member of the Society.)

Ever mindful of the great honor spontaneously conferred on me by the President and Council of the American Society of Mechanical Engineers in electing me an honorary member of that learned body, I have deemed it both a privilege and a duty on my part to lay before them a brief account of the early origin of the Bessemer process of steel manufacture, as developed at my bronze powder manufactory in London.

It is generally well known that this invention had its origin in certain experiments commenced in January, 1855, for the purpose of improving the quality of cast iron employed for founding heavy ordnance, by rendering the iron more tough, increasing its tensile strength, and making it less subject to injury by abrasion. I was aware that Fairbairn and others had sought to improve cast iron by the fusion of some malleable scrap iron along with the pig iron in the cupola furnace; this fusion of scrap iron, intermixed with the mass of coke, was found to convert the malleable iron into white cast-iron, which was at the same time much contaminated with sulphur, and thus, to a great extent, this method had failed in its object. In my experiments I avoided the difficulties inseparable from Fairbairn's plan, by employing a reverberatory furnace in which the pig iron was fused forming a bath; into this bath I put broken-up bars of blister steel, made from Swedish or other charcoal iron, its fusion taking place without being further carburized by contact with the solid fuel, or contaminated by the absorption of sulphur. The high temperature necessary for the fusion of a large proportion of steel in the bath, was attained by constructing the fire-

---

* Presented at the New York meeting (December, 1896) of the American Society of Mechanical Engineers, and forming part of Volume XVIII. of the *Transactions.*

grate much wider than the bath, by contracting the width of the furnace considerably at the bridge, and also by continuing to taper the furnace slightly all the way from the fire-bridge to the downcast flue, which was connected with a tall chimney shaft. My English patent for this arrangement bears date January 10, 1855. Many alterations and modifications of this furnace were made from time to time; it was found that the large volume of flame sweeping over the open hearth of the furnace was mixed with a considerable quantity of combustible gas, to consume which a hollow fire-bridge was employed, having numerous perforations made in the fire-clay lumps of which it was composed, and so arranged as to allow jets of hot atmospheric air to mingle with these combustible gases, which had the effect of producing an intense heat close down on the surface of the bath; it was also found that the admission of hot air all along the back of the fire-bridge produced a decarbonizing action on the bath; and hence the degree of carburation of the metal might be altered by regulating the admission of air. The flow of air through the hollow fire-bridge served also to moderate its temperature and render it more durable.

Some of the samples of metal which I produced by this process were, when annealed, of an extremely fine grain and of great strength. At this stage of my experiments I determined on casting a small model gun, which in the lathe gave shavings slightly curled, and closely resembling the turnings from a steel ingot. The metal when polished also looked white and close-grained like steel. I was so well pleased with this casting that I took it over to Paris, obtained an audience with, and showed it to, the Emperor, who had, in fact, encouraged me to make an attempt to improve iron employed in founding heavy ordnance. His Majesty, who had desired me to report progress, accepted this experimental gun, remarking that some day it might have an historical interest, and it was in recognition of this circumstance that his Majesty, later on, intimated to me, through Colonel Belleville, his desire to confer on me the Grand Cross of the Legion of Honor, provided I could obtain permission to wear it, a privilege which our ambassadors twice refused. His Majesty also gave me permission to erect my furnace at the government cannon foundry at Ruelle near Angoulême, to which place I went, with proper introductions, for the purpose of arranging all the necessary details. I also sent over from England several thousand special fire-bricks, etc., for the erection of the furnace.

But on resuming my further researches, after returning to London, an incident occurred which suddenly put a stop to the intended works at the Ruelle Gun Foundry, and, in fact, altered all my future plans and investigations.

The furnace as it was then arranged is shown in vertical section by Fig. 179, and in horizontal section on a line passing through openings in the perforated hollow fire-bridge by Fig. 180, where the narrowing of the body of the furnace is clearly shown, and the manner in which the jets of air were directed so as to produce an intense ignition of the combustible gases mingled with, and passing over, with the large volume of flame, from the over-charged fire-grate.

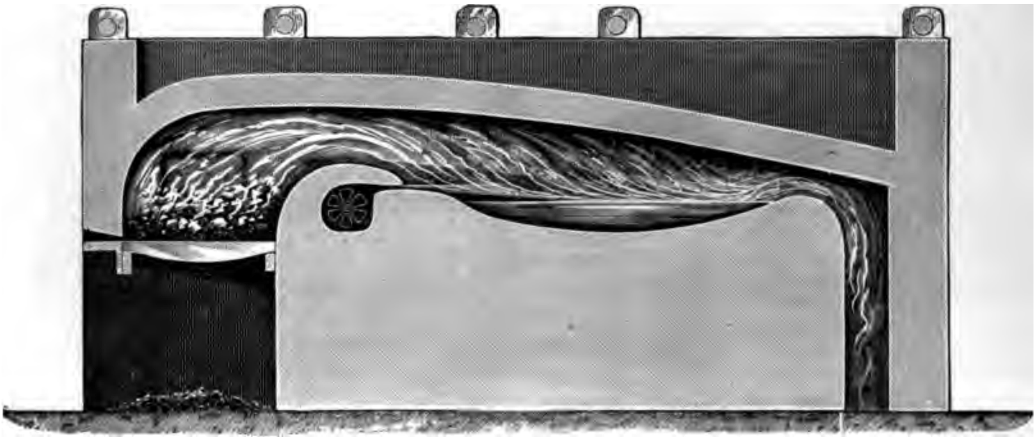

FIG. 179.

The small scale on which this experimental furnace was built (viz.: a capacity of three hundredweight only) was much against my obtaining the high temperature necessary to melt a large proportion of steel in the pig-iron bath. I was of course fully aware that a furnace of sufficient capacity to cast a five or a ten ton gun would produce a much higher temperature than it was possible to attain in my small furnace, and also that a forced draft, obtained by closing in the ash-pit and forcing air into it, would also still further increase the temperature. That this forced draft was in my mind at the time, is shown by the fact that I took out a patent for the manufacture of cast steel, dated October 17, 1855; that is, about two months after the casting of the model gun. In this patent I fully described the forcing of air, by a fan, into the closed ash-pits of furnaces employed in the manufacture of cast-steel; and it has often since occurred to me that, with the additional resources still untried, I did not act wisely in so suddenly abandoning these open-hearth experiments, in favor of an entirely different system, suggested to my mind by the incident before referred to. But with my impulsive nature and my intense desire to follow up every new problem which presented itself, I at once threw myself unreservedly into this new study, which seemed to open a way to the rapid production of bars, rails, and plates, of malleable metal direct from the blast furnace.

FIG. 181.

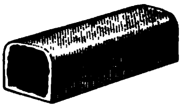

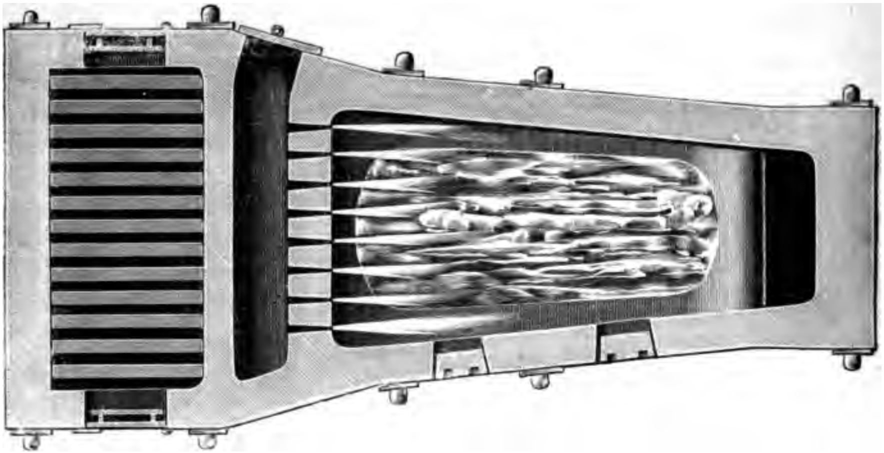

FIG. 180.

Before dismissing this subject it may be interesting, even at this distant period, to speculate on what would have been the natural outcome of the open-hearth-furnace experiments, had I not been so suddenly diverted from their further pursuit.

Such a furnace, with a forced draft and a capacity of ten tons, would undoubtedly have melted malleable iron or steel in a bath of pig iron, and have decarburized it to the desired extent, for I had, in fact, in this small furnace already fused steel in a bath of pig iron, on the open hearth of a reverberatory furnace, and as far back as January, 1855, I had claimed in my patent "*the fusion of steel in a bath of melted pig or cast iron in a reverberatory furnace, as herein described.*"

This was about ten years prior to the first patent taken out by M. Emile Martin, and now generally known as the Siemens-Martin process. This patent was obtained in England in the name of Emile Martin only, and is dated August 18, 1865, or more than ten years after my patent of January 10, 1855. M. Emile Martin, in his patent, says: "The manufacture is effected upon the principle of fusion of iron or natural steel in a bath of cast iron, maintained at a white heat, in a reverberatory furnace such as a Siemens gas-furnace."

I desire to say that I make no claim whatever to the prior invention of the Martin-Siemens process, nor do I for one moment assume that my patent of 1855 furnished any information which either of these gentlemen availed themselves of; but I think I am justified in saying that the fusion of steel in a bath of pig iron, on the open hearth of a reverberatory furnace, which I had patented and successfully effected, was, to use a favorite expression of Mr. Gladstone, "*approaching within measurable distance*" of that now well-known and successful process.

On my return from the Ruelle Gun Foundry, I resumed my experiments with the open-hearth furnace, when the remarkable incident I have twice referred to, occurred in this way: Some pieces of pig-iron in one side of the bath attracted my attention by remaining unmelted despite the great heat of the furnace, and I turned on a little more air through the fire-bridge, with the intention of increasing the combustion; on again opening the furnace door after an interval of half an hour, these two pieces of pig still remained unfused. I then took an iron bar, with the intention of pushing them into the bath, when I discovered that they were merely thin shells of decarburized iron, as represented at Fig. 181, thus showing that atmospheric air alone was capable of wholly decarburizing gray pig iron and converting it into malleable iron without puddling or any other manipulation. It was this which gave a new direction to my thoughts, and after due consideration I became convinced that if air could be brought in contact with a sufficiently extensive surface of molten crude iron the latter would rapidly be converted into malleable iron.

This, like all new problems, had a special interest for me, and I became impatient to test it by more than a laboratory experiment. Without loss of time I had some fire-clay crucibles made with perforated covers, and also some fire-clay blow-pipes, which I joined to a three-feet length of one-inch gas pipe, the opposite end of which was attached by a piece of rubber tubing to a fixed blast pipe. This elastic connection permitted the easy introduction and withdrawal of the blow-pipe into and out of the crucible, as shown at Fig. 182, which represents a vertical section of an air furnace, containing a crucible, which in this case represented the " converter." About ten pounds of molten gray pig iron about half filled the crucible, and thirty minutes' blowing was found to convert ten pounds of this gray pig iron into soft malleable iron. Here at least one great fact was elicited, viz.: the absolute decarburization of molten crude iron without any manipulation, *but not without fuel;* for had not a very high temperature been kept up in the air furnace all the time this quiet blowing for thirty minutes was going on, it would have resulted in the solidification of the metal in the crucible long before complete decarburation had been effected. Hence arose the all-important question: Can sufficient internal heat be produced by the introduction of atmospheric air to retain the fluidity of the metal until it is wholly decarburized in a vessel not externally heated?

This I determined to try without delay. I fitted up a larger blast cylinder in connection with a twenty horse power engine which I had daily at work, and I also erected an ordinary foundry cupola capable of melting half a ton of pig iron. Then came the question of the best form and size for the experimental "converter." I had very few data to guide me in this, as the crucible converter was hidden from view in the furnace during the blow. I, however, found that slag was produced during the blow and escaped through the holes in the lid; this fact guided me to the construction of a very simple form of cylindrical converter, about four feet in height in the interior, which was sufficiently tall and capacious, as I believed, to prevent anything but a few sparks and heated gases from escaping through a central hole made in the flat top of the vessel for that purpose, as shown in vertical section at Fig. 183. The converter had six horizontal tuyeres arranged around the lower part of it; these were connected by six adjustable branch pipes, deriving their supply of air from an annular rectangular chamber extending around the converter, as shown.

All being thus arranged, and a blast of ten or fifteen pounds pressure turned on, about seven hundredweight of molten pig iron was run into the hopper provided on one side of the converter for that purpose. All went on quietly for about ten minutes. Sparks, such as are commonly seen when tapping a cupola, accompanied by hot gases, ascended through the opening in the top of the converter, just as I supposed would be the case, but soon after a rapid change took place. In fact, the silicon had been quietly consumed, and the oxygen next uniting with the carbon, sent up an ever-increasing stream of sparks

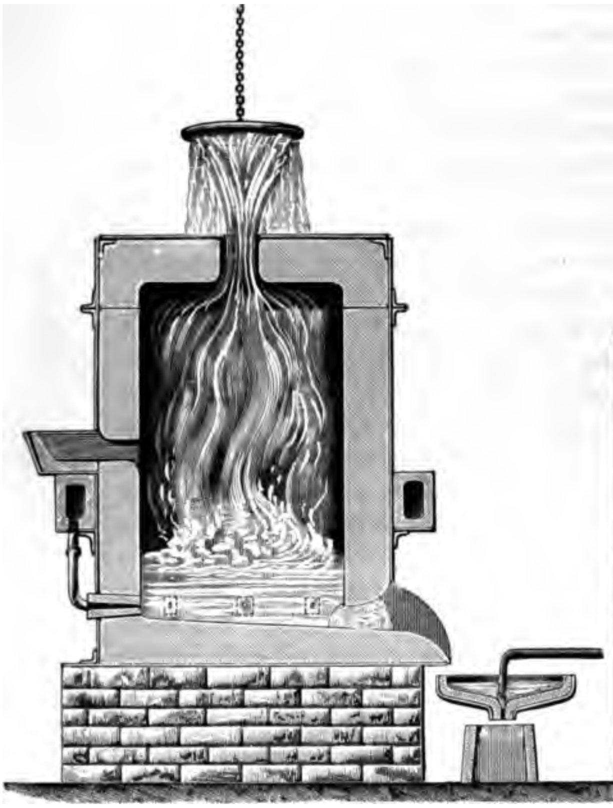
Fig. 183.

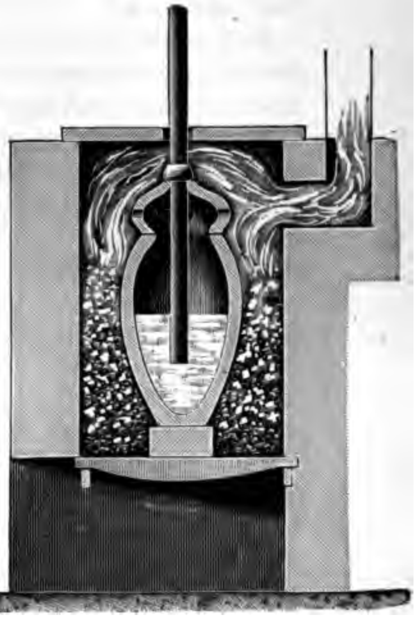
Fig. 182.

and a voluminous white flame; then followed a succession of mild explosions, throwing molten slags and splashes of metal high up into the air, the apparatus becoming a miniature volcano in a state of active eruption. No one could approach the converter to turn off the blast, and some low flat zinc-covered roofs close at hand were in danger of being set on fire by the shower of red-hot matter falling on them. All this was a veritable revelation to me, as I had in no way anticipated such violent results. However, in ten minutes more the eruption had ceased, the flame died down, the process was complete, and on tapping the converter into a shallow pan or ladle, and forming it into an ingot, it was found to be wholly decarburized malleable iron.

Such were the conditions under which the first charge of pig iron was converted into malleable iron in a vessel neither internally nor externally heated by fire.

I, however, desired to convert a second charge of pig iron, which had been put into the cupola, and in order to prevent this dangerous projection upward of sparks and molten slags, a temporary expedient was resorted to, which, however, failed in its object. I procured one of those circular chequered cast-iron plates so much used in the London pavements to allow coals to be put into the cellars below the pavement. This plate, which was about a foot in diameter, was suspended by a chain at a distance of eighteen inches above the central opening in the top of the converter, as shown in Fig. 183.

This as a mere temporary device was deemed sufficient to allow the conversion of another seven-hundredweight charge to be effected without any danger of setting fire to the premises. The converting operation went on quietly as before, but when the eruption commenced I saw the suspended plate get rapidly red-hot, and in a few minutes more it melted and fell away, leaving the chain dangling over the opening, and allowing the slags and splashes of metal to shoot upward as before. Thus it happened that the first converter which I had constructed was at once condemned as commercially impracticable, owing to this vertical eruption of cinder, and for this reason only. All attempts to lessen the violence of the process by a reduction of the number of tuyeres, or by lessening the diameter of the tuyere pipe orifices, or by diminishing the pressure of the blast, only resulted in a reduction of the necessary temperature, and in preventing the conversion of the molten pig iron into malleable iron. In one case the trial of a diminished area of tuyere opening resulted in nearly the whole charge of metal, after more than an hour's blowing, being converted into a solid mass of brittle white iron similar to ordinary refiners' plate metal. Indeed, I may say that the results of all my early investigations proved to me, beyond the possibility of doubt, a fact which has since been confirmed in every Bessemer steel works throughout Europe and America, viz., that rapidity of action ending in a violent eruption are absolutely necessary conditions of success; and when we take into consideration the fact that the converted metal must be made to acquire an enormously high temperature, so that it may not be chilled in tapping, or pouring it out of the incandescent converter into a cold open ladle; that it be not chilled by the addition of a large quantity of much cooler metal employed to deoxidize it; that it does not chill and form a skull in the casting ladle during the comparatively long time required to form it into ingots; it is obvious that to carry out the Bessemer process successfully, a temperature must be obtained very considerably above the mere melting temperature of malleable iron. In order to obtain this temperature it is necessary to drive powerful streams of air into the metal, so as to divide it into innumerable fiery globules diffused throughout the whole body of metal under operation, which for the time being may be likened to a fluid sponge, with the active combustion of carbon with oxygen going on in every one of its myriads of ever-changing cavities.

It has been found that the union of carbon and oxygen takes place so rapidly at this high temperature as to produce a series of mild explosions, which are scarcely noticed in the large converters in common use, which have a space for the violent expansions, of some eight or ten feet in height above the normal level of the metal; in this space the violent action expends itself unseen, and is only partially recognized by a small additional quantity of slags leaping out of the mouth of the converter.

With these facts before us it must be self-evident that all attempts to produce malleable iron in a plain cylindrical vessel which has no top to it, and in which the metal rises to within a few inches of its open mouth, must utterly fail from two causes. First, because heat would fly off so freely that the temperature of molten malleable iron could never be reached; and, second, because nearly all the metal contained in such a shallow open-topped vessel would leap out of it, and be scattered in all directions when the explosive eruption takes place, without which no charge of molten pig iron can be converted into fluid malleable iron. This violent eruption of slags, accompanied by an immense volume of flame which issues from the mouth of the converter, has surprised every one when witnessing the Bessemer process for the first time. Nor was I an exception to the rule, for I was as much astonished as others at this violent eruption, or most assuredly I should never have been so stupid as to design a converter so as to discharge a shower of slag vertically upwards, and thus insure its falling back on to and all around the converter. Till that time no one had ever seen a converter in operation, but no one who had once witnessed the conversion of fluid pig iron into malleable iron by a blast of air, would ever propose to construct a converter with an opening at the top so as to direct this fiery stream vertically upwards. Later experience allows me fearlessly to assert that a charge of molten crude iron cannot be converted into fluid malleable iron or steel by forcing air through it, without this violent eruption taking place. Hence it is to me utterly inconceivable that any man who had once witnessed the violent eruption invariably accompanying the converting process, should, after such an experience, design and patent a converting vessel with a sloping top and a vertical outlet so admirably adapted to throw upward and discharge so large a proportion of its contents as that shown in Fig. 184, which is an exact reproduction of an authorized drawing of the converter of an American patentee who, it has been asserted, had successfully carried on this converting process many years prior to his taking out this patent in 1857. The original patent is headed: "W. Kelly. No. 505. Reissued, Nov. 3, 1857."

I had no sooner condemned my first cylindrical converter than I commenced to remedy its defects. The most obvious and ready way of doing this would have been simply to make an opening near the top, on one side of it, and thus allow the escape of the ejected matter to take place horizontally, and direct the discharge against a wall, or allow it to fall into a pit, etc.; but I desired to prevent the discharge of metal splashes as far as possible, so that I determined on constructing the new converter with an upper chamber having an arched roof and a conical sloping floor. This converter is represented at Fig. 185 in vertical section, and at Fig. 186 in horizontal cross section, taken

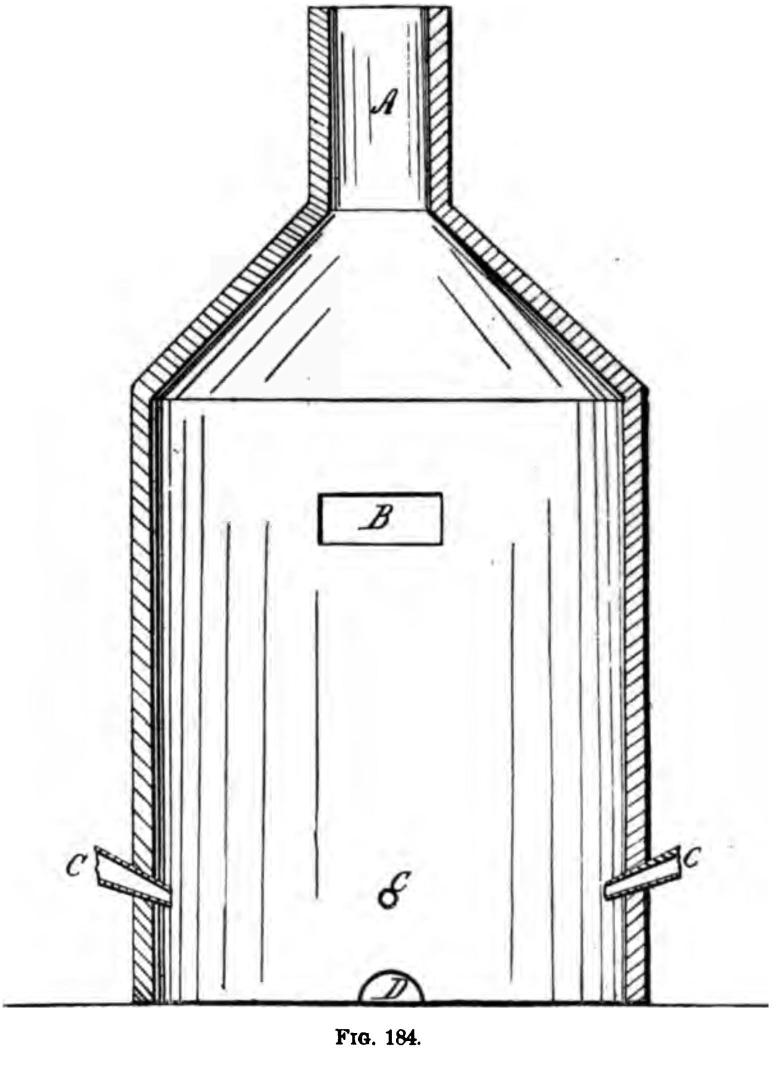

FIG. 184.

through the tuyeres. When a converter is so constructed the fluid matters which would otherwise pass vertically upward into the air are thrown against the arched roof, and any fluid metal which may be thrown up falls upon the sloping floor of the upper chamber, and again returns to the lower one, while the flame and a portion of the slags find their way out of the two square lateral openings provided for that purpose. This upper chamber serves also as a receptacle for heating up any metal intended to recarburize or alloy with the steel in course of being converted. The section Fig. 186 shows six well-burned fire-clay or plumbago tuyere pipes, fitted to openings left in the lining for that purpose. Their outer ends are made conical to faciliate the ramming in of loam around them, and which effectually holds them in position, and at the same time admits of their easy removal when worn out; a jointed piece of iron tube, with a catch to hold it in place, communicates the blast to each tuyere.

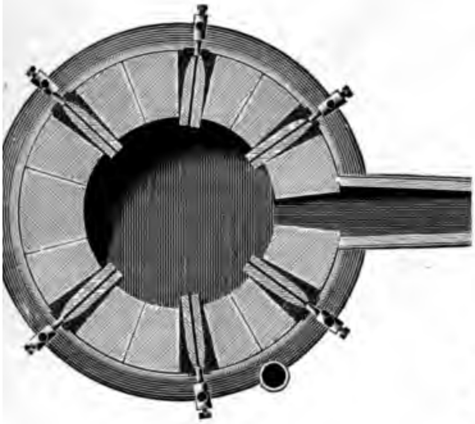

FIG. 186.

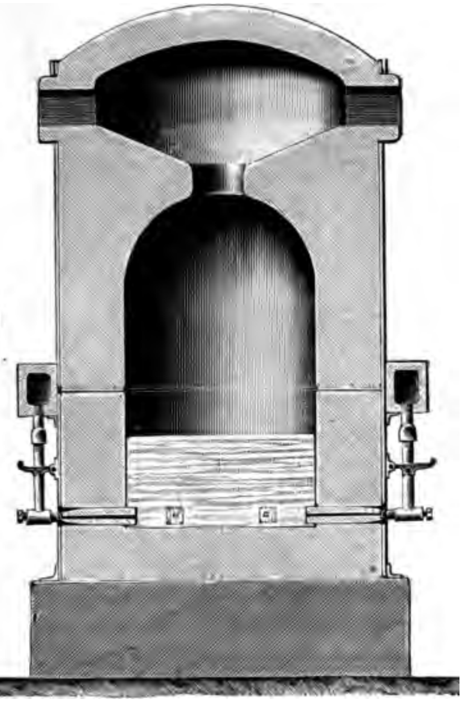

FIG. 185.

Another view of this converter, taken at right angles to Fig. 185, is represented in Fig. 187, showing in one side the hopper by which the molten iron is run in by a movable spout direct from the cupola. This view also shows the tapping hole open, and

was
way
ting
was
ıths
ıted
ten
two
to-
est-
ıper
ugh
hus
n or
ıcu-
bot-
ıuld
aste
was
ead
ıder
the
ıhes
ıose
sing
, no
ned
my

u
fl
sq
c
in
b
fi

lin
fac
ua
th
wi
tu

is
wh
the

the spout which conducts the converted metal into a movable shallow pan or receiver supported by a long handle (not shown). A fire-brick plug, attached to a long handle, is fitted to a fire-brick ring or opening in the bottom of the pan, and prevents any debris from the tapping hole being carried into the mould.

As this apparatus was intended to exhibit the process, it was essential that an easy way should be provided for getting away the ingots and quickly repeating the process. This casting apparatus, constructed precisely as represented in Fig. 187, was erected at my bronze manufactory in London about two months prior to my reading the "Cheltenham Paper." It is represented in vertical section in Fig. 187. The interior of the mould was ten inches square and about three feet in length, and was made in two pieces planed quite parallel and then permanently bolted together. The mould had a massive square lower flange resting on four dwarf columns, which stood on the square upper flange of an hydraulic cylinder. Massive bolts passed through these dwarf columns and through the square flanges, and thus united the ingot mould and hydraulic cylinder, in which a ram or plunger was placed, having a movable square head which accurately fitted the mould and formed a closely fitting movable bottom to it. Both the ram and the external surface of the mould were kept cool by a water jacket provided with supply and waste pipes. Matters being thus arranged, the converted metal was allowed to fall in a vertical stream from the receiver on to the head of the ram. The receiver was then removed, and water under pressure was turned on to the hydraulic cylinder as soon as the steel was solidified, when a beautifully square ingot, ten inches square and weighing about seven hundredweight, steadily rose and stood on end ready for removal, the head of the ram rising one or two inches above the top of the mould. There are, no doubt, many persons still living who witnessed this combined converting and casting apparatus in successful operation at my bronze works in London.

Two ten-inch square ingots made with this apparatus were sent to the Dowlais Iron Works in Wales, and, without hammering, were rolled into two flat-footed rails, on the 26th of August, 1856—that is, thirteen days after the reading of the "Cheltenham Paper." They were rolled under the personal superintendence of Mr. Edward Williams, past President of the Iron and

1855; that is, about two months after the casting of the model gun. In this patent I fully described the forcing of air, by a fan, into the closed ash-pits of furnaces employed in the manufacture of cast-steel; and it has often since occurred to me that, with the additional resources still untried, I did not act wisely in so suddenly abandoning these open-hearth experiments, in favor of an entirely different system, suggested to my mind by the incident before referred to. But with my impulsive nature and my intense desire to follow up every new problem which presented itself, I at once threw myself unreservedly into this new study, which seemed to open a way to the rapid production of bars, rails, and plates, of malleable metal direct from the blast furnace.

FIG. 181.

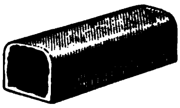

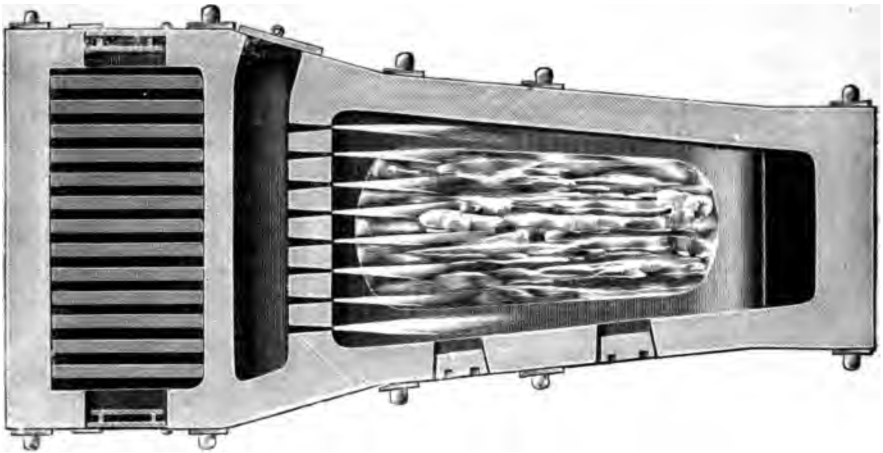

FIG. 180.

Before dismissing this subject it may be interesting, even at this distant period, to speculate on what would have been the natural outcome of the open-hearth-furnace experiments, had I not been so suddenly diverted from their further pursuit.

Such a furnace, with a forced draft and a capacity of ten tons, would undoubtedly have melted malleable iron or steel in a bath of pig iron, and have decarburized it to the desired extent, for I had, in fact, in this small furnace already fused steel in a bath of pig iron, on the open hearth of a reverberatory furnace, and as far back as January, 1855, I had claimed in my patent "*the fusion of steel in a bath of melted pig or cast iron in a reverberatory furnace, as herein described.*"

This was about ten years prior to the first patent taken out by M. Emile Martin, and now generally known as the Siemens-Martin process. This patent was obtained in England in the name of Emile Martin only, and is dated August 18, 1865, or more than ten years after my patent of January 10, 1855. M. Emile Martin, in his patent, says: "The manufacture is effected upon the principle of fusion of iron or natural steel in a bath of cast iron, maintained at a white heat, in a reverberatory furnace such as a Siemens gas-furnace."

I desire to say that I make no claim whatever to the prior invention of the Martin-Siemens process, nor do I for one moment assume that my patent of 1855 furnished any information which either of these gentlemen availed themselves of; but I think I am justified in saying that the fusion of steel in a bath of pig iron, on the open hearth of a reverberatory furnace, which I had patented and successfully effected, was, to use a favorite expression of Mr. Gladstone, "*approaching within measurable distance*" of that now well-known and successful process.

On my return from the Ruelle Gun Foundry, I resumed my experiments with the open-hearth furnace, when the remarkable incident I have twice referred to, occurred in this way: Some pieces of pig-iron in one side of the bath attracted my attention by remaining unmelted despite the great heat of the furnace, and I turned on a little more air through the fire-bridge, with the intention of increasing the combustion; on again opening the furnace door after an interval of half an hour, these two pieces of pig still remained unfused. I then took an iron bar, with the intention of pushing them into the bath, when I discovered that they were merely thin shells of decarburized iron, as represented at Fig. 181, thus showing that atmospheric air alone was capable of wholly decarburizing gray pig iron and converting it into malleable iron without puddling or any other manipulation. It was this which gave a new direction to my thoughts, and after due consideration I became convinced that if air could be brought in contact with a sufficiently extensive surface of molten crude iron the latter would rapidly be converted into malleable iron.

This, like all new problems, had a special interest for me, and I became impatient to test it by more than a laboratory experiment. Without loss of time I had some fire-clay crucibles made with perforated covers, and also some fire-clay blow-pipes, which I joined to a three-feet length of one-inch gas pipe, the opposite end of which was attached by a piece of rubber tubing to a fixed blast pipe. This elastic cônnection permitted the easy introduction and withdrawal of the blow-pipe into and out of the crucible, as shown at Fig. 182, which represents a vertical section of an air furnace, containing a crucible, which in this case represented the " converter." About ten pounds of molten gray pig iron about half filled the crucible, and thirty minutes' blowing was found to convert ten pounds of this gray pig iron into soft malleable iron. Here at least one great fact was elicited, viz.: the absolute decarburization of molten crude iron without any manipulation, *but not without fuel;* for had not a very high temperature been kept up in the air furnace all the time this quiet blowing for thirty minutes was going on, it would have resulted in the solidification of the metal in the crucible long before complete decarburation had been effected. Hence arose the all-important question: Can sufficient internal heat be produced by the introduction of atmospheric air to retain the fluidity of the metal until it is wholly decarburized in a vessel not externally heated?

This I determined to try without delay. I fitted up a larger blast cylinder in connection with a twenty horse power engine which I had daily at work, and I also erected an ordinary foundry cupola capable of melting half a ton of pig iron. Then came the question of the best form and size for the experimental "converter." I had very few data to guide me in this, as the crucible converter was hidden from view in the furnace during the blow. I, however, found that slag was produced during the blow and escaped through the holes in the lid; this fact guided me to the construction of a very simple form of cylindrical converter, about four feet in height in the interior, which was sufficiently tall and capacious, as I believed, to prevent anything but a few sparks and heated gases from escaping through a central hole made in the flat top of the vessel for that purpose, as shown in vertical section at Fig. 183. The converter had six horizontal tuyeres arranged around the lower part of it; these were connected by six adjustable branch pipes, deriving their supply of air from an annular rectangular chamber extending around the converter, as shown.

All being thus arranged, and a blast of ten or fifteen pounds pressure turned on, about seven hundredweight of molten pig iron was run into the hopper provided on one side of the converter for that purpose. All went on quietly for about ten minutes. Sparks, such as are commonly seen when tapping a cupola, accompanied by hot gases, ascended through the opening in the top of the converter, just as I supposed would be the case, but soon after a rapid change took place. In fact, the silicon had been quietly consumed, and the oxygen next uniting with the carbon, sent up an ever-increasing stream of sparks

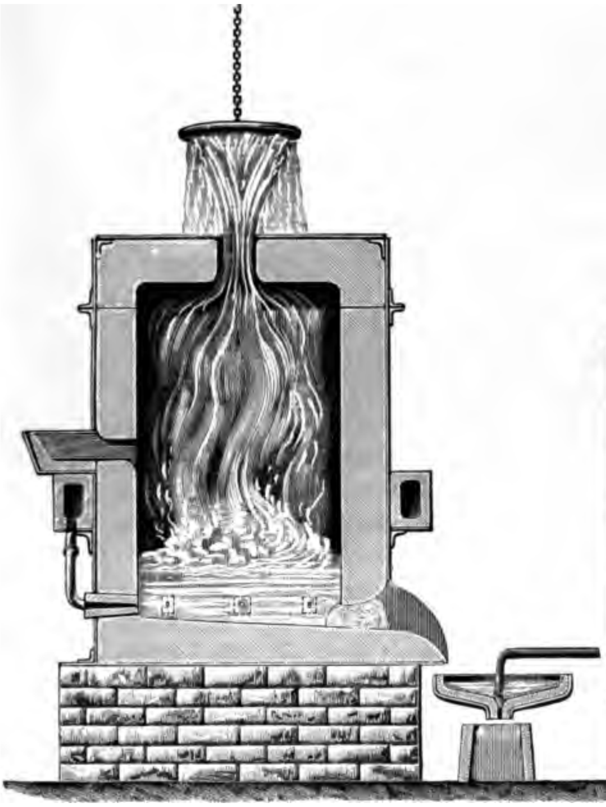

FIG. 183.

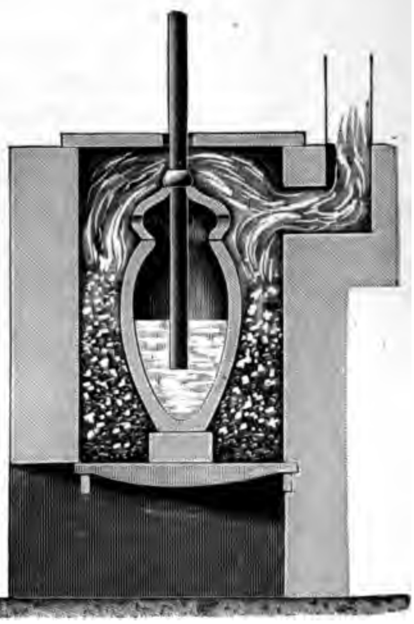

FIG. 182.

and a voluminous white flame; then followed a succession of mild explosions, throwing molten slags and splashes of metal high up into the air, the apparatus becoming a miniature volcano in a state of active eruption. No one could approach the converter to turn off the blast, and some low flat zinc-covered roofs close at hand were in danger of being set on fire by the shower of red-hot matter falling on them. All this was a veritable revelation to me, as I had in no way anticipated such violent results. However, in ten minutes more the eruption had ceased, the flame died down, the process was complete, and on tapping the converter into a shallow pan or ladle, and forming it into an ingot, it was found to be wholly decarburized malleable iron.

Such were the conditions under which the first charge of pig iron was converted into malleable iron in a vessel neither internally nor externally heated by fire.

I, however, desired to convert a second charge of pig iron, which had been put into the cupola, and in order to prevent this dangerous projection upward of sparks and molten slags, a temporary expedient was resorted to, which, however, failed in its object. I procured one of those circular chequered cast-iron plates so much used in the London pavements to allow coals to be put into the cellars below the pavement. This plate, which was about a foot in diameter, was suspended by a chain at a distance of eighteen inches above the central opening in the top of the converter, as shown in Fig. 183.

This as a mere temporary device was deemed sufficient to allow the conversion of another seven-hundredweight charge to be effected without any danger of setting fire to the premises. The converting operation went on quietly as before, but when the eruption commenced I saw the suspended plate get rapidly red-hot, and in a few minutes more it melted and fell away, leaving the chain dangling over the opening, and allowing the slags and splashes of metal to shoot upward as before. Thus it happened that the first converter which I had constructed was at once condemned as commercially impracticable, owing to this vertical eruption of cinder, and for this reason only. All attempts to lessen the violence of the process by a reduction of the number of tuyeres, or by lessening the diameter of the tuyere pipe orifices, or by diminishing the pressure of the blast, only resulted in a reduction of the necessary temperature, and in preventing the conversion of the molten pig iron into malleable iron. In one case the trial of a diminished area of tuyere opening resulted in nearly the whole charge of metal, after more than an hour's blowing, being converted into a solid mass of brittle white iron similar to ordinary refiners' plate metal. Indeed, I may say that the results of all my early investigations proved to me, beyond the possibility of doubt, a fact which has since been confirmed in every Bessemer steel works throughout Europe and America, viz., that rapidity of action ending in a violent eruption are absolutely necessary conditions of success; and when we take into consideration the fact that the converted metal must be made to acquire an enormously high temperature, so that it may not be chilled in tapping, or pouring it out of the incandescent converter into a cold open ladle; that it be not chilled by the addition of a large quantity of much cooler metal employed to deoxidize it; that it does not chill and form a skull in the casting ladle during the comparatively long time required to form it into ingots; it is obvious that to carry out the Bessemer process successfully, a temperature must be obtained very considerably above the mere melting temperature of malleable iron. In order to obtain this temperature it is necessary to drive powerful streams of air into the metal, so as to divide it into innumerable fiery globules diffused throughout the whole body of metal under operation, which for the time being may be likened to a fluid sponge, with the active combustion of carbon with oxygen going on in every one of its myriads of ever-changing cavities.

It has been found that the union of carbon and oxygen takes place so rapidly at this high temperature as to produce a series of mild explosions, which are scarcely noticed in the large converters in common use, which have a space for the violent expansions, of some eight or ten feet in height above the normal level of the metal; in this space the violent action expends itself unseen, and is only partially recognized by a small additional quantity of slags leaping out of the mouth of the converter.

With these facts before us it must be self-evident that all attempts to produce malleable iron in a plain cylindrical vessel which has no top to it, and in which the metal rises to within a few inches of its open mouth, must utterly fail from two causes. First, because heat would fly off so freely that the temperature of molten malleable iron could never be reached; and, second, because nearly all the metal contained in such a shallow open-topped vessel would leap out of it, and be scattered in all directions when the explosive eruption takes place, without which no charge of molten pig iron can be converted into fluid malleable iron. This violent eruption of slags, accompanied by an immense volume of flame which issues from the mouth of the converter, has surprised every one when witnessing the Bessemer process for the first time. Nor was I an exception to the rule, for I was as much astonished as others at this violent eruption, or most assuredly I should never have been so stupid as to design a converter so as to discharge a shower of slag vertically upwards, and thus insure its falling back on to and all around the converter. Till that time no one had ever seen a converter in operation, but no one who had once witnessed the conversion of fluid pig iron into malleable iron by a blast of air, would ever propose to construct a converter with an opening at the top so as to direct this fiery stream vertically upwards. Later experience allows me fearlessly to assert that a charge of molten crude iron cannot be converted into fluid malleable iron or steel by forcing air through it, without this violent eruption taking place. Hence it is to me utterly inconceivable that any man who had once witnessed the violent eruption invariably accompanying the converting process, should, after such an experience, design and patent a converting vessel with a sloping top and a vertical outlet so admirably adapted to throw upward and discharge so large a proportion of its contents as that shown in Fig. 184, which is an exact reproduction of an authorized drawing of the converter of an American patentee who, it has been asserted, had successfully carried on this converting process many years prior to his taking out this patent in 1857. The original patent is headed: "W. Kelly. No. 505. Reissued, Nov. 3, 1857."

I had no sooner condemned my first cylindrical converter than I commenced to remedy its defects. The most obvious and ready way of doing this would have been simply to make an opening near the top, on one side of it, and thus allow the escape of the ejected matter to take place horizontally, and direct the discharge against a wall, or allow it to fall into a pit, etc.; but I desired to prevent the discharge of metal splashes as far as possible, so that I determined on constructing the new converter with an upper chamber having an arched roof and a conical sloping floor. This converter is represented at Fig. 185 in vertical section, and at Fig. 186 in horizontal cross section, taken

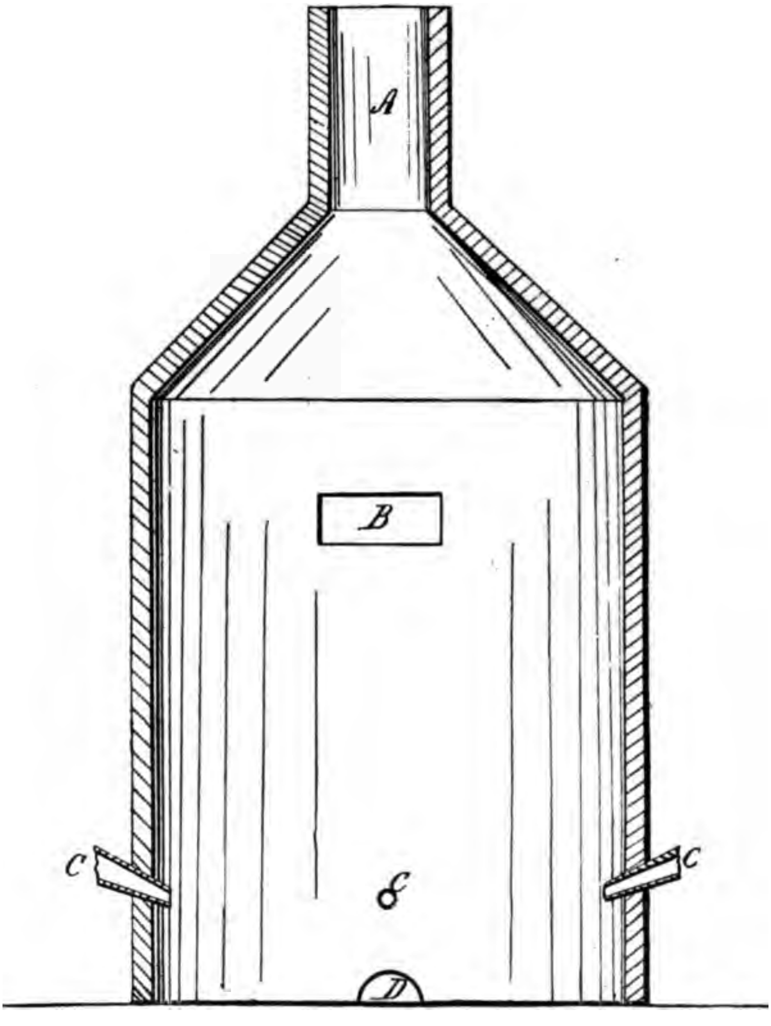

FIG. 184.

through the tuyeres. When a converter is so constructed the fluid matters which would otherwise pass vertically upward into the air are thrown against the arched roof, and any fluid metal which may be thrown up falls upon the sloping floor of the upper chamber, and again returns to the lower one, while the flame and a portion of the slags find their way out of the two square lateral openings provided for that purpose. This upper chamber serves also as a receptacle for heating up any metal intended to recarburize or alloy with the steel in course of being converted. The section Fig. 186 shows six well-burned fire-clay or plumbago tuyere pipes, fitted to openings left in the lining for that purpose. Their outer ends are made conical to faciliate the ramming in of loam around them, and which effectually holds them in position, and at the same time admits of their easy removal when worn out; a jointed piece of iron tube, with a catch to hold it in place, communicates the blast to each tuyere.

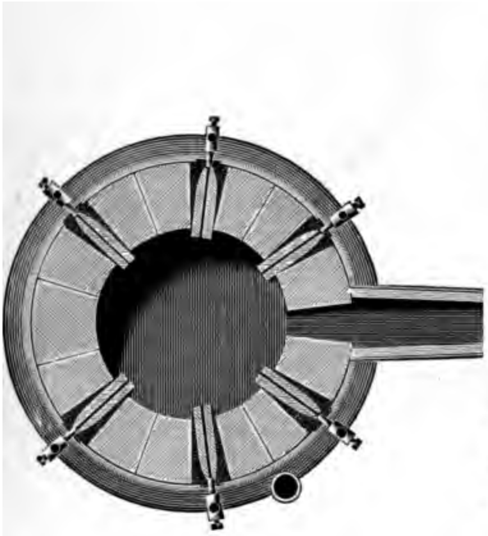

FIG. 186.

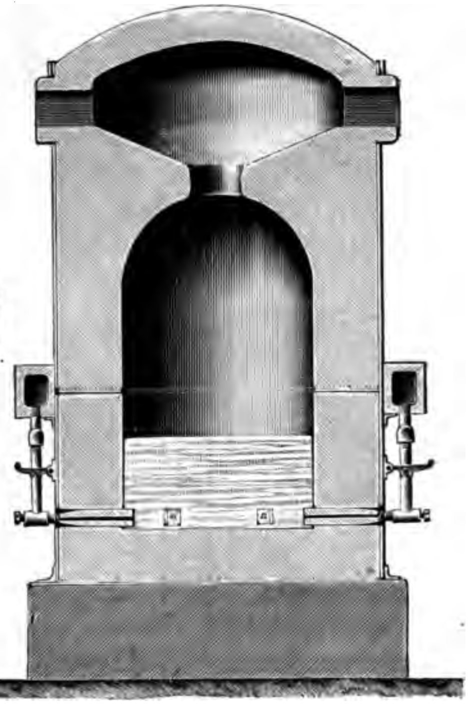

FIG. 185.

Another view of this converter, taken at right angles to Fig. 185, is represented in Fig. 187, showing in one side the hopper by which the molten iron is run in by a movable spout direct from the cupola. This view also shows the tapping hole open, and

movable
›t shown).
to a fire-
prevents
into the

›ss, it was
ting away
is casting
;. 187, was
ro months
›presented
ıld was ten
.ade in two
bolted to-
ange rest-
ıare upper
›d through
s, and thus
ch a ram or
/hich accu-
ovable bot-
the mould
y and waste
metal was
to the head
/ater under
soon as the
, ten inches
teadily rose
› ram rising
ıere are, no
.s combined
ation at my

aratus were
›ut hammer-
h of August,
ıe " Chelten-
superintend-
he Iron and

up
fla
sq
ch
in
be
fir

lin
fac
ual
the
wit
tuy
A
is
wh
the

the spout which conducts the converted metal into a movable shallow pan or receiver supported by a long handle (not shown). A fire-brick plug, attached to a long handle, is fitted to a fire-brick ring or opening in the bottom of the pan, and prevents any debris from the tapping hole being carried into the mould.

As this apparatus was intended to exhibit the process, it was essential that an easy way should be provided for getting away the ingots and quickly repeating the process. This casting apparatus, constructed precisely as represented in Fig. 187, was erected at my bronze manufactory in London about two months prior to my reading the "Cheltenham Paper." It is represented in vertical section in Fig. 187. The interior of the mould was ten inches square and about three feet in length, and was made in two pieces planed quite parallel and then permanently bolted together. The mould had a massive square lower flange resting on four dwarf columns, which stood on the square upper flange of an hydraulic cylinder. Massive bolts passed through these dwarf columns and through the square flanges, and thus united the ingot mould and hydraulic cylinder, in which a ram or plunger was placed, having a movable square head which accurately fitted the mould and formed a closely fitting movable bottom to it. Both the ram and the external surface of the mould were kept cool by a water jacket provided with supply and waste pipes. Matters being thus arranged, the converted metal was allowed to fall in a vertical stream from the receiver on to the head of the ram. The receiver was then removed, and water under pressure was turned on to the hydraulic cylinder as soon as the steel was solidified, when a beautifully square ingot, ten inches square and weighing about seven hundredweight, steadily rose and stood on end ready for removal, the head of the ram rising one or two inches above the top of the mould. There are, no doubt, many persons still living who witnessed this combined converting and casting apparatus in successful operation at my bronze works in London.

Two ten-inch square ingots made with this apparatus were sent to the Dowlais Iron Works in Wales, and, without hammering, were rolled into two flat-footed rails, on the 26th of August, 1856—that is, thirteen days after the reading of the "Cheltenham Paper." They were rolled under the personal superintendence of Mr. Edward Williams, past President of the Iron and

Steel Institute, where two pieces of these rails are still kept as examples of the early working of my process in London.

I may here call attention to the fact that in my patent, dated October the 17th, 1855, I described how the state of carburation of the converted metal might be regulated by the addition of molten pig iron after the blow had taken place; and as this patent was dated eleven months prior to Mr. Mushet's patent, claiming to recarburize the converted metal with the German pig iron known as spiegeleisen, Mr. Mushet could not prevent my use of that, or any other pig iron, to recarburize the converted metal after the blow. There was also another absolute bar to Mr. Mushet's claims to the exclusive use of manganese in my process besides its public use in all countries by cast-steel manufacturers, for in another patent of mine, dated May 31, 1856—that is, sixteen weeks prior to either of Mr. Mushet's three manganese patents—I gave the right to the public to alloy steel in my process with any metals previously used to alloy cast steel, by showing various ways in which these alloys might be made in my process, either by fluid or solid metals, or by metallic oxides. After this description I entered a disclaimer to their exclusive use, by means of which disclaimer and publication, all alloys of steel might be made in my converting process which had hitherto been made by other cast-steel manufacturers; so that the three patents of Mr. Mushet, embracing, as they did, every known means of employing manganese, and which were intended to corner me and control my patent, utterly broke down simply by having been anticipated in my two former patents. In consequence of this, Mr. Mushet did not think it worth while even to give me notice that in using spiegeleisen for recarburizing I was infringing his patents, nor did he make any attempt legally or otherwise to prevent me and all my English licensees from the free use of manganese; and I could never understand why American steel manufacturers paid a royalty for the use of these invalid patents.

In this same patent of May 31, 1856, I anticipated the invention of Sir Joseph Whitworth for casting steel under great pressure in order to render the ingots or castings more sound.

I stated that "I have observed that the cellular condition of cast steel, and more especially malleable-iron castings, is more or less owing to the spontaneous disengagement of gaseous matter in the interior of the fluid mass. Now, it is well known that substances capable of vaporizing, or of evolving gaseous matters, do so with greater difficulty if surrounded by a dense atmosphere. I therefore make use of this peculiar property of matter in order to increase the soundness of ingots or other articles formed by casting in fluid malleable iron or steel." Then follow details of apparatus both for casting under gaseous pressure and also by the direct action of an hydraulic plunger acting on the fluid steel during its solidification. I have no doubt whatever but that when Sir Joseph Whitworth applied for his patent for casting steel under the pressure of an hydraulic plunger, he was wholly unaware of what I had patented nine years previously, and it is only due to Sir Joseph to say that immediately on his patent agent pointing out this fact to him, he came to me and took a license under my patent, paying me a royalty on all the compressed steel made at his works up to the date at which my patent ceased to exist. That his special mechanical arrangements were an original invention I have never had any doubt whatever, and he had the additional merit of successfully carrying them out.

Before concluding this brief sketch of the more salient points connected with the many forms of apparatus designed by me to facilitate or improve my process, I must revert to the difficulties inseparable from a fixed converter, for in this form of apparatus much heat is dissipated by the necessity of blowing before running in the metal, and—what is still worse—the necessity of continuing the blast after the metal is converted and during the whole time of its discharge. Then there is the uncertainty as to the time employed in tapping, during which time the blowing must be continued, and there is also the difficulty of stopping the process, if anything goes wrong with the blast engine, or if a tuyere gives way.

These difficulties and many others caused me to search diligently for a remedy for these grave defects, which at that time appeared impossible to overcome, until the happy idea occurred to me of moving the converter on axes, so as to be able to keep the tuyeres above the metal until a charge of molten iron was run in, and which permitted the whole charge to be commenced at one and the same time, and admitted also of the cessation of blowing during its discharge. This movement of the converter also permitted a stoppage of the process to take place at any time for the removal of a worn-out tuyere if necessary, and afforded great facilities for working the process. The peculiar form of the movable converter was a matter of great importance, as there were several necessary requirements to provide for. First, in order to make the heavy lining secure when turned upside down, a more or less arched shape in all directions was necessary, and a long oval form seemed best adapted to the purpose, as it allowed some eight or nine feet in height for the metal to throw itself about in, without leaving the converter. Then the large mouth or outlet pointing to one side was necessary to direct the sparks to be all discharged in a direction away from the casting pit. After much study the precise form arrived at is shown at Fig. 188, which is an external elevation, and of which Fig. 189 is a vertical section, in the position in which the vessel is retained during the running in of the metal. Fig. 190 shows the position it occupies during the blow; Fig. 191 shows the position it assumes during the discharge of the converted metal into a loamed-up casting ladle provided with a discharge valve at the bottom; the ladle can be moved from mould to mould by closing the valve during such movement, and on opening it a vertical stream descends into the mould, perfectly free from any admixture of slags. The advantage of this mode of filling the moulds will be understood when it is borne in mind that the latter are necessarily narrow, upright iron vessels. Now, it is well known that a stream of molten metal, poured from the lip of a ladle, will describe a parabolic curve in its descent, and tends to strike the further side of the mould before reaching the bottom. The surface of the cast-iron mould so struck is instantly melted by the incandescent stream of steel, and the ingot and the mould thus become united, causing great inconvenience and destruction to the mould; nor is it easy in pouring the steel from a ladle to prevent some of the fluid slag floating on its surface from flowing over with the steel and spoiling the ingot. All of these difficulties are avoided by the valvular ladle discharging a vertical stream down the centre of the mould, the quantity and flow being regulated with great facility by the hand lever on the side of the ladle.

Many other mechanical contrivances were necessary to perfect the process; such, for instance, as a patent blast engine with noiseless self-acting valves; the hydraulic casting crane carrying the casting ladle over every mould in the semicircular casting pit, and capable of rising and falling to correspond to

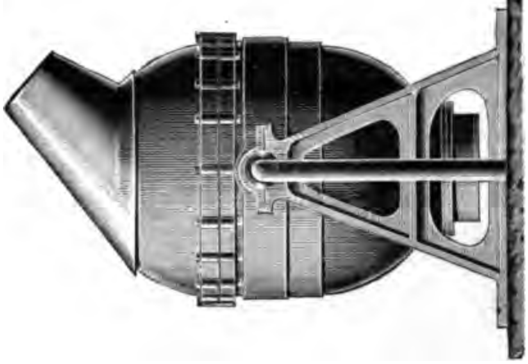

FIG. 188.

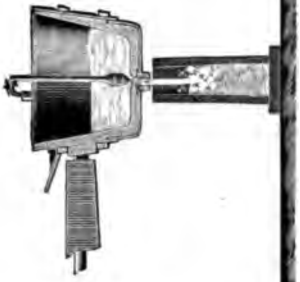

FIG. 192.

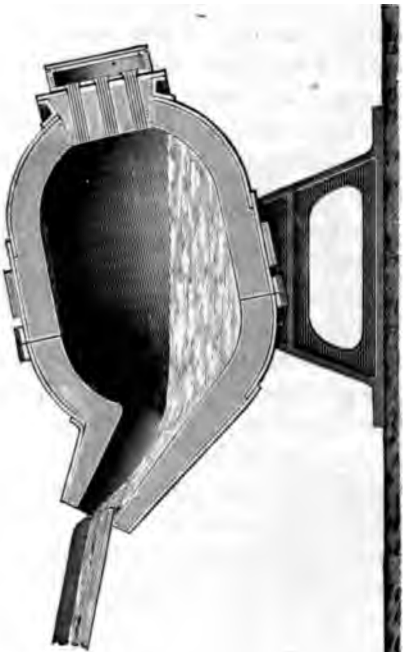

FIG. 189.

the descent of the mouth of the converter when filling the ladle for casting. Then there are the direct-acting ingot cranes which clear the pit and refill it with another set of moulds rapidly and with little manual labor; then we have the elevated "valve stand," called in America "the pulpit," from which safe position a single workman can overlook the whole converting apparatus, controlling all their movements, governing the blast, working the hydraulic cranes, etc.

The mode of transmitting semi-rotary motion to the converter was another important question which I had to solve. I was of opinion that ordinary shafting and straps were out of the question in dealing with this fiery monster; five or ten tons of fluid metal had to be lifted in one direction, the load diminishing until the fluid running to the opposite end of the converter tended to drive the lifting gear in the reverse direction, so that if anything went wrong or slipped, the converter might swing itself round and discharge these five or ten tons of incandescent steel on to the floor or among the work-people. This determined me to adopt the hydraulic apparatus now universally employed for governing the motions of the converter, for with this simple and reliable apparatus, a lad at safe distance can start it in motion or stop it instantly, can alter its speed of motion, and control the pouring out of ten tons of incandescent steel as easily as a lady pours out a cup of tea.

The first movable converter was erected at my steel works in Sheffield, and was moved by hand gearing, because at that early date I had not invented the hydraulic apparatus just described. This early converting apparatus did good work at Sheffield, and was constructed precisely as represented in Fig. 197, which shows also the first modification of the hydraulic casting crane, afterwards elaborated and rendered suitable for casting heavy charges of steel.

In conclusion, permit me to say that I have great pleasure in bringing before the many eminent engineers of which this Society is composed a brief sketch of the early days of this invention, and although many interesting details are necessarily omitted, I trust that I have said enough to show how the Bessemer process originated, and how, by constant study and practical research it was developed from a mere abstract theory, nearer and nearer to a degree of practical development at my bronze works in London, till I was justified in erecting the

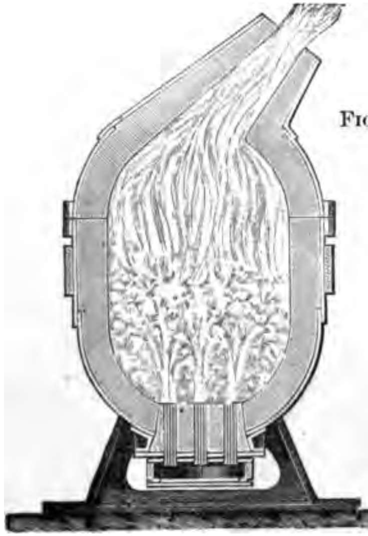

FIG. 190.

FIG. 194.

FIG. 195.

FIG. 196.

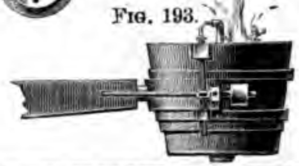

FIG. 193.

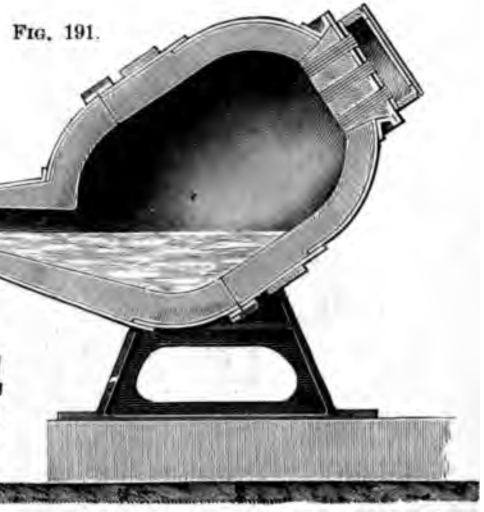

FIG. 191.

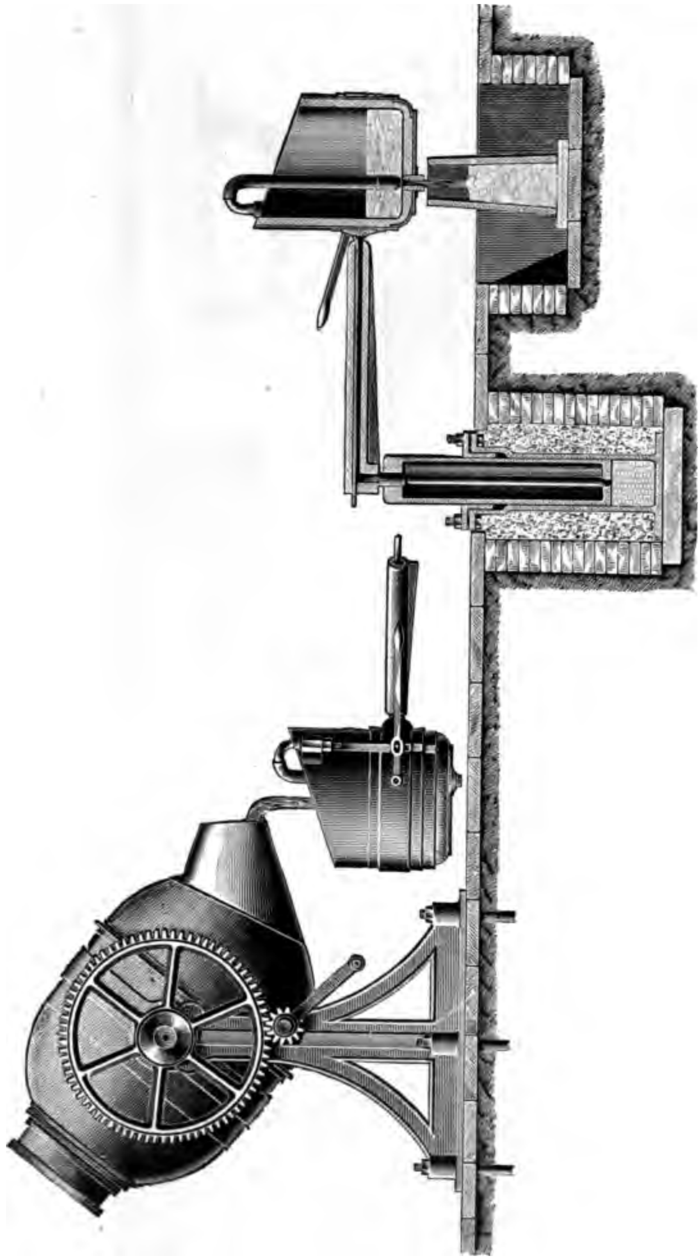

Fig. 197.

Bessemer Steel Works in Sheffield, which still remain in active operation under the style of Henry Bessemer & Co., Limited. These works were established for commercial purposes and also to serve as a pioneer works or school, where the process was for several years exhibited to any iron or steel manufacturers who desired to take a license to manufacture under my patents; during that time all who desired to do so were allowed to bring their own pig iron, and personally, or by their managers, see it converted prior to taking a license.

And now, when I contemplate the great steel trade of Europe and America, with an annual production of 10,000,000 tons of Bessemer steel, I may be pardoned if I express some pride and satisfaction when I find that, notwithstanding the keen competition of rival manufacturers and the ceaseless activity and inventive talents of mechanical engineers, my original invention has not been swept away, but still exists in active operation in every steel-making country in the world, intact in all its main features and in almost every detail as it left my hands forty years ago.

DISCUSSION.

Mr. W. F. Durfee.—[*Note by the Publication Committee:* Mr. Durfee discussed this paper at some length, but at his own request it was withdrawn from the permanent record of the volume of *Transactions.*]

FIG. 198.

Prof. F. R. Hutton.—Fig. 198 shows the elevation of an eighteen-ton converter used at the Maryland Steel Works at Sparrow's

Point, Md. Fig. 199 shows the installation of two such converters in the same works. It will be observed that these converters discharge vertically upwards, into chimneys placed directly over them.

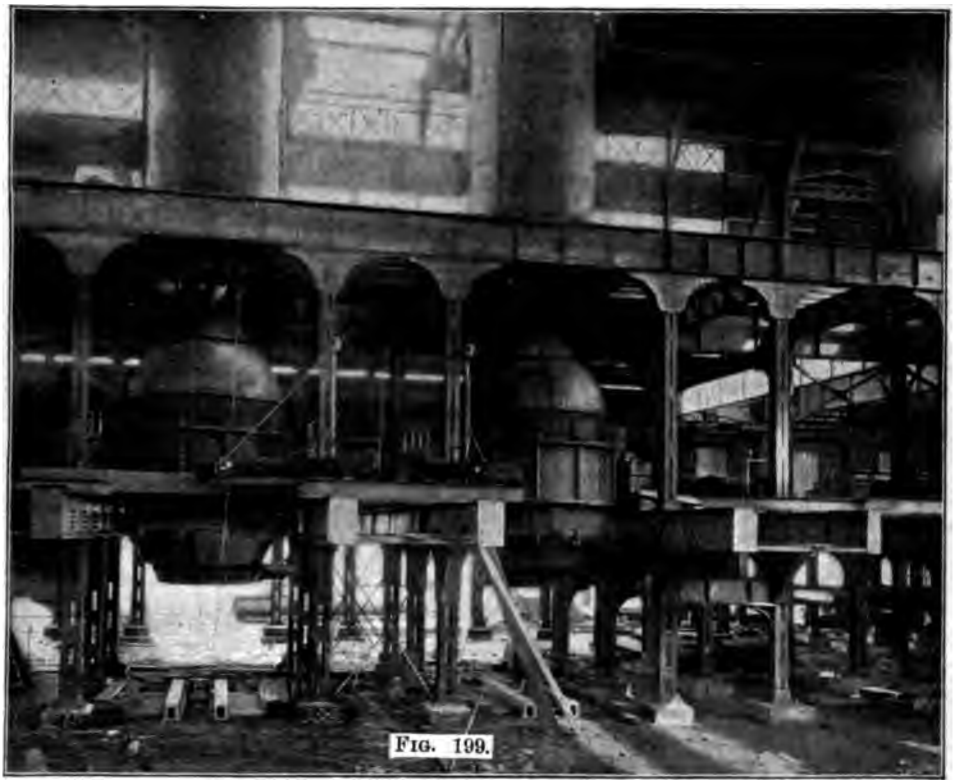

FIG. 199.

Mr. Robert Hunt.—I have not prepared any criticism of this paper, and, in fact, did not anticipate making any. I have, of course, read it and have listened to it with a great deal of interest, and to the remarks which have been made in its discussion. I honor Mr. Bessemer's genius, as every intelligent person must do who is acquainted at all with the history of the "process" and of the man.

Mr. Mushet did make an invention, whether he did or did not get a patent for it. Without this discovery of Mushet's the "Bessemer process" would never have been practical. The president knows, even more intimately than I, concerning the early experiments and efforts of Kelly. He was not a chemist and he labored under that great disadvantage. In fact chemistry at that time was not generally applied to any of the developments of the iron and steel business, and if Kelly had possessed a knowledge of metallurgical chemistry, even as it then existed, he would have undoubtedly have gone much further than he did. But we find that Mr. Bessemer himself was not any too sure of his chemistry, because in his original paper he states that the oxide of iron which was produced eliminated the sulphur from the bath. This was about as direct a chemical mistake, or as great a one, as a man could make. We know that sulphur is not eliminated, unfortunately, in the process. Again, in some of his early papers, he defined the maximum amount of phosphorus it was possible to use, as 0.02 per cent., so that he groped in the dark and took advantage of the developments as they progressed.

Mr. Durfee is quite right in protesting against the criticism upon a centre-nosed converter. We know that as the art progressed, in this country, at least, and here where the product has reached so high, that very form of converter stands among the many things which have helped us. I remember well the great slopping which took place with the old side-blowing vessel, and the skulls, as we called them, which formed in the converter stacks. My memory is keen of one sad instance at Troy where we lost some valuable lives. A number of men were hurt and the Bessemer superintendent, or foreman, had his back broken by the falling of the skull while they were at work at the bottom of the vessel repairing a tuyere ; so that the very thing which is condemned in the paper is one of the strongest features of the Bessemer apparatus as we have it in this country.

I have a great respect for Mr. Bessemer, and it is with great hesitancy that in his advanced age I would permit myself to say anything which would seem to take away an atom from his honor and glory, but I wish he were just a little more generous and a little more just.

Mr. William Kent.—The list of members of our Society contains no name more honored than that of Sir Henry Bessemer, and he deserves our thanks for having taken the pains to furnish our *Transactions* such a clear and interesting statement as this paper contains of his early labors in the development of the most wonderful process which bears his name. Our respect for the distinguished author of the paper, and our gratitude to him for having presented it to the Society, however, only enhances our regret that he has seen fit to include in it some statements which are open to criticism, and which are not really necessary to the elucidation of the subject matter of the paper, viz.: the account of his own work in developing the Bessemer process. If he had confined the paper to the one subject and had omitted the several references to Kelly, Mushet, Siemens and Martin, his paper would have been beyond criticism; but since he has brought in these names in such a way as to open up a matter of controversy, I think it only fair, in the interest of future students of history, to place upon record, along with the paper, the other side of these controverted questions, as it appears in certain historical documents from which I shall quote in what follows:

The first statement to which exception may be taken relates to Sir Henry's experiments on making open-hearth steel.

On page 459 it is stated: "As far back as January, 1855, I had claimed in my patent, 'the fusion of steel in a bath of melted pig or cast iron in a reverberatory furnace, as herein described.'" . . . "I think I am justified in saying that the fusion of steel in a bath of pig iron, on the open hearth of a reverberatory furnace, which I had patented and successfully effected, was, to use a favorite expression of Mr. Gladstone, 'approaching within measurable distance' of that now well-known and successful process."

The fact is, that the fusion of steel in a bath of cast iron on the bed of a reverberatory furnace had been practised in England and described long before 1855. In *Hasenfratz's Siderotechnie*, Paris, 1872, vol. iv., pages 93–99, there is described the process for manufacturing two varieties of steel in England, known as Marshall and Huntzmann steels. It is stated that "a mixture of gray and white iron is made. . . . Sometimes also there is mixed either with the gray cast iron alone, or with the mixture of these two cast irons, clippings of iron, old bar iron, scales and even clippings of steel. . . . The mixture described to make the second kind of steel is melted in ordinary reverberatory furnaces in which one has prepared a sort of crucible in the lowest position. . . . As soon as the cast iron begins to refine itself the principal workman introduces a

Mr. Allan Stirling.—Every member of this Society has reason to feel deeply gratified in having this paper contributed to the *Transactions*. Solid and enduring fame and lustre will always attach to the name of Bessemer in the annals of the race. The railways of the ante-Bessemer period had iron rails easily rent into stringy fibres like brooms, or squeezed in patches like dough, although the rolling stock was comparatively light. Such a roadbed could in no sense be called a "permanent way;" a ride, even for a short distance, was taken at great sacrifice to the nerves and injury to the health. The Bessemer steel rails of to-day retain their smoothness until worn out, notwithstanding that the rolling stock is very much heavier. Long journeys can be undertaken without fatigue; one can go to sleep in New York and wake up the next morning in Boston; even a journey across a continent can be made a rest and pleasure, and one can be in better condition on arriving at the destination than when starting.

But it is not in the passenger service alone or mainly that Mr. Bessemer has benefited his fellow-men. We are to-day witnessing a most marvellous effect of his process. Fast ships are hurrying from San Francisco to India to feed the many famine-stricken ones of that land, and the Atlantic Ocean is dotted with grain-laden vessels crossing to supply the deficiency in the European countries. The Bessemer process has made those things possible by enabling us to carry grain from the interior States to the seaboard so cheaply that it can be delivered in distant lands at reasonable prices. A famine in any portion of our land, or even in any portion of the world, is made highly improbable by reason of the fact that the Bessemer rail enables us to send large supplies of food from one district to another at a low cost.

The value of the work done by Mr. Bessemer cannot be overestimated. No one can read the famous Cheltenham paper without feeling that it is the product of a master mind. Its simplicity is the chief merit of the process. The principle of the invention stands out as a great fact, and Mr. Bessemer has proved himself to be a brilliant theorist, and, at the same time, a practical artisan, and few men have the privilege of seeing their inventions so completely used in such a short time.

The old processes produced laminated material mixed with intervening oxygenated scale, separating the iron into strings in the process of rolling. The great fact of the Bessemer process is that he produces without fuel a homogeneous material at a cost less than common iron; and without fuel he generates an intenser heat than had been produced before with fuel, and all this by a rapid operation without manual labor. Previous to Bessemer's time, in all methods of refining iron, blast was introduced above the surface of the metal and fuel was employed to maintain the necessary heat. Bessemer introduced the blast at the bottom of the metal and no fuel is necessary, and it was he that made the discovery that his method furnished enough heat to keep the metal fluid at the much higher temperature necessary in its purified condition.

Mr. Bessemer has contributed materially to lessen the severity of the sentence passed upon Adam that he should eat his bread in the sweat of his brow. Men's muscles have largely been freed from wasting drudgery, and used only in healthy exercise in an ever increasing percentage of the human race. The sweat of the brain within the brows is now in a largely increased number of cases the true reading of man's destiny. Before Bessemer's time it took five heats to make steel, and a great deal of hard, laborious work, and even the inferior iron of the time required three heats and the laborious drudgery of the puddler. Puddling was an enormous sacrifice of the human race. After being brought at great expense to 20, a puddler had only twenty years of working life, for at 40 the average puddler was done.

Without wishing unfairly to detract from any credit for a similar discovery due to Kelly, yet I submit that his work was still-born and would have been forgotten and of no benefit to mankind had he not been called into life by Bessemer. Mr. Bessemer deserves the credit because he had sufficient energy, enthusiasm, and perseverance, and sufficient capital. It was reserved to him to turn to enormous practical use a phenomenon known and practised by others destitute of the genius to turn it to account. Others approached so closely to him that it is difficult to understand how they failed to arrive at his result; but they failed and he succeeded, and that makes all the difference.

Bessemer deserves special credit because he lived in a country of prejudices and tradition where it was comparatively difficult to make progress. This, combined with the fact that the processes and apparatus then in use were an evolution and were at that time incapable of being explained, together with the difficulty and cost of experimenting, give him a place among the heroes of the ages—the leaders of mankind.

It is a source of great gratification to every right-thinking man that Mr. Bessemer obtained good patents and has reaped substantial pecuniary rewards for his genius. The iron-masters could not laugh at him. He had brains enough not only to invent but to reap for himself a considerable portion of the pecuniary results of his inventions. This shows a substantial advance in the position of the inventor since the time of Cort, whose invention of the puddling furnace and grooved rolls about one hundred years ago marked a great epoch in the iron trade. Cort died a poor man although the inventor of a process which conferred incalculable benefits on the race, and his descendants were, at the time of Bessemer's invention, receiving a pension of less than $100 a year. The brain of a man of genius is an element of great pecuniary value, and the fact that such men as Bessemer, Bell, Westinghouse, and Edison are wealthy, shows a distinct gain in the public morality as compared with the time of Cort. Thanks to the influence of a free press, an inventor has to-day a good chance to reap the reward of his inventions. Every nation and every person is interested in seeing that the inventor, who is our constant prop and stay, our watchman, vigilantly guarding us from falling into the condition of the Chinese, should have fair play and ample remuneration.

It is interesting to notice the fears that were expressed as to the results of the Bessemer process. It was thought that the output of coal would be reduced so much that the poor colliery proprietors would suffer, and a deficiency of air was feared on account of the large quantities used by the Bessemer process.

Kelly was awarded the American patent in preference to Bessemer, although he made his invention about seven years before applying for a patent. Our patent law has been amended, limiting the time to two years. The English patent practice goes back to the time of Queen Anne and calls loudly for amendment, as it has worked in many cases great hardship to inventors who are not residents of the realm.

In reference to Mushet's relation to the Bessemer process, it should be said that the idea conveyed by Bessemer's patents and experiments and by the famous Cheltenham paper, so far as I have been able to study them, was, that the blowing was to be arrested at various stages so as to produce various qualities of steel, and there was a certain amount of uncertainty about the results, failure and successes being about equally divided. The Cheltenham paper stated that part of the oxygen of the blast combined with the iron; and this oxide fuses at a high temperature and forms a powerful solvent of the earthy bases associated with the iron, thus washing and cleansing the metal from the earthy bases, the sulphur being driven off by the high temperatures. Mushet furnished the carbon for recarburizing and the manganese for fluxing at one heat, so that it seems to me the American steel manufacturers were quite right in recognizing Mushet's connection with the process and in paying him handsomely.

Bessemer's relation to the open-hearth process was very much like Kelly's to the Bessemer process. Probably Mr. Bessemer benefited himself and mankind generally by abandoning his open-hearth experiments and following up the converter system. Although he was measurably near to the open-hearth process, he did not follow it up and make it a commercial success, and it was reserved for others to put it into practical shape.

It is interesting to notice that at the time Bessemer's invention was made the soundings for the first Atlantic cable were being made, and that the Lake Superior ore had just been tested and found good, and it was suggested that this ore could be delivered in Europe at a low rate. The completion of the Atlantic cable, and the extensive use of Lake Superior ore, combined with the Bessemer process, have been potent factors in the development of this country during the last forty years.

at that time incapable of being explained, together with the difficulty and cost of experimenting, give him a place among the heroes of the ages—the leaders of mankind.

It is a source of great gratification to every right-thinking man that Mr. Bessemer obtained good patents and has reaped substantial pecuniary rewards for his genius. The iron-masters could not laugh at him. He had brains enough not only to invent but to reap for himself a considerable portion of the pecuniary results of his inventions. This shows a substantial advance in the position of the inventor since the time of Cort, whose invention of the puddling furnace and grooved rolls about one hundred years ago marked a great epoch in the iron trade. Cort died a poor man although the inventor of a process which conferred incalculable benefits on the race, and his descendants were, at the time of Bessemer's invention, receiving a pension of less than $100 a year. The brain of a man of genius is an element of great pecuniary value, and the fact that such men as Bessemer, Bell, Westinghouse, and Edison are wealthy, shows a distinct gain in the public morality as compared with the time of Cort. Thanks to the influence of a free press, an inventor has to-day a good chance to reap the reward of his inventions. Every nation and every person is interested in seeing that the inventor, who is our constant prop and stay, our watchman, vigilantly guarding us from falling into the condition of the Chinese, should have fair play and ample remuneration.

It is interesting to notice the fears that were expressed as to the results of the Bessemer process. It was thought that the output of coal would be reduced so much that the poor colliery proprietors would suffer, and a deficiency of air was feared on account of the large quantities used by the Bessemer process.

Kelly was awarded the American patent in preference to Bessemer, although he made his invention about seven years before applying for a patent. Our patent law has been amended, limiting the time to two years. The English patent practice goes back to the time of Queen Anne and calls loudly for amendment, as it has worked in many cases great hardship to inventors who are not residents of the realm.

In reference to Mushet's relation to the Bessemer process, it should be said that the idea conveyed by Bessemer's patents and experiments and by the famous Cheltenham paper, so far as I have been able to study them, was, that the blowing was to be arrested at various stages so as to produce various qualities of steel, and there was a certain amount of uncertainty about the results, failure and successes being about equally divided. The Cheltenham paper stated that part of the oxygen of the blast combined with the iron; and this oxide fuses at a high temperature and forms a powerful solvent of the earthy bases associated with the iron, thus washing and cleansing the metal from the earthy bases, the sulphur being driven off by the high temperatures. Mushet furnished the carbon for recarburizing and the manganese for fluxing at one heat, so that it seems to me the American steel manufacturers were quite right in recognizing Mushet's connection with the process and in paying him handsomely.

Bessemer's relation to the open-hearth process was very much like Kelly's to the Bessemer process. Probably Mr. Bessemer benefited himself and mankind generally by abandoning his open-hearth experiments and following up the converter system. Although he was measurably near to the open-hearth process, he did not follow it up and make it a commercial success, and it was reserved for others to put it into practical shape.

It is interesting to notice that at the time Bessemer's invention was made the soundings for the first Atlantic cable were being made, and that the Lake Superior ore had just been tested and found good, and it was suggested that this ore could be delivered in Europe at a low rate. The completion of the Atlantic cable, and the extensive use of Lake Superior ore, combined with the Bessemer process, have been potent factors in the development of this country during the last forty years.

DCCXXI.*

THE METRIC VERSUS THE DUODECIMAL SYSTEM.

A REVIEW OF THE FACTS.

BY GEORGE W. COLLES, BOSTON, MASS.
(Junior Member of the Society.)

"Now what I want is, facts."—THOMAS GRADGRIND.

DURING the recent session of Congress, in December of 1895, a bill was presented to the lower House, prescribing the introduction of the metric system of weights and measures, to take the place of our own, after a given date, by compulsory legal enactment. This bill was referred to the Committee on Coinage, Weights, and Measures, and as modified (or rather the substitute offered—essentially unchanged) by them, was recommended to the House for favorable action. No notice[1] was taken of the bill by the public press; and had it not been for a circular, with petition blank urging its passage, distributed by the American Metrological Society, it probably would never have come to my notice. Though inclined to look favorably on the metric system, it seemed to me that, if really good, it could not fail to spread in time of its own accord; that, in a matter of this sort, touching so closely upon the *rights* as well as upon the welfare of the people at large, compulsion should not be entered into without grave consideration; and that, consequently, the bill had not received the consideration due to its importance; for those who were most affected would never have known of its existence, except by its passage. A few months after this, there appeared in one of our magazines[2] an article by the eminent

---

* Presented at the New York meeting (December, 1896) of the American Society of Mechanical Engineers and forming part of Volume XVIII. of the *Transactions.*

[1] By *notice* I mean something more than a paragraph or two sandwiched in among congressional reports.

[2] *Popular Sci. Mo.*, June, 1896. This article had been originally published in the form of letters to the *London Times.*

English philosopher, Mr. Herbert Spencer, decrying the further spread of the metric system. I was the more surprised at this, as it had always been represented to me that no one whose opinion was worth having looked upon the metric system as anything other than a universal boon. I was so strongly impressed, however, by the weight of the considerations brought forward that I was led to a further investigation of the matter; and as this investigation extended to some length, and the change proposed was one of such momentous importance to the nation in general and the engineer in particular, and as, further, many or most of the members have probably never had time to look into the merits of the case themselves, but must take them for granted as presented to them by the advocates of the change, it has seemed that the results of this investigation, and the conclusions deduced from them, would be of value to the Society.

In the preparation of this paper it was at first intended to deal with the subject only in its engineering aspects; but it was soon seen to be of so much wider importance, to be so intricately connected with the welfare and progress of society in general, that justice could not be done to it by dividing it into its parts. The indulgence of the Society is therefore requested for the introduction of matters which, though they may not appear directly connected with engineering, yet have a distinct and important bearing on that profession. We should also bear in mind that the function of the engineer is not simply to construct and operate machinery, to build bridges and railroads, but to look far into the future, to weigh the political, social and economic sides of questions, in order properly to determine the popular wants which he is called upon to satisfy, and the best means of satisfying them.

With the metric or French decimal system most of us are familiar. Many of us became acquainted with it at school; and though we never use it in common life, and but rarely in engineering work, it is frequently brought to our notice by French and German literature, as well as by the persistent agitation of its friends. The other system under discussion, that which we use every day, though heterogeneous in the relation of its units, I have called duodecimal, from its distinguishing characteristic; its primary units, the pound and the foot, being originally thus divided, as expressed in the words ounce and inch (Lat. *uncia*; one twelfth); at the same time including under that title any general scheme for bringing the latter into more perfect harmony with the duodecimal principle. It will be seen, however, that the system might with equal propriety be called octonary.

These two schemes for weighing and measuring are fundamentally different. They originated under totally different circumstances and from wholly unrelated causes. They are to each other and to humanity as the earthquake and the flow of water are to the form of the earth's crust, and have had about the same respective influence. The metrical decimal system was made to order in a space of about ten years, or rather of about that many months. The duodecimal system is a natural product—the product of centuries—has *grown up* with the necessity of weighing and measuring, and from a period antedating written history. It is true that the other may be termed natural in one sense, but in one sense only. The makers of the metric system took for their base of relation for the different units the base of the generally accepted arithmetical notation, *i.e.*, the number ten, whose use as such is no doubt even more ancient than the use of the number twelve for the division of matter.

The original choice of the number ten is unquestionably due to the habit, common to-day, of using one's fingers for tallies. Had nature given us one finger less on each hand, our arithmetical base would have been eight; with one more, our base would have been twelve. Either would have served as well for counting as the number ten; and it is generally conceded among mathematicians, philosophers, and even among the advocates of the metric system, that either would have served far better than the number ten in enabling us to harmonize our system for counting with our system for the division of matter. The incommensurability of the number ten with either eight or twelve, and indeed with any other number, not a multiple, save two and five, the latter of which is almost never used for the division of matter (except where it is important to harmonize with the arithmetical base), has been a source of the greatest inconvenience since the interconnection of the two processes (counting and measuring) has become as intricate as it is to-day.

The makers of the metric system proposed to do away with this inconvenience by harmonizing the bases of the two processes. They did not, however, attempt to change the base of arithmetical notation; that, after due consideration,[3] they rejected (and no doubt justly) as too difficult a task to hope for accomplishment. The process of counting, with its tables of addition, subtraction, multiplication and division, being more fundamental even than the process of measuring, could never be re-taught to the mass of men, in the present stage of advancement of the popular mind, so that such a change would obviously never have obtained any permanent foothold among the masses. What they did propose to do was to bring the system of measurement into harmony with the system of numeration by decimalizing the former, and to this they saw no serious obstacles. What ones they found, in the prosecution of this gigantic undertaking, we shall see presently. The world has profited, if not by their system, at least by their experience.

It has been proposed, however, by those who have since labored with the same aims, but who have seen decided objections to this method, to retain and perfect our present system of measurement, and to trust to time the changing of our notation. Here, then, we reach the first division of our subject: that of simple *duodecimal weights and measures*, as opposed to decimal; and of *duodecimal notation*. The latter, being itself a matter requiring treatment at some length, if at all, will not be touched upon in this paper; nor even will the improvement of the present weights and measures receive more than brief attention. A lengthy consideration of these would only serve to obscure the main problem, which is, *whether the metric system shall, or can, be introduced so as to supplant our own.*

In order to get a clear view of the question in all its bearings, it will be necessary to take a brief glance at the history of the metric as well as of our present system of measuring.

---

[3] Whether or not they did give proper consideration to the matter of a duodecimal system of weights and measures, in place of a decimal, *without* a change of notation, we are not informed; but Delambre, in his *Base du Système Métrique* (tom. iii., p. 302), has answered some criticisms on this score by saying, that if it was found difficult to introduce the new system as it was, it would have been infinitely more so had the numerical base been changed in addition. It is tolerably obvious from this that they did not deem the unification of weights and measures on the duodecimal scale *merely*, leaving the other change to follow in course of time, as worth their consideration. They desired to accomplish everything at once, or nothing.

I. HISTORICAL.[4]

France.

The metric system was born in the fiery period of history known as the French Revolution. Its friends do not tell us much about its origin; indeed, they deprecate any mention of it as being irrelevant to its merits, "intrinsically imprudent," "ungrateful to the French government and people,"[5] etc. Nevertheless, in view of certain general statements as to what the French people have done, held up to us as an example of what we should do, it may be neither without interest nor without importance to take a look at the actual facts.

It was in the year 1790,[6] when the political upheaval in

---

[4] In the following summary of the events which have led to existing conditions, I have endeavored to be as concise as possible; only the events having an immediate bearing on the subject in hand have been noticed.

[5] J. W. Nystrom, in *Jour. Franklin Inst.*, Vol. CI., p. 385 (June, 1876).

[6] The reform of the weights and measures was one of the numerous demands made of the States-General, which met in May, 1789. It was referred to the Royal Society of Agriculture, two of whose members, MM. Tillet and Abeille, prepared a comprehensive memoir on the subject, which was presented to the Assembly Feb. 6, 1790. This is a masterly production, worthy of a place beside the work of Adams and the British committees, but which an unjust fate has consigned to the profound obscurity of the Archives. It reviews the history of the French and other weights and measures, and discusses the best means of restoring the original uniformity. I am mindful of the imperative limitations of my space, but I cannot forbear to quote their closing words:

"We desire, for the honor of humanity, that the result of so splendid a work [*i.e.*, an exhaustive investigation] shall be to substitute for the probabilities which many savants have already collected clear proofs of the ancient existence of a universal system of metrology. 'Everything leads us to believe that this system exists yet, and that it is only necessary to clear away the rust which disfigures the copies to find that the nations are using weights and measures whose mother-standard, found in nature, has always been the same. If this conjecture, already supported by the opinion of distinguished savants as well as by a large number of facts, observations and coincidences, should be found correct, it would be neither impossible nor difficult to recover the elementary type of the measures of all European, and perhaps of all civilized nations."

Lalande, the astronomer, also, wrote a *Memoir on the new measure proposed to be established in France*, an extract from which is appended to the above; in which he pointed out the uselessness of a "natural standard," and the very difficulties which have since been realized:

"The Paris toise is so well known throughout the world that I do not think it should be rejected for the seconds pendulum. . . . The only advantage *perceived* in it, would be to have England adopt a new measure taken from nature . . . ; but a general revolution in the two nations seems to me impos-

France was just beginning, and reforms, more and more radical, were being proposed on all sides, that the Prince de Talleyrand brought before the National Assembly a proposal to abolish the old system of weights and measures, to be in part or in whole replaced by a new one founded upon the length of the seconds pendulum, as suggested in the previous century by Huyghens. This proposal, somewhat modified, was adopted; and it was decreed, with laudable public spirit, that the British Parliament should be requested to coöperate in the formation of a joint commission of the Royal Society and the Academy of Sciences, for the determination of the length of the seconds pendulum and of the new system of measurement to be deduced therefrom. The British Parliament, however, declined this invitation; or rather (such was the distrust at that time caused by the rapidly darkening political horizon in France) sent them no answer. It is certainly to be regretted that circumstances made such action necessary; but we may be satisfied that, even if the proposal had been carried into effect, and the commission formed,

---

sible. The operation will be very *long*, very *embarrassing*, very *incomplete*. It will introduce confusion into the work of those who calculate, and be absolutely useless to those who do not.

"Moreover, it will not accomplish the object proposed. . . . For there will *always* be greater uncertainty in the length of the pendulum than there is in the difference of length of two standards. . . . Suppose we should actually make the pendulum experiments with all precision *now* possible; in 20 years, no doubt, they will be made *with still greater precision*, and a *difference* will be found of several hundredths [of a line]. Then, according to the adopted standard, we should have to say, by a new calculation: the seconds pendulum differs from our standard by so many hundredths. . . .

"It is then an illusion to imagine that the natural pendulum will *ever* be a *fixed* standard. . . .

"The society established at London for the encouragement of the arts, having proposed a prize in 1774 for a method of reducing the English measures to a fixed standard, *rejected the idea of the seconds pendulum*. . . .

"It seems to me, then, that the time has gone by for changing it [the Paris standard]. But the confusion which reigns in every part of France *is an intolerable abuse*, a relic of *absurdity* and *feudal barbarism*.

"Having tried to show that the Paris toise, so well known, ought not to be changed, I will say the same thing about the reformation of the calendar. Undoubtedly it would be better if our year commenced at the vernal equinox, and the months of 30 and 31 days were more regularly distributed; but this *advantage*, or rather this *simple convenience*, would never balance the inconveniences of the real disorder which would be found in our calendars, our epochs, our dates, our histories, our foreign relations if we began to reckon in a new manner."

Had these wise and moderate counsels prevailed, all would have been well!

the temper and aims of the two nationalities respecting the subject of debate would have made any agreement impossible.

Undiscouraged by this rebuff, the National Assembly persevered in their object single-handed, appointing for this purpose a committee of the Academy of Sciences, consisting of five of its most eminent members, viz.: Condorcet, Borda, Lagrange, Laplace and Monge.[7] A more illustrious committee probably never met together: every one of these men was of world-wide reputation; yet it contained a fatal defect. No man, however great, can comprehend things in all their relations. Life is too varied, and human wants too intricate, too broad, and too far-reaching ever to admit of it. Every man's experience is drawn from the one department of life in which he has found his vocation. All others he can know only in a general way. Among these great men there was not a merchant, not a lawyer, not a banker or capitalist, not an engineer, not an artificer of any description. Those who were most deeply concerned had not a single representative. These men were all mathematicians. They had spent their lives, not in "the world's broad field of battle," but in the contemplation of the stars, in the laboratory, the library and the closet. With the intricacies of trade they could not be expected to be familiar; they knew nothing of the practical working of machine-shops; the great processes of manufacture, on which life itself is now made to depend, were to them a sealed book. Is it, then, wonderful if they did not evolve something in all respects fitted to every-day service in the practical sphere? Would it not rather be strange if they had done so? Their genius, their skill, their perseverance during nine years of labor and many great discouragements, we cannot but admire. Their work will be a lasting monument of man's constant effort toward improvement. "It is one of those attempts," says John Quincy Adams,[8] "which, should it even be destined ultimately to fail, would, in its failure, deserve little less admiration than in its success." But the progress of the world cannot be made to depend on the devotedness and disinterested motives of any body of men; their

---

[7] H. W. Chisholm, a good authority, says that Lalande's name also is signed to the report (*Nature*, Vol. VIII., p. 386); but I have not been able to find it. Probably what is referred to is his memoir quoted above—a very different thing!

[8] Report to the Senate and House of Representatives, 1821. For an account of this report, which will be often quoted in this paper, see p. 531.

work must be gauged strictly by its intrinsic merits; and it is no reproach to them, no disparagement, if on such examination we find we cannot accept it.[9] The most experienced of committees, in facing a problem so enormous, so unprecedented, as the complete subversion of a national system of weighing and measuring, would not, perhaps, have done any better. But here, at any rate, was the first mistake (the *personnel* of the committee)—one that Great Britain, at least, whatever may be the faults of her weights and measures, has never made; and the evil effects of it showed themselves the instant the theory was put into practice.

This committee, after a brief consideration,[10] on March 19, 1791, reported in favor of a scheme which was practically the metric system as we know it. Three natural standards were considered; the pendulum beating seconds, a quadrant of the equator, and a quadrant of the meridian,[11] of which the last was chosen as the standard for comparison, and its ten-millionth part as the standard of linear measure, called the metre. The standards of weight and capacity were to be decimally related to the latter, the standard of weight being the weight of the volume of distilled water at the freezing-point contained in the standard of capacity.

In addition, the Celsius or centigrade thermometer was adopted in place of the Réaumur then in use, and the number of degrees in the quadrant was changed from 90 to 100, to correspond with the division of the earth-quadrant into metres. To complete the whole, a brand-new nomenclature was fitted to the metrical standards and their decimal multiples and submultiples.

---

[9] The preceding remarks will perhaps be called irrelevant. Perhaps they would be, were it not for the "arguments" frequently pressed upon us in print and lecture-hall.

[10] About five months; they were appointed in October (?), 1790. A British committee might have devoted as many years—a period entirely too long for France.

[11] The reasons given for the rejection of the first were, that its permanency was not definitely known, that it was too difficult to measure with accuracy, and that it involved the acceptance of a questionable unit of time; for the rejection of the second, that every nation did not possess a portion of the equator, and that it was hence not strictly international. It is to be observed, that time and experience have exactly reversed the order here given; for, as between the equator and a meridian, the latter being found to have no constant length in various parts of the globe, the choice of the equator would at least have avoided this difficulty; both, however, being finally rejected, and the pendulum being made the *real* standard.

It may be worth while to observe, for the sake of historical accuracy, that, notwithstanding generally received ideas, and that the Commission itself says nothing to the contrary, the idea of a universal system, as they embodied it, did not originate with them, but with a humble priest and choir-master of the collegiate church of St. Paul at Lyons, about a century previous. His name was Gabriel Mouton; his book was published in 1670. This man, who has never received any credit for his invention, proposed to decimalize, not indeed the *quadrant* of the earth's circumference, but the *minute*, his scheme being as follows:[12]

	1 millesima *or* punctum (point),	about	0.007	inches.
10 millesimae	= 1 centesima *or* granum (grain),	"	0.073	"
10 centesimae	= 1 decima *or* digitus (finger),	"	0.729	"
10 decimae	= 1 virgula (wand),	"	7.29	"
10 virgulae	= 1 virga (rod),	"	6	feet.
10 virgae	= 1 decuria *or* funiculus (cable),	"	61	"
10 decuriae	= 1 centuria *or* stadium (furlong),	"	608	"
10 centuriae	= 1 milliare = 1 nautical mile, or 1 minute of the equator.			

Mouton was also the first to propose the pendulum principle (discovered a few years before) for preserving the exact length of the standard, as La Condamine has admitted; and he carried out a highly creditable series of measurements on the pendulum for this purpose. Yet in the report of that great committee " we seek in vain for a proper recognition of obligation, and find in a few lines a mutilated account of Mouton's scheme, while he barely escapes condemnation in some words of faint praise from those who had thought of a universal measure."[13]

The report of the committee to the Academy was transmitted by that body March 26, 1797, to the National Assembly, which accepted it and immediately proceeded to carry out its provisions. A committee, consisting of MM. Méchain and Delambre,

---

[12] It will be seen that Mouton's unit is just equal to a fathom and very close to six English feet, and the alternative names he wisely gave to his units are such as the people would readily accept. It may truly be said that the parts the French Academicians altered they did not improve on.

[13] J. H. Gore, in *American Jour. Science*, January, 1891. Professor Gore says, further, regarding the report of the "Commission des Poids et Mesures" of 1799: "In the detailed account of operations which follow, there is interspersed a large amount of praise for the participants—from Talleyrand, who laid the proposition before the Assembly on May 8, 1790, down to the laborers who carried in the prototype. . . . But one looks in vain for a mention even of the name of the humble, modest priest who deserves the credit of first proposing 'a type taken from Nature herself, as unalterable as the globe which we inhabit.'"

was appointed to ascertain the length of a meridian by measurements on that passing through Paris between Dunkirk and Barcelona (the same was afterwards extended to Formentera), and to make sundry other measurements to the same end; another, consisting of Borda, Méchain and Cassini, to measure the length of the seconds pendulum, as a second standard of comparison; another, of Lefèvre-Gineau and Fabbroni (a foreign associate), to determine the standard of weight by experiments on water; and a large committee on weights and measures to form scales of comparison between the new and the old measures.

The work thus laid out required more than eight years for its completion. It was faithfully completed by the several persons to whom it had been encharged, to the best of their ability, and in the face of hardships, difficulties and discouragements of great magnitude, as well as of the ingratitude of the very nation which had appointed them and depended on the results of their labors. But it is not to be supposed that any such length of time was considered necessary by the National Assembly; France was at that time progressing too rapidly to admit of such delay; and scarcely two years had passed before the Assembly, losing its patience, on August 1, 1793, passed a law causing the new system, or rather a provisional system, to go into effect *immediately*, the dimensions of the standards being hastily computed from previous measurements, and a provisional nomenclature, entirely different from anything in use either before or since, being at the same time annexed. "This extraordinary law," says John Quincy Adams, "was probably intended, as it directly tended, to prevent the further prosecution of the original plan."

I need not dwell on the political details of that period. But from those bloody and fanatical scenes not even the abstruse and impartial labors of mathematics and mechanics were exempt. Méchain was made a political prisoner in Spain; Lavoisier, one of the most brilliant and active members of the Commission, and an associate of the first Committee, was guillotined, with twenty-seven others of his profession, in the idea that "the republic had no need of savants."[14] Condorcet, their

---

[14] This was the actual reply made to those who begged the life of Lavoisier. There seems to have been no particular reason for taking his life except that given. For his work in connection with the metric system, see *Nature*, Vol. IX., p. 185.

first chairman, poisoned himself in prison to escape the same fate. Of the rest, Borda, Laplace, Coulomb, Brisson, and Delambre, not being radical enough to suit the ideas of the time, were dismissed from the commission, and escaped the general proscription with their lives; the Academy of Sciences was abolished; and the work of the commission brought to a summary stop.

"Yet even Robespierre and his committee were ambitious, not only of establishing the system of new weights and measures in France, but of offering them to the adoption of other nations; . . . and on the 2d of August, 1794, the two standards were, by the then French minister plenipotentiary Fauchet, sent to the Secretary of State [in America], with a letter, recommending, with some urgency, the adoption of the system by the United States. This letter was communicated to Congress by a message from the President of the United States, of the 8th of January, 1795."[15]

Meanwhile to complete the scheme of tens by which everything henceforth was to be divided up, with the overthrow of the Government in 1792, the old calendar and divisions of time were swept away in their entirety, and replaced by one more modern, more simple and more systematic. They could not, to be sure, change the length of the day; nor could they make one hundred, or one thousand of them into a year; and as they had determined to retain the division into months, they found it necessary also to retain their number, twelve. To these months fanciful names were given.[16] Each consisted of three weeks or decades, each week of ten days, each day of ten hours, each hour of 100 minutes, and each minute of 100 seconds. This arrangement provided for only 360 days of the year, however; the remaining five or six, having no month to cover them, were derisively termed, in the political slang of the day, *Sansculottides,* and were turned into a kind of Saturnalia.

"The decimal divisions, and the fanciful contexture of the equinoctial calendar," says John Quincy Adams, "were a sort of episode to the new system of metrology. The attempt to decimate the year and its number of days was equally useless and absurd." Indeed, it may be called the *reductio ad absurdum*

---

[15] Quoted from the Report of John Quincy Adams.

[16] The year began at the autumnal equinox (September 22), when "the sun entered the sign of the balance, the symbol of equality."

of the decimal scheme. It was accordingly the first to break down, the day of 100,000 seconds not even outlasting the revolution from which it sprung.

During the same period, also, the decimal coinage of France was instituted. A law of October 7, 1793, made the weight of the new unit, the franc, to be ten grammes, both in gold and silver. It was never carried out, but superseded by one of August 15, 1794, reducing the silver franc to five grammes and abolishing the gold one. The livre of twenty sous was abolished altogether. This reform, however, was carried on somewhat separately from the other decimal measures; and owing to its only indirect connection with the subject in hand, and the lengthy details of the insane financial legislation with which it was accompanied (an equally instructive lesson for ourselves in another branch of political economy), the subject will not here be farther pursued.

Neither did the poor and imperfect methods of those who go down to the sea in ships escape the vigilance and devotedness of the philosophers in their efforts to improve the condition of the race. The decimal divisions of the quadrant, and its relation to the metre, have already been mentioned; to which were added, the new compass of 40 rhumbs instead of 32; the new log-line, divided into kilometres instead of nautical miles; the new sounding-line, divided into metres instead of brasses; and the new cable-length of 200 metres instead of 100 toises. And that the seaman might have the full benefit of the new system, though in his ignorance and prejudice he might not understand his best interests, he was compelled to use it at sea, just as his countrymen were on land. "A French navigator, suffering practically under the attempt thus to navigate, decimally, the ocean, recommended to the National Assembly to decree, that the earth should perform 400 revolutions in a year." [17]

In the republic thus inaugurated, in which all things were made new, it was a truism that they should not be allowed to become old. Accordingly the same law which, at the end of a year and a half,[18] abolished the decimal division of the day, abolished also the nomenclature of weights and measures established by the law of August 1, 1793. This was on April 7, 1795

---

[17] Report of John Quincy Adams.

[18] The decimal calendar, established by a law of October 5, 1792, was not made compulsory until November 24, 1793.

(my readers will be spared the "metrical" calendar). The Academy of Sciences, which had been itself abolished in August, 1793, was at the same time reconstituted, but under a new name, the "National Institute";[19] and finally, the old Commission of Weights and Measures was replaced by a new one of twelve persons, namely: Berthollet, Borda, Brisson, Coulomb, Darcet, Delambre, Lagrange, Laplace, Lefèvre-Gineau, Legendre, Méchain and Prony.[20] The "definitive" nomenclature, being that which we know, as formulated by the first committee, was now adopted; and the measurement of the meridian, after an interruption of a year and a half, was resumed. Towards the close of the work, in 1798, eleven foreign associates[21] were added to the commission, to give the new system an international character, or at least the appearance of one. In that year MM. Delambre and Méchain had finished their arduous work, and their report, when completed, together with all their observations and calculations, and all those of the committees on the length of the pendulum and the weight of the kilogramme, were finally subjected to the scrutiny of the mathematical and physical section of the National Institute, previous to their acceptation. The construction of a platinum standard metre, in accordance with the calculations, was delegated to Lenoir; of a platinum standard kilogramme, to Fortin;[22] which standards, when completed, were presented, on June 22, 1799, to the two branches of the National Assembly, amid great pomp and circumstance, and afterward carefully deposited in the National Archives.

The account of these operations, to the casual observer, no doubt, seems simple enough; or even, to use the words of Laplace before the National Assembly, "beautiful, grand, sublime, worthy of the brilliant age in which we live." But the remarkable facts, which only experience could reveal, and the

---

[19] *L'Institut National des Sciences et Arts.*

[20] *Nature*, Vol. VIII., p. 387. Adams gives Haüy, Monge, and Vandermonde in place of Darcet, Legendre, and Lefèvre-Gineau. Probably all were members at one time or another. The names of all these and several more are signed to the reports of the various sub-committees, etc.

[21] The countries represented were: Spain and the Batavian Republic, 2 each; Denmark, Sardinia, Tuscany, the Roman, Cisalpine, Ligurian and Helvetian republics, 1 each. Only three of these countries have now any political existence. It is to be observed that France had more members than all the others combined.

[22] Celebrated instrument-makers of Paris.

formidable doubts to which they gave rise, could not be compensated by the most precise of measurements,[23]—could not be obscured by the most elegant of theories, nor concealed by the grandest of ceremonies. Laplace and his colleagues had proceeded on the assumption that the earth was a perfect sphere, or at least a perfect spheroid, though the amount of ellipticity of the meridional section was not definitely known. It was the work assigned to Méchain and Delambre to determine this ellipticity with an exactness never before approximated. Their method depended on the relative length of the successive degrees of the arc they had selected for measurement. But it was found that these *had no definite relation.* The length of the degree was discovered to be a variable following no known law of variation, and only approximately the spheroidal law. But this was not all. Other measurements taken in Peru, Lapland and elsewhere proved the equator itself to be elliptical. Thus was the idea of *universality* for the new standard defeated; while the large assumptions made necessary in order to reconcile the discordant values of the degree rendered the minute accuracy of seven years completely vain. Years after the platinum standard had been filed away in the Archives it became definitely known that its length was seriously in error.[24] But when the question arose of constructing a new and correct standard to replace the old one, the uncertainty even then as to what *was* correct, and how long it would remain so, and, moreover, the superhuman task of finding out, were too great, and the supposed advantages of the exact ten-millionth part too small, to compensate for the infliction of still another standard of measurement on unfortunate France, already then laboring under no less than *four* different systems, three of which embodied the efforts of her philanthropic legislators to rid her of the fourth. So the principle which lay at the base of the whole system, as

---

[23] The angular measurements were made to the hundredth of a second of arc; the base-line measurements were made with a micrometer microscope (the measuring bars being laid end to end without touching), and carefully corrected in each case for temperature, etc. To Borda is due the credit of the construction of the instruments used for the purpose.

[24] The exact amount of the error remains unknown to this day, and owing to the uncertain nature of the natural standard, probably always will. It is generally reckoned that the metre is short by $\frac{1}{150}$ to $\frac{1}{188}$ of an inch. The "provisional" metre of April 7, 1795, was about $\frac{1}{100}$ of an inch longer than that finally adopted, and would therefore have made a better standard than the latter.

it had presented itself to the great minds which conceived it, was at length openly abandoned; and the labors of so many years, consecrated by the death of three of the nation's greatest sons,[25] remained in history only as the monument of an unsuccessful attempt after a worthy object.

It remained for the kilogramme to share the same fate as the metre. When the scheme was devised, the unique property of water, of *contracting* instead of expanding from the melting-point for a short distance up the thermometric scale, was unknown. This was the discovery of MM. Lefèvre-Gineau and Fabbroni; and though no doubt a famous discovery, it doubled the difficulty of their task, superadding a new one, that of finding the *point of maximum density* of water. But without going further into the work of the Commission it is sufficient to observe that the standard platinum kilogramme was found by later measurements, like the metre, to be in error by a small but measurable quantity; in spite of which, however, the standard of the archives, and *not* the cubic decimetre of water, was affirmed to be the true kilogramme, at the same time that the earth-quadrant was abandoned as a standard for the metre.

The two most fundamental principles of perfect simplicity and beauty having been of necessity resigned, let us now see how it fared with the third and most important, viz., the decimal divisions, involving the use of the scientific nomenclature. The new language of measurement was as near perfection as could well be desired. One meaning, and but one, was attached to each word; the terms were mutually exclusive; and there was not the slightest danger of confusion with the existing units. "The theory of this nomenclature," says John Quincy Adams, "was perfectly simple and beautiful. Twelve new words, five of which denote the things, and seven the numbers, include the whole system of metrology; give distinct and significant names to every weight, measure, multiple, and subdivision of the whole system; . . . and keep constantly present to the mind the principle of decimal arithmetic. . . . Yet this is the part of the system which has encountered the most insuperable obstacles in France. The French nation have refused to learn, or repeat these twelve words. . . . They take the metre; but they must call one-

---

[25] Méchain died September 20, 1805, from the effects of a fever contracted in the completion of the work in Spain. For Condorcet and Lavoisier see page 501. Borda also died February 20, 1799, but from natural causes.

third part of it a foot. They accept the kilogramme; but instead of pronouncing its name, they choose to call one-half of it a pound." The same perversion of terms is common in France to this day. "The cheerful, ready, and immediate adoption, by the mass of the nation, of these twelve words, would have secured the triumph of the new system in France. . . . The *setier* would no longer have been a common representative for 12 boisseaux of corn, for 14 of oats, for 16 of salt, and for 32 of coal, and for 8 pints of wine. . . . It is mortifying to the philanthropy, which yearns for the improvement of the condition of man, to know that this is precisely the part of the system which it has been found impracticable to carry through."

Such, then, was the condition in France in 1821, twenty-five years after the inauguration of the metric system; and such it remained for the twenty years following. But let us return once more to the period of the Revolution to inquire after the fortune of the decimal divisions. (It is almost a foregone conclusion that they could not go very far without their names.) It will be remembered that the same day (April 7, 1795) that saw the adoption of the new nomenclature saw also the rejection, after a year and a half's trial, of the decimal divisions of the day; though it is to be remarked, that in one sense these divisions contravened the original plan, by establishing a new value for the length of the pendulum, which was to act as a secondary standard of comparison for the metre. The same law prescribed the use of the decimal divisions *exclusively* for weighing and measuring, under pains and penalties. It is unnecessary to mention what opposition to the law meant in those days. But not even Gallic philosophy could long put up with the intolerable inconvenience of such regulations; and an attempt was made, late in 1799, to allow the use of the old terms, at least, in substitution for the new ones. Though unsuccessful, this attempt was followed by a gradual relaxation, which finally became complete. On April 8, 1802, the week of ten days was repealed. On November 23, 1802, the law prescribing the form and dimensions of casks for wine and other liquors in an exact number of litres[26] was repealed—a law whose folly was evident from the fact that it entirely precluded any commerce whatever in those commodities between other countries (such as Eng-

---

[26] There was a list of prescribed sizes and dimensions in millimetres from 50 to 1,000 litres.

land) whose laws prescribed other and customary sizes. On September 9, 1805, the whole of the remaining portion of the new calendar was formally abandoned. Finally, on February 12, 1812, after more than eighteen years of compulsion, and at a moment when a widely popular measure was required of him, the Emperor Napoleon issued a decree completely abandoning, except for a few special cases, the decimal principle, and restoring once more to the people the foot, the ell, the toise, the pound, the boisseau, and all their customary subdivisions.

This new enactment was called the *Système Usuel;* but it was far from being the usual system. For the measures to which these terms were now applied were not the old measures, but near approaches to them only, in terms of the metrical units. Thus, the toise was not the old toise, but two metres; the foot was not the old foot, but one-third of a metre; the ell was 12 decimetres; the boisseau ⅛ hectolitre, and so on.

The effects of this unfortunate new attempt to relieve the commercial distress of the nation may well be imagined. For besides giving to it, as to its units, names which neither it nor they could justly lay claim to, it merely superadded a new mode of measurement to the already existing diversity instead of driving them out, as perhaps its promulgator had imagined. The unhappy country now had no less than *four* different systems, viz.—(1) that which existed before the Revolution, of which, says Mr. Adams, "there is yet (1821) a very extensive remnant in use;" (2) the "Provisional System," established during the Revolution; (3) the "Definitive System," established December 10, 1799; and, lastly (4) the "Usual System," so called, of February 12, 1812. It was not attempted to compel the use of this latter, it being the idea of the Emperor to use it only as a makeshift until, at the end of ten years, experience and deliberation should have shown the best way out of the thick cloud of difficulties which presented themselves; a period, long before the expiration of which the first empire and its glories had vanished, and, it is deeply to be regretted, any improvement in existing conditions forestalled.

Then ensued twenty-five years of inextricable chaos and countless frauds. "The small dealers in groceries and liquors, and marketmen, gave the people the fifth of a kilogramme for a half-pound, and a fifth of the litre for a half setier. . . . The half-setier, just equivalent to our half-pint, was the measure in most common use for supplying the daily necessities of the poor; and thus the decimal divisions of the law became snares to the honesty of the seller and cheats upon the wants of the buyer."[27] Finally, when a king[28] was again seated on the throne of France, on July 4, 1837, a royal decree was issued repealing that of 1812, and ordering the exclusive use of the decimal metric system. It was followed by two others of 1839 modifying the denominations allowable, and prescribing the form and dimensions of all instruments and measures. These laws came into force on January 1, 1840, since which date no further attempts have been made to meddle with so dangerous a subject—the experience of the past having proved a sufficient guide for the conduct of the future.

We will not here follow further the progress of the metric system; but before continuing our history, we may profitably pause to reflect upon the lesson and the warning which is here set before us; not to do so would argue a heedlessness and want of sound judgment equalled only by that of the unlettered demagogues whom the social upheaval of the French Revolution brought to the front. It is indeed unfortunate to be obliged to recount the story of the past failings and mistakes of a sister republic in her imitation of our own struggle for liberty; nevertheless, since we are asked to pursue a course of compulsory legislation similar to theirs, the subject is too important to allow of our reason being subdued by our sentiment. And here I cannot do better than once more to quote from the Report of John Quincy Adams.

"The changes which have forced themselves upon the new system, under the attempt to reduce it to practice, should serve as admonitions to correct the errors of theory." . . . "The decimal numbers applied to the French weights and measures, form one of its highest theoretic excellences. It has, however, been proved by the most decisive experience in France, that they are not adequate to the wants of man in society; and for all the purposes of retail trade, they have been formally abandoned. The convenience of decimal arithmetic is in its nature merely a convenience of calculation; it belongs essentially to the keeping of accounts; but it is merely an incident to the transactions of trade. It is applied, therefore, with

---

[27] Report of John Quincy Adams.

[28] Louis Philippe.

unquestionable advantage to moneys of account, as we have done: yet, even in our application of it to the *coins*, we have not only found it inadequate, but in some respects inconvenient." . . . "A glance of the eye is sufficient to divide material substances into successive halves, fourths, eighths and sixteenths. A slight attention will give thirds, sixths and twelfths. But divisions of fifth and tenth parts are among the most difficult that can be performed without the aid of calculation. Among all its conveniences, the decimal division has the great disadvantage of being itself divisible only by the numbers two and five." . . . "For all the uses of weights and measures, in the ordinary application to agriculture, traffic, and the mechanic arts, it is perfectly immaterial what the natural standard to which they are referable, was. The foot of Hercules, or the arm of Henry the First, or the barley-corn, are as sufficient for the purpose as the pendulum, or the quadrant of the meridian. The important question to them is the correspondence of their weight or measure with the positive standard." . . . "The standard taken from the admeasurement of the earth had no reference to the admeasurement and powers of the human body. The metre is a rod of forty inches: and by applying to it exclusively the principle of decimal division, no measure corresponding to the ancient foot was provided. An unit of that denomination, though of slightly varied differences of length, was in universal use among all civilized nations; and the want of it is founded in the dimensions of the human body. Perhaps for half the occasions which arise in the life of every individual for the use of a linear measure, the instrument, to suit his purposes, must be portable, and fit to be carried in his pocket. Neither the metre, the half-metre, nor the decimetre are suited to that purpose. The half-metre corresponds indeed with the ancient cubit; but perhaps one of the causes which have everywhere, since the time of the Greeks, substituted the foot in the place of the cubit, has been the superior convenience of the shorter measure. Besides which, the cubit being the unit, the half-cubit might serve the purposes of the foot; but the metre, divisible only by two and by ten, gave no measure practically corresponding with the foot whatever." . . .

"Thus, then, it has been proved, by the test of experience, that the principle of decimal divisions can be applied only with many qualifications to any general system of metrology; that its natural application is only to numbers; and that time, space, gravity and extension inflexibly reject its sway. The new metrology of France, after trying it in its most universal theoretical application, has been compelled to renounce it for all the measures of astronomy, geography, navigation, time, the circle, and the sphere; to modify it even for superficial and linear measure, and to compound with vulgar fractions in the most ordinary and daily uses of all its weights and all its measures. . . . Yet a system of weights and measures, which excludes all geography, astronomy, and navigation, from its consideration, must be essentially defective in the principle of uniformity."

The metric system, then, formed in fact a long chain, in which "the metre and the second were the intermediate links connecting science and practical life, having the solar system at one end, and a quart measure at the other."[29] The fault of its inventors was that, being accustomed to the contemplation of the universe, they began at the wrong end of this chain. They were so anxious to obtain a system which should be utterly free from any taint of partiality or national prejudice, which should be ideally and absolutely perfect, which should be as lasting as the globe and never need revision, that they could find their type only in the heavenly harmony from which "this universal frame began." But alas for this perfection! for when they had, by the long and laborious processes of science, arrived at the other end of the chain, man was found to be so imperfect a being, that the scheme was unsuitable to his use, and that he either could not, or would not, accept it. It was in vain to launch legislative thunders or to deprecate his ingratitude: the legislator and the scientist alike found that they had arrived at a force which they could not control—a bound beyond which they could not pass. It has never been suggested that any other nation, or the same nation under any other circumstances, would have ventured even to think of such an undertaking, or to have made their selection of a system of measurement in the same manner or on the same basis. It is therefore concluded that the opinion is not without justification, that the metrical is "the most unpractical of systems, which required

---

[29] Report of Committee of the Franklin Institute, *J. Frank. Inst.*, June, 1876, p. 370.

the most theoretical, sentimental and revolutionary of nations to adopt it."[30]

Great Britain.

Let us now turn to a brief review of the less pretentious history of our own homely English system, or lack of it (a phrase which the metric advocates are fond of using). There are even some who derisively assert that it has no history; and that, like Topsy in *Uncle Tom's Cabin*, it was never made, but "jest growed." It is true that its history has been less brilliant than the other; but it has been age-long in duration. It is true that it has no immortal genius to father it, or if it has, his name is buried in antiquity,—as even that of Laplace may some day be; the only father to whom it can now lay claim is Man in the aggregate. But if the custom still obtains of putting "age before beauty," then our own system must take the precedence. This is more important than may at first appear; for it must be remembered that our system of weighing and measuring is the result of centuries of natural selection—the sole survivor of hundreds of others which have lived and died or still exist only in semi-civilized countries; while the new-comer has yet to stand the test of time. But, what is most important of all, *possession is nine points of the law;* so that it is not merely a question as to which is the better of the two, abstractly considered, but the *onus probandi* is entirely upon the later system, and it must show incontestable superiority over that now in use before it can presume to take its place.

In order to see shortly whether the latter really is a system, though somewhat the worse for wear, we have only to turn to the statute-book of England for the year 1266, where we find that

"By the consent of *the whole realm* of England, the *measure* of the king was made; that is to say, that an English *penny*, called a sterling, round, and without any clipping, shall weigh thirty-two wheat corns in the midst of the ear, and twenty pence do make an ounce, and twelve ounces one pound, and eight pounds

---

[30] L. D. Jackson, "Simplified Weights and Measures," Spon, London, 1876. So also Gen. C. W. Pasley: "I believe that no plan of a public measure of any importance was ever worse concocted or more injudicious, or has been subject to more capricious changes, than what was originally called the Republican system of weights and measures." (Paper read before British Association, Section F, Aug. 12, 1856.)

do make a gallon of *wine*, and eight gallons of *wine* do make a London bushel, which is the eighth part of a quarter." [31]

We have here a law which, as Mr. Adams truly remarks, "unfolds a system of uniformity for weights, coins and measures of capacity, very ingeniously imagined, and skilfully combined;" and, he might have added, far excelled in its practical adaptation to the wants of its users, the "theoretic excellences" of the French decimal system. "Under this system, wheat" (the chief article of commerce) "was bought and sold by a combination of every property of its nature, with reference to quantity; that is, by number, weight, and measure. It makes wheat and silver money, the two weights of the balance, the natural tests and standards of each other. It combines an uniformity of proportion between the weight and the measure of wheat and of wine" (the chief liquid of commerce). "To this, with regard to wheat, it gave the further advantage of an abridged process for buying or selling it by the number of its kernels."

"The only notice," continues Mr. Adams, "which most of the modern writers upon English weights and measures have taken of this statute, has been to censure it for taking kernels of wheat as the natural standard of weights; with the very obvious remark that the wheat of different seasons and of different fields, and often even of the same field and the same season, is different. *But the statute is chargeable with no such uncertainty.* The statute merely describes how the standard measure of the exchequer . . . was made."

In order to understand more perfectly the system embodied in the statute, let us represent it in the form of a table:

4 × 8 wheat-corns	make	1 penny sterling.
20 pence	"	1 ounce.
12 ounces	"	1 *sterling* pound.
8 pounds (of *wheat*)	make	1 wine-gallon (by *measure*).
8 wine-gallons of *wine*	"	1 bushel (by *weight*).
8 bushels	"	1 quarter.

It is to be observed that the basis for the whole system rests upon the easterling [32] or sterling pound; and that therefore the

---

[31] Cited by J. Q. Adams in his Report. The italics are his.

[32] This name is said to be derived from the weight having been originally introduced by "easterlings," *i.e.*, French and German traders; but it is certainly far more ancient. The standard dated probably from Charlemagne, and was

the most theoretical, sentimental and revolutionary of nations to adopt it."[30]

Great Britain.

Let us now turn to a brief review of the less pretentious history of our own homely English system, or lack of it (a phrase which the metric advocates are fond of using). There are even some who derisively assert that it has no history; and that, like Topsy in *Uncle Tom's Cabin*, it was never made, but "jest growed." It is true that its history has been less brilliant than the other; but it has been age-long in duration. It is true that it has no immortal genius to father it, or if it has, his name is buried in antiquity,—as even that of Laplace may some day be; the only father to whom it can now lay claim is Man in the aggregate. But if the custom still obtains of putting "age before beauty," then our own system must take the precedence. This is more important than may at first appear; for it must be remembered that our system of weighing and measuring is the result of centuries of natural selection—the sole survivor of hundreds of others which have lived and died or still exist only in semi-civilized countries; while the new-comer has yet to stand the test of time. But, what is most important of all, *possession is nine points of the law;* so that it is not merely a question as to which is the better of the two, abstractly considered, but the *onus probandi* is entirely upon the later system, and it must show incontestable superiority over that now in use before it can presume to take its place.

In order to see shortly whether the latter really is a system, though somewhat the worse for wear, we have only to turn to the statute-book of England for the year 1266, where we find that

"By the consent of *the whole realm* of England, the *measure* of the king was made; that is to say, that an English *penny*, called a sterling, round, and without any clipping, shall weigh thirty-two wheat corns in the midst of the ear, and twenty pence do make an ounce, and twelve ounces one pound, and eight pounds

---

[30] L. D. Jackson, "Simplified Weights and Measures," Spon, London, 1876. So also Gen. C. W. Pasley: "I believe that no plan of a public measure of any importance was ever worse concocted or more injudicious, or has been subject to more capricious changes, than what was originally called the Republican system of weights and measures." (Paper read before British Association, Section F, Aug. 12, 1856.)

do make a gallon of *wine*, and eight gallons of *wine* do make a London bushel, which is the eighth part of a quarter." [31]

We have here a law which, as Mr. Adams truly remarks, "unfolds a system of uniformity for weights, coins and measures of capacity, very ingeniously imagined, and skilfully combined;" and, he might have added, far excelled in its practical adaptation to the wants of its users, the "theoretic excellences" of the French decimal system. "Under this system, wheat" (the chief article of commerce) "was bought and sold by a combination of every property of its nature, with reference to quantity; that is, by number, weight, and measure. It makes wheat and silver money, the two weights of the balance, the natural tests and standards of each other. It combines an uniformity of proportion between the weight and the measure of wheat and of wine" (the chief liquid of commerce). "To this, with regard to wheat, it gave the further advantage of an abridged process for buying or selling it by the number of its kernels."

"The only notice," continues Mr. Adams, "which most of the modern writers upon English weights and measures have taken of this statute, has been to censure it for taking kernels of wheat as the natural standard of weights; with the very obvious remark that the wheat of different seasons and of different fields, and often even of the same field and the same season, is different. *But the statute is chargeable with no such uncertainty.* The statute merely describes how the standard measure of the exchequer . . . was made."

In order to understand more perfectly the system embodied in the statute, let us represent it in the form of a table :

4 × 8 wheat-corns	make	1 penny sterling.
20 pence	‘‘	1 ounce.
12 ounces	‘‘	1 *sterling* pound.
8 pounds (of *wheat*)	make	1 wine-gallon (by *measure*).
8 wine-gallons of *wine*	‘‘	1 bushel (by *weight*).
8 bushels	‘‘	1 quarter.

It is to be observed that the basis for the whole system rests upon the easterling [32] or sterling pound; and that therefore the

---

[31] Cited by J. Q. Adams in his Report. The italics are his.

[32] This name is said to be derived from the weight having been originally introduced by "easterlings," *i.e.*, French and German traders; but it is certainly far more ancient. The standard dated probably from Charlemagne, and was

people had constantly before them the standard of weight in the silver shilling (not here mentioned) and the silver penny; until—what has invariably happened—the debasement of the currency began, and was continued by one monarch after another, leaving the people without any standard, and throwing the values of the other quantities into confusion.[53] But it is also to be observed that the capacity measures, the gallon, bushel and quarter, are established by weight, not by volume; a circumstance which marks the origin of the *two* weights and *two* measures which are still extant; two weights, one for silver, the other for merchandise; two measures, one for wine, the other for wheat. For each of these are, or originally were, related to each other in the ratio of the specific gravities of wine and wheat—the chief liquid and solid articles of commerce; that is, in the ratio of 4 to 5.

Now the statute states that "eight pounds do make a gallon of wine," meaning "eight pounds of wheat fill a wine-gallon;" as is seen by a subsequent confirmatory act (1304), which expressly mentions eight pounds of wheat. But in the next clause it states that "eight gallons of wine do make a London bushel," in which the wine-gallon is used in its usual sense as a weight, not a measure, and is filled with wine, not with wheat. There can be no doubt that the use of the same expression to mean two different things—a weight and a measure—is a serious defect in the statute, viewed as a guide for future generations; and it is, in fact, this very ambiguity which has led to confusion, contradictory laws, and a multiplicity of measures. This law,

---

derived originally from the Romans; and, according to Mr. Adams, "had been used at the mint for centuries before the Conquest." The pound of Charlemagne was called *livre esterlin;* Mr. Adams concludes that there was also a western pound, which was the original of the avoirdupois. There was indeed a *libra occidua Valentiniani*—a western pound of Valentinian (4th century), the first ruler of the Western Empire; but what this pound was is doubtful. (DuCange, *Glossarium Med. et Inf. Lat.*, ed. Henschel & Favre, 1885. tom. 5. p. 95, art. *Libra.*) It is probable, however, that it was the Greek *mina* of sixteen ounces. But the sterling was not the same as either the troy or the avoirdupois pound, which, though derived from the same original source, were not introduced until the following century; and in the jumble which followed, some features of the old system engrafted themselves on the new.

[53] The present pound sterling contains less than one-third its original weight of silver. But the French *livre*, at the time of the French Revolution, contained less than $\frac{1}{79}$ part of its original weight.

however, merely crystallized the common usage, and its terms were perfectly understood at the time it was enacted.

But neither wheat nor wine was weighed by the *sterling* pound of twelve, but by the *commercial* pound of fifteen ounces; as is seen once more by the confirmatory act of 1304, which says that "every pound of *money* and of *medicines* consists only of twenty shillings weight; but the pound of *all other things* consists of twenty-five shillings. The ounce of medicines consists of twenty pence, and the pound contains twelve ounces; but in other things, the pound contains fifteen ounces, and, in both cases, the ounce is of the weight of twenty pence." Both the act of 1266, indirectly, and that of 1304, directly, therefore, established the ratio of the two weights, viz., 4 to 5.

Although at this period the lighter pound was used neither for liquid nor for grain, it undoubtedly originated from the use of a common *measure* for both. The gallon measure, for instance, would contain eight pounds of wheat, or eight pounds of wine; but the former pound was only four-fifths the weight of the latter. Afterwards, however, the process was reversed, and the pound of wheat being made equal to the pound of wine, the *gallon* of wheat (the so-called "corn-gallon," now obsolete) was of a capacity one-fourth greater than the gallon of wine. Hence arises the unfortunate circumstance that there still survive among us two different *weights*, each called a pound; and two different measures of *capacity*, each called a gallon. Undoubtedly it was for convenience that each of these relations was originally instituted, and no ambiguity ever arose from them; but with the extension of commerce and manufacture to the infinite variety of substances now weighed and measured, and the growing necessity for greater exactness, the original convenience was lost; while the blunders of six centuries of parliaments and kings, through an age when printing and railroads were unknown, and elementary education the exception, have almost effaced the relations.

There are many in these days, who, unconscious of the past, are attempting to introduce the metric system in English-speaking countries; it is the custom of these to jeer at the English weights and measures as a mere "heap of rubbish," which do not and never did possess any connection with each other, but were picked up at random, no one knows where. "That a legal bushel in the United States must contain 2,150.42 cubic inches," exclaims one of them, "is *convincing* evidence that the foot or the yard has *no* place in its ancestry." [34] Unfortunately for this and similar statements, the exact opposite is the case. Had their authors even stopped for a reasonable time to *think*, it might have occurred to them that, even to-day, the standard gallon of the United States (231 cubic inches) is *nearly* the eighth part (216 cubic inches) of the cubic foot, and filled with water weighs *nearly* eight (8⅓) pounds; that the standard bushel (2,150.42 cubic inches) is *nearly* equal to ten of these gallons, or 1¼ cubic feet (2,160 cubic inches); that, conversely, the imperial gallon of Great Britain (277.274 cubic inches) weighs *exactly ten* pounds of water, and is the *exact eighth* part of the imperial bushel (2,218.19 cubic inches); that the ratio of the pound troy to the pound avoirdupois is *nearly* the same as that of the gallons of the two countries; that a cubic foot of distilled water weighs *nearly* 64 pounds, and thirty-two such cubic feet *almost exactly* one ton (1,997.6 pounds at maximum density); and that finally all these approximate relationships of eight, ten, and their multiples could hardly be a *mere* accident.

But although these relationships point to a remarkably well organized system which must have existed somewhere, at some time, they are not all in evidence from the statute of 1266. In order to discover the remainder, as they existed in England at this time, we must have recourse to other statutes, and also to calculation.[35] Now the wine mentioned in the statute, being that commonly used in England at that time, was "Gascoign," or Bordeaux, wine (*i.e.*, claret), whose specific gravity is 0.9935, or about 61.94 avoirdupois pounds to the cubic foot. And the sterling pound of 12 ounces, being $\frac{1}{16}$ lighter than the troy pound, contained 5,400 troy grains; whence the commercial pound of 15 of the same ounces contained 6,750 troy grains. The cubic foot of wine, therefore, which weighed 61.94 avoirdupois pounds, weighed $\frac{7000}{6750} \times 61.94$, or 64.24 of the old commercial pounds—a number as near to 64 as the accuracy of the calculation allows of.[36]

---

[34] T. C. Mendenhall, in *Trans. A. S. C. E.*, Vol. XXX., p. 120 (October, 1893). The italics are mine.

[35] For these figures, and for many of the facts here presented, concerning the old English weights and measures, as well as their ancient prototypes, I am indebted to the labors and genius of John Quincy Adams, as embodied in his Report.

[36] The difference would be accounted for by a difference in the length of the foot of $\frac{16}{1000}$ of an inch.

The gallon of wine, therefore, which in 1266 weighed eight commercial and ten sterling pounds, was the exact eighth part of a cubic foot, and was contained in a cubical vessel of six inches on a side, as the pound of wine was in one of three inches on a side. This gallon contained exactly 216 cubic inches; and the corn-gallon of the same period 270 cubic inches; and the bushel, which was eight corn-gallons by measure, and eight wine-gallons by weight, 2,160 cubic inches; and the quarter of eight bushels, 10 cubic feet.

In order to prove that this relationship of the unit of length to those of weight and capacity was an intentional one, and not a mere coincidence, we must look still farther back, to the Romans, from whom, in the time of the empire, the English had their weights and measures. Here, again, we find two units of weight, the *libra* and the *librarius*, related to each other as 3 to 4, and of twelve and sixteen *unciæ*, respectively; the unit of liquid measure, the *congius*, corresponding with our wine-gallon, was defined as equal to 10 *libræ* (as the old English gallon was to 10 sterling, and our gallon to about 10 troy pounds) of water or wine; the unit of dry measure, the *modius*, corresponding with our peck, was equal to 16 *librarii* of wheat. Eight *congii* were an *amphora*, which was also called a *quadrantal*, and defined as 80 *libræ* of water or wine. Now *quadrantal* is the Latin for cube, and the measure cubed to make the *amphora* was the Roman foot. This custom undoubtedly arose from the measure of shipping, the *amphora* being always used to express the burden of a ship.[37]

"The same combinations are traced with equal certainty to the Greeks and Egyptians; and if the shekel of Abraham was the same as that of his descendants, the avoirdupois ounce may, like the cubit, have originated before the flood."

But it would be beside our present purpose to follow Mr. Adams in his researches in ancient metrologies; it will suffice to quote his conclusions. "This system of weights and measures has been, by many of the modern English writers on the subject, supposed to have been *established* by the statute of 1266. But upon the face of the statute itself it is a mere exemplification of ancient ordinances. The coincidences in its composition with those of the ancient Romans, proved by the letter of the

---

[37] See the note at the end of this paper.

Silian law, and by the still existing *congius* of Vespasian; with those of the Greeks, as described by Galen, and as shown by the proportions between their scale weight and their metrical weight; and with that of the Hebrews, as described in the prophecy of Ezekiel; show that its origin is traceable to Egypt and Babylon, and there vanishes in the darkness of antiquity. As founded upon the identity of nummulary weights and silver coins, and upon the relative proportion between the gravity and extension of the first articles of human traffic, corn and wine, it is supposed to have originated in the nature and relations of social man, and of things."

This system, then, whenever and however it originated, has survived the critical scrutiny of the Egyptians, the most ancient of civilized nations; of the Greeks, the most philosophic; of the Romans, the most logical; and of the Anglo-Saxons, the most progressive. Nay, it has not only survived but has supplanted other systems, has spread all over Europe, to the Scandinavians on the north and the Slavs on the east. It, and it alone, has shown itself fitted in its essential principles, to be extended "to all peoples and all times." The French system has not produced, but driven out, uniformity. It is true that every provincial town, almost, of the Continent had its separate pound, foot, and quart or peck; but the fact that all *had* these measures, of values not very different from each other, is a sufficient indication of what a proper comprehension of the subject, aided with a *little* legislation, might have done. The elements of uniformity were all there, and needed but to be called to order.

But to return to our historical survey. As ships increased in size, larger measures became necessary, and hence arose the tun or ton, unknown to the Romans, but like the *amphora* originally a measure of cubical capacity, and afterward turned into a weight. The tun was undoubtedly formed by doubling and redoubling the lesser measures; thus the hogshead of wine, corresponding with the quarter of wheat, was of 64 gallons; two hogsheads were a pipe, and two pipes a tun. The tun, therefore, was originally a measure of 256 gallons, or 32 cubic feet, and was the volume of 2,048 commercial pounds of *wine*.[38] This

---

[38] The fact that 32 cubic feet of *water* are now so nearly equal to our *ton* of 2,000 *pounds avoirdupois* is a result of three separate changes affecting each of the quantities italicized. The present pound, being $\frac{1}{27}$ heavier than the old

must, however, have been early changed to a lesser number, for a statute of 1423 declares that "*of old time* it was ordained that . . . a tun of wine [should be] 252 gallons," no doubt to accommodate it more exactly to the *then* size of the casks, which, then as now, had an irrepressible tendency to dwindle in size. This was the change which first brought discord into the system; for as the tun still continued to be reckoned at 32 cubic feet, it made the wine-gallon consist of 219.43 cubic inches; taking now the more exact ratio of the weight of wheat and wine, 143 to 175, the corn-gallon weighed against it would be 268.53 cubic inches, eight of which are 2148.25 cubic inches, practically the Winchester bushel.

A series of similar legislative mistakes produced the Winchester gallon, along with the other multifarious gallons, bushels, etc., which till within a few decades were in legal use. The confusion was largely increased by the introduction, during the fourteenth century, by continental traders and immigrant merchants, of the troy and avoirdupois pounds, both of which were heavier than the older units, and which superseded and were mistaken for the latter. Passing over this period, however, and the separate mistakes which produced each value, the first step of importance looking toward a restoration of uniformity was that taken by the Royal Society in 1736, when a movement was instituted to reduce the various measures to a single standard. The movement was renewed in 1742, and resulted, after a delay of some years, in the selection, by the Weights and Measures Committee of the House of Commons, of a prominent optician, named Bird, to whom was entrusted the construction of a standard yard which should most nearly represent the previous standards, all of which were gathered together for the purpose from all parts of the kingdom. This standard yard, an excellent specimen of workmanship, was completed in 1760. A standard troy pound had also been completed in 1758. Neither were, however, ever formally adopted by law as the legal standards. From these standards all others in Great Britain and this country have been derived.

---

pound, gave wine a weight of 61.9, and water a weight of 62.4 pounds per cubic foot. Had this been 62.5, we should have had exactly 32 cubic feet in 2,000 pounds. But that 62.5 pounds should, by our present subdivision, be just 1,000 *ounces* is altogether a numerical accident, and formed no part of the original design.

The next action (bating a determination of the density of water and the length of the pendulum by Sir Geo. Shuckburgh in 1798) was not taken till 1814, when Sir John Wrottesley brought the decimal system of weights, measures and coinage to the notice of Parliament, and a commission was appointed to investigate the subject with a view to establishing a national standard, and a similar commission was appointed in 1819. It was at this time that the Government, foreseeing the necessity of deciding at once, if at all, whether any and what radical changes could be made in the existing system for the benefit of the public, undertook thus early to investigate the merits of a decimal scale of division. Their first report, signed by all the Commissioners, including Dr. Thos. Young, Dr. Wm. H. Wollaston and Capt. Henry Kater,[39] was in 1819, and the conclusions set forth are adverse to the decimal scale, as follows :

"The subdivisions of weights and measures at present employed in this country appear to be far more convenient for practical purposes than the decimal scale, which might perhaps be preferred by some persons, for making calculations with quantities already determined. But the power of expressing one-third, one-fourth, one-sixth of a foot in inches without a fraction is a peculiar advantage of the duodecimal scale," etc.

The report of this commission was accepted and followed up by decisive action by the Government. In 1824 an act was passed establishing an Imperial System, and abolishing all previously existing standards. A new standard yard was prepared, copied from that of 1760, and also a new standard troy pound copied from that of 1758. It was by this act that the imperial standard gallon was defined as the volume of ten avoirdupois pounds weight of water, in the latitude of London, at 62° Fahr. and 30 inches pressure ; and the bushel to be equal to eight gallons. Elaborate measurements were also made by Young, Wollaston and Kater on the length of the seconds pendulum and the density of water, for comparison with the yard and pound; the inch was declared to be the $\frac{1}{39.1393}$ part of the length of the seconds pendulum, and the cubic inch of distilled water at 62° Fahr. and 30 inches pressure to weigh 252.458 grains, of which 5,760 made the troy, and 7,000 the avoirdupois pound. This

---

[39] The other three commissioners were Jos. Banks, George Clerk and Davies Gilbert.

act took effect on January 1, 1826, and was followed by another one in 1835, still further consolidating the Imperial System.

But the British scientists committed the same error as the French had before them; for when the time came to carry out the rules so carefully and laboriously established, it was found to be impracticable. This was in 1834, when both houses of Parliament were destroyed by fire, and with them the standards so carefully prepared only ten years before.

Among the earliest steps taken to repair the loss of the standards was the appointment in 1838, by the Chancellor of the Exchequer, Lord Monteagle, of a Preliminary Commission to consider and report on the proper mode of restoration. This Commission almost rivalled that of France of 1790, in the illustrious names numbered on its roll; they were Airy, Baily, Herschel, Lubbock, Peacock, Sir J. S. Lefevre, Mr. D. Bethune and Rev. R. Sheepshanks, of which the first-named was chairman.

They made a full and careful report about the close of 1841; in which they declared their opinion that the several elements of reduction of the pendulum experiments of 1824 were doubtful or erroneous, and that therefore a repetition of them would not necessarily reproduce the standard yard. It appeared also that the determination of the density of water, on which rested the standard pound, could not be made with a greater accuracy than $\frac{1}{1200}$ part; whereas an accuracy a hundred or even a thousand times as great was nothing uncommon in the operation of weighing. These methods, then, were, as in the case of the French standards, formally abandoned, and resort had to a careful comparison with the still existing copies of the old standards.

This Preliminary Commission, besides these recommendations, also gave careful consideration to the entire subject of weights and measures, and particularly to the decimal system. They recommended, however, that no change should be made in the standards, with the single exception that the avoirdupois pound should be substituted for the troy, as being that in more general use. But though they did not favorably notice the introduction of the decimal system for weights and measures, they spoke strongly in favor of an early adoption by the Government of a decimal coinage.

Although the subject of decimal coinage had been noticed first in Parliament by Lord Wrottesley in 1814, and again in 1824, in 1832 by Mr. Babbage, and in 1834 by General Pasley, yet as this document first called public attention to the subject, it may be called the opening gun of a campaign which raged hotly in England for the eighteen years following; and as the subject of decimal coinage had far the largest share of the decimal discussion, it will not be without interest to include it in our general survey. It is first necessary to remark, however, that in course of time the decimal coinage question became, as it properly is, almost entirely separated from the decimal question in general.

The advisability of a decimal coinage being assented to, the next thing to be considered was the particular scheme to be adopted. There were a dozen or more schemes proposed, each numbering its own adherents and advantages, the chief of which usually claimed was the least possible change from the existing system. Thus, first of all there was the "pound and mil scheme," which retained the pound as the unit, and reduced the farthing from $\frac{1}{960}$ to $\frac{1}{1000}$ of a pound, to be known as a mil. The integrity of the crown, shilling, and sixpence would thus be preserved, while the smaller coins would be obliterated. Then there was the "penny scheme," which decimalized upward from the penny, obliterating all other coins. The "farthing scheme," the "shilling scheme," and the "ducat (=10s.) scheme," were similarly named from the coin retained as a base. The "florin scheme" made the two-shilling piece the base, while the "dollar scheme" proposed either to make the four-shilling piece the base, or to sweep away the existing system *in toto*, and to replace it by that of the United States; and so on. Each scheme was also subdivided into subordinate plans, according to the taste of different advocates.

The only one of these, however, which ever obtained a formal recognition by a governmental commission was the "pound and mil scheme;" which was, in effect, that first proposed by Lord Wrottesley in 1824, and that approved by the commission of 1841. Still, nothing was actually done to carry out their recommendations. But, in 1843, a new commission was appointed, consisting of the six remaining members of that of 1838 (Sir F. Baily and Mr. Bethune were dead), and adding four others, including the Earl of Rosse and the younger Lord Wrottesley. This commission recommended and partially carried out the decisions of their predecessors, and in 1847, on motion of Dr. John Bowring, the first step was taken by the coinage of a new two-shilling piece, which was denominated a florin, and bore on its face the words "one tenth of a pound."

But this step was really of no importance in the progress of the change. It was the second step, the coinage of the cent, which would disagree with all existing coins, that was irrevocable. It was postponed, therefore, until 1853, when, upon a rumor of a large emission of new copper coinage, a majority of the last commission wrote a formal letter to Mr. Gladstone, then Chancellor of the Exchequer, urging that, before anything was done on the proposed coinage, the decimal system should be carefully considered; in response to which Mr. Gladstone, while expressing high esteem for the merits of the proposed decimalization, yet, with a view to a more exhaustive and thorough investigation than had yet been undertaken, begged for the appointment of a select committee on the subject.

A committee of sixteen was now appointed, composed this time, not of scientists, but chiefly of prominent business men, merchants and financiers, and with power to send for persons, papers and records. They reported in four months, appending a large mass of evidence from twenty-five witnesses, several of whom were men of great eminence. Every one of these witnesses agreed as to the advisability of a change, and, what was even more remarkable, they were equally unanimous as to the particular scheme to be substituted. The verdict of the report was, then, the reaffirmation of the pound and mil scheme, already thrice recommended to Parliament; at the same time, however, advising the necessity of extreme caution in a matter of such great moment.

The public effect of this document was electrical. Friends, foes, and neutrals were aroused to interest. "Upon no topic of public interest in England," says a writer of the period,[40] "have been so widely opened the flood-gates of essayism and dissertation; friendly inventiveness grew fertile in succedanea, as if the merit of the system depended upon a capacity for multiform modification; while, on the other hand, hostile criticism was not silent, but rung the changes on the few but plausible motives that summoned defenders for the existing order of things. In fact, it appeared as if, for the first time, those con-

---

[40] *Banker's Magazine*, N. Y., Vol. XV., p. 139.

cerned in the defence considered the crisis to be at all serious." As the discussion continued, the friends of the change, though at variance on every point of method, consolidated themselves into the Decimal Association, headed by Mr. James Yates, M. I. C. E.; Professor A. de Morgan, the mathematician, was also a prominent leader of the movement. This was in 1854.

Nothing farther was done, however, till 1855, when a member of the Committee of 1853 presented resolutions in the House of Commons; first, on the eminent success of the florin, and, secondly, requesting the Government for the completion of the decimal scale; the former was carried, but the latter, upon strong resistance by the Government members, was finally withdrawn upon assurance of more profound and wider investigations. A Royal Commission was, in fact, shortly afterward appointed, headed by Lord Monteagle, one of the earliest and warmest friends of decimal coinage; while on the other side was Lord Overstone (senior member of Jones, Loyd & Co.), who was believed to be an opponent of the change; and in the middle ground was Mr. J. G. Hubbard, M.P., Governor of the Bank of England, who retained his impartiality to the end. Undoubtedly this was one of the ablest commissions ever appointed by Great Britain for any subject; and they examined the subject more exhaustively than it was ever examined before, or has been since. At the end of two years, in April, 1857, their preliminary report was handed in, containing, besides the evidence of seven witnesses, an appendix of 250 pages, of which 150 contained the answers to circular letters of inquiry sent by the Commission to individuals in various foreign countries.

The final report of the Commission was completed just two years later, April 5, 1859, and the final result of these many years of diligent and laborious research—most characteristic of the British nation—is indeed a curiosity. Though the advocates of the decimal coinage fought, one may say, with the energy of despair, and with that fertility of invention which is born of necessity, it became evident, long before the conclusion was reached, on which side it would fall; and the chairman, Lord Monteagle, resigned from the Commission before the report was drawn up. Its conclusions were twelve in number, the most important of which are as follows: 1. Other countries having a decimal coinage afford no example for Great Britain.

2. The inclination to it in Great Britain is not unanimous. 3. It is very difficult to come to any useful conclusion as to the merits of the decimal principle in the abstract. 6. Paper calculations are better performed by decimals; but as to how much better, there may be a difference of opinion. 7. Mental calculations are easier under the existing system. 12. While the weights and measures remain as at present, it is unadvisable to make any partial change in coinage alone."

These twelve conclusions, with a page of introductory matter, complete the whole of this curious document; but it is followed by forty pages of a draft report by Lord Overstone; forty more in smaller type prepared by one of the witnesses; eight pages of a memorandum by Mr. Hubbard; eight pages (in small type) of further remarks by the Secretary; and finally a second appendix containing minutes of evidence produced, etc., etc.

By this report the question of decimal coinage in Great Britain was finally and permanently shelved; the discussion, and the public interest in the subject, died away; and no action has been taken by the Government since. The interest had been intensified by the appointment, by the United States in 1857, of a Commissioner to confer with Great Britain with regard to the assimilation of the currency of the two countries; but this idea, too, was finally dropped from lack of interest. Nay, the delegates of Great Britain to the International Monetary Conference at Paris in 1867 refused even to negotiate in reference to unity of coinage, affirming that "until it should be incontestably demonstrated that the adoption of a new system offered superior advantages . . . the British Government could not take the initiative in assimilating its money with that of the Continent."

Let us now return to the restoration of the lost standards, a task which had been assigned to the Standards Commission of 1843, whose report as regards the decimal system has already been discussed. This Commission carried out the methods recommended by the Preliminary Committee of 1838, and for a detailed account of the operations, which occupied about eleven years, my readers are referred to the able treatise on the subject by Mr. H. W. Chisholm.[41] The magnitude of the operations may be estimated from the fact that, in the case of the standard of

---

[41] "The Science of Weighing and Measuring." Macmillan, 1877.

length, the number of micrometer readings for all the comparisons exceeded 200,000; and, among other things, it was found necessary to construct an entirely new system of thermometers. The credit of this portion of the work (construction of the yard) is largely due to Mr. Sheepshanks; and it should not be forgotten that the scientific gentlemen who devoted so much of their valuable time, attention and labor to so important an object, declined to accept any pecuniary remuneration. The two primary standards, with a number of copies, were completed in 1855, and in the final report recommended for adoption. And it is here to be noted, that the committee particularly recommended that the rules established in 1824 for the definition of the yard as a portion of the pendulum, or a given portion of a meridional arc, should be repealed, and that *the standards should in no way be defined by reference to any natural basis*; experience having proved that, in the present state of science, such definitions were wholly visionary and impracticable. The new standards were accepted, and all the recommendations adopted, in the same year; and these are to-day the standards of the English-speaking world. The same Act of 1855 provided also for new and important duties of the Standards Department.

In 1862 a new Select Committee was appointed by Parliament to consider the practicability of adopting a simple and uniform system of weights and measures. This committee reported, the same year, in favor of the metric system as that most perfectly fulfilling these conditions, of any then in use; and they accordingly recommended its adoption, with this proviso, " that no compulsory measures shall be resorted to until they are sanctioned by the general conviction of the public." The metric system was formally legalized in Great Britain by an act of 1864.

In 1866 a new act was passed, in which the Standards Commission was reappointed as a Royal Commission (headed, as before, by Sir G. B. Airy, and including eight members) to consider and report on the condition of the standards, and the subject of weights and measures in general. They presented, between 1868 and 1871, five comprehensive reports, containing many important recommendations; of which the second report related particularly to the introduction of the metric system. They recommended the substitution of the metric weight for troy weight in the mint, its permissive use in customs and other places, and its general encouragement; but that in no case should compulsion be used; believing that the owners of factories, and others who might desire to use it, could arrange such matters without legislative assistance.

These recommendations were carried out by the important Weights and Measures Consolidation Act of 1878. This act reaffirmed the existing standards; but the number of denominations was reduced, the troy pound finally abolished, and all distinction between dry and liquid measure rejected; at the same time the cental of 100 pounds was sanctioned for grain dealings, and the metric weights and measures again made permissive, and a table appended defining their legal equivalents in imperial denominations. This is the last important step to be recorded on the subject of weights and measures in Great Britain; although there yet remains the Select Committee appointed by the House of Commons on February 13, 1895, "to inquire whether any and what changes in the present system of weights and measures should be adopted." This Committee was composed of seventeen members of Parliament, with Sir Henry Roscoe as their chairman; they reported on July 1, 1895, recommending that the metric system should be at once rendered legal for all purposes of trade and manufacture (a proposition which had already been fulfilled by two separate acts of Parliament), and, further, that *within a space of two years*, the metric system should be adopted as the only legal system. In regard to this extraordinary recommendation, it is only necessary to observe here, that it is in utter opposition to the report of any previous committee; and that the remarkable agreement of the testimony of all the numerous witnesses before the Committee, with a single exception, seems, as in the case of the Committee on Coinage of 1853, to point to something like a foregone conclusion.

The most casual glance at the history of weights and measures in Great Britain can hardly fail to reveal the striking contrast with that in France—the same, indeed, which presents itself in their political history. It has been well said by a historical writer that while *reform*, — the gradual improvement of the existing order of things,—has been the watchword of the English nation, in France the people have been able to effect changes only by *revolution*. In the one country, we see a series of convulsive and intermittent struggles culminating in half a dozen abrupt changes in government, ranging from one extreme to another, in the course of a century, and nearly as many different constitutions; and similarly, with regard to weights and measures, a few spasmodic and desperate efforts toward improvement, followed by long periods of inaction. In England, on the contrary, the long deliberation and the slow, often cumbrous, yet constant movements of the governmental machinery have resulted in more real progress in the science and art of government than has been attained by any nation in Europe, if not in the world. While other nations, anxious to gain perfection at a stride, have hurried from one expedient to another, the steady plodding of the Anglo-Saxon race has placed them far in the lead among commercial nations; and rendered it self-evident that, so far as *language* is concerned, notwithstanding any theoretical advantages which others may claim, and the scorn which may be offered to its uncouth spelling and illogical pronunciation, if any one language is ever destined to supplant all others, the English must be the one. And if the same supremacy which has followed the English language and other institutions does not follow also their system of weighing and measuring, it is at least much too early to predict it of any other.

At the same time we obtain, from the preceding paragraphs, an insight into the probability that Great Britain should ever make, by forcible measures, so radical a change as is implied in the adoption of the metric or a similar system to the exclusion of her own. We see on two separate occasions (1824 and 1878), when such a change had been importunately brought to her notice, that after many years of impartial and exhaustive investigation, she has emphatically chosen the alternative. We see that commission after commission of the ablest men in the kingdom appointed for the purpose have, with a single exception, offered grave doubts as to its practicability or advisability; and none, except the last (whose deliberations lasted but four months), have even favorably mentioned compulsory measures. We see that, even in respect of decimal coinage,—where the advantages of decimalization are universally acknowledged to be more decisive than elsewhere,—after a life-and-death struggle of eighteen years between the two systems, the decimal system has been almost hopelessly defeated. The conclusion of which observations evidently is, that any hope of such action in regard to the metric system as has been raised by its enthusiastic advocates, is perfectly visionary; and those who, in the face of all this, still indulge it, signally fail to read the meaning of history, and to understand the springs of human action. For the action of any nation as a whole is a product of the opinions and preferences, of the mental and physical constitution of the individuals who compose it; and it would be as easy to alter character, as that the current of history should be so completely turned back, as is implied by such suggestions.

United States.

The history of weights and measures in this country is short and simple. The Americans, first to appreciate and to adopt the decimal system for coinage, have always, when the subject of weights and measures has been brought to their attention, felt so overwhelmed by its magnitude and difficulties, that they have never felt able to take any important positive action. It is considerably to our reproach as a nation that, instead of, like England, courageously meeting a problem of increasing importance that would not down, we have always shirked and postponed it. But on the other hand, it is much to our credit that the laxity of the Government has been largely compensated by the energy of private enterprise.

The problem of the coinage has, in the United States as in England, been considered as a subject by itself; more especially so, as it was one of the first on which the confederate Congress was called upon to decide. The United States were then without national currency, and started, practically, with a clean slate. The system which we use to-day was therefore adopted, by one of the first national laws, July 6, 1785; and this currency was first coined in 1792.

But the system of weights and measures was in a far different position from the coinage; for while the nation could not control the different units of the former by exclusive issue, as in the case of the coinage, the problem involved was far more intricate. Nevertheless it was a subject of some concern to Washington; who, though he did not recommend any particular system, repeatedly urged upon Congress the necessity of uniformity. It was noticed in his earliest message to Congress, and again in his first annual message of 1790. In accordance with these recommendations, the first Congress, in January, 1790, requested the Secretary of State, Mr. Jefferson, to prepare plans for establishing the desired uniformity. The report, July 15, 1790, offered two alternatives; one of which was the consolidation of the existing system by reducing the various bases of length, weight and capacity to easy and convenient ratios and abolishing parallel systems, such as liquid and dry measure, troy and avoirdupois weight, etc.; the other proposed an entirely new system, in which every branch was reduced to the decimal ratio. Both systems were based upon a standard of length equal to that of a uniform cylindrical rod of iron vibrating seconds, *i.e.*, a little less than five feet.

About this time, however, news came of the action of France, and a committee was appointed by the Senate to take it into consideration. This committee reported in March, 1791, and the result of their deliberations was that, in view of the universal system already proposed to be established in France, it would be unwise at that time to make any alterations in the existing system. But in the fall of the same year, the Senate again appointed a committee to proceed in the investigation of Mr. Jefferson's plans; and the Committee this time reported in favor of the second or decimal system. The report, however, was "laid on the table," and never disposed of.

The same thing was repeated in 1796, this time in the House, a committee of which reported on April 12, recommending a plan in general conformity with the first of Mr. Jefferson's; and to this end a bill was introduced providing for experiments on the length of the pendulum rod; but on the third reading in the Senate it was postponed till the next session, and so lost.

During the next twenty years several committees of Congress were appointed, but without result. It was not till 1817, when, the subject being again urged upon Congress by President Madison, the Senate referred it to the Secretary of State (afterwards President), John Quincy Adams, to prepare and report to them "a statement relative to the regulations and standards for weights and measures in the several States, and relative to proceedings in foreign countries for establishing uniformity in weights and measures, together with such propositions relative thereto as may be proper to be adopted in the United States."

Two years later, a House committee appointed for the purpose, on January 25, 1819, presented a report, in which they again recommended Mr. Jefferson's first plan, together with important new recommendations regarding the establishing, preservation, and distribution of standards; and offering resolutions for the establishment of a commission for the purpose. Again, however, no action was taken on the subject; but in the following session, on December 14, 1819, the House passed a similar resolution to that of the Senate in 1817, the report of Mr. Adams having not yet appeared.

The celebrated document which resulted from these resolutions, and so often quoted in this paper, did not, in fact, appear until February 22, 1821; but the delay was amply justified by its exhaustive and masterly character.[42] "He examined the whole subject," says Professor Charles Davies, "with the minuteness and accuracy of mathematical science,—with the keen sagacity of statesmanship, and the profound wisdom of philosophy. To that report nothing can be added, and from it nothing can be taken away." It is perhaps the most impartial document ever published on the subject; so much so, indeed, that it is difficult to arrive at his exact conclusions as to the merits of the different courses open to the national legislature. He rather pointed out a way to reach a decision, leaving the latter to others. Nevertheless, the effect of this report was a clear and solemn warning against any ill-considered legislative tampering; and as to the metric system, though he has words of high praise for its theoretic beauty, such as the grandeur of the conception, and the blessings of a future international uniformity, yet it is clear that, hampered as it was by great and fundamental defects, and so radical a change presenting to his mind almost insuperable obstacles, he believed, whatever else might be done, that (to use his own words, p. 120) "*were the authority of Congress unquestionable to set aside the whole existing system of metrology, and introduce a new one, it is believed that the French system has not yet attained that perfection which would justify so extraordinary an effort of legislative power at this time.*" The perfection to which he referred, and of which he had hopes, would, as is tolerably evident, have included first of all a relaxation of the decimal divisions—the idea which Napoleon had, perhaps, intended to carry out, and which had already been temporarily

---

[42] The report contains 135 octavo pages of text, and nearly an equal number of a statistical appendix.

established by the *Système Usuel* of 1812. But these hopes have never been realized.

The effect of this report on Congress was more profound even than Mr. Adams would have wished. It opened to their eyes the whole subject in all its enormous importance and endless ramifications; and the result was—absolutely nothing. More than forty-five years passed before the next step was taken.

Nevertheless, the indisposition of Congress has not acted unfavorably on the commerce of the country; for while every one was left free to use his own unit of length, weight or capacity, the growing industries of the United States have done for themselves better, probably, than the wisest of governments could have done for them: they have seen the necessity of uniformity and have established scales and standards which find their way to all parts of the world. At the same time the lack of positive action by Congress has been more than atoned for by the fact that we have tacitly followed the course of Great Britain, and so to-day preserve that international uniformity, which is of itself an incalculable blessing.

Two acts, however, were passed during this period which might be called suggestions of an effort "to fix the standard of weights and measures," though non-committal in character and designed for special uses. The first was the establishment, in 1828, of a definite unit of weight (the troy pound) for use at the mint,—a condition which had become urgently necessary to a stable and uniform currency. The second was in 1836, and provided that a full set of copies of all the standards of weight and measure, which had been provided by the Treasury Department for use in the Customs Service, should be delivered to the governor of each State. This was accordingly done.

In 1863, by the request of the Secretary of the Treasury, the National Academy of Sciences appointed a committee to consider and report on the metric system. They reported in January, 1866 (not quite unanimously), "in favor of adopting, ultimately, a decimal system; and, in their opinion, the metrical system of weights and measures, though not without defects, is, all things considered, the best in use." They recommended to Congress the permissive adoption of the metric system; and among other things the introduction of the system into the post-office by making the single letter rate 15 grammes instead of ½ oz. (= 14.17 g.).

The former of these recommendations was carried out shortly afterward, by an Act of Congress of July 28, 1866, which ordained that the metric system might be legally used in private or public; at the same time appending a table of equivalents; along with a resolution instructing the Secretary of the Treasury to furnish each State with a set of standards. It is the custom of the metricists[43] to make a great deal of this law, which was, in fact, a mere declaration of the existence of that which already existed; their implication appearing to be, that since Congress has *granted* permission to use the metric system, it may therefore *take away* the permission to use the existing system.[44] They also say that by this law the length of the yard was determined in terms of the metre (although, in fact, it was the reverse); yet for all that, it is to be observed that the yard is no nearer to the $\frac{3600}{3937}$ of the metre to-day than it had been in 1865, but remains identical with that of Great Britain; as also in the case of the pound. And it is a remarkable fact, that although the fifteen-gramme rate was enjoined upon the post-office a few years later, no notice whatever was taken of it by that department, so far as concerns domestic postage; and our scales, official and private, remain to this day graduated in ounces, not in grammes.

But although the law of 1866 established no new principles, it sufficed to draw public attention to the system; the first result of which was the inclusion, in practically all our arithmetics, from the time of the passage of the act, of the metric system with exercises. It has, then, been taught in our schools for the past thirty years.

At the meeting of the University Convocation of the State of New York, at Albany, in the summer of the same year (1866), the Hon. John A. Kasson, chairman of the House Committee on Coinage, Weights and Measures, called the attention of the members to the action of Congress, requesting such attention to the subject as might seem best. Accordingly, a committee was appointed, consisting of the Chancellor, J. V. L. Pruyn, Prof. Charles Davies, and Regent Robert S. Hale, to consider and

---

[43] *Inveniam verbum aut faciam.* I beg that, for brevity's sake, I may be allowed the use of this word, which is of my own coinage. Its meaning is obvious.

[44] A fair sample of metric impudence is the following (*Eng. News*, Feb. 5, 1876, p. 44): "It only remains for the law [of 1866] to be *enforced* to bring that [metric] system into use in the daily transactions of business."

report "what measures, if any, the Convocation should adopt in regard to a uniform system of weights and measures." "It seemed to be the unanimous opinion of the Committee," says Professor Davies, "that a report would be made favorable to the introduction of the [metric] system into general use. On examination, however, it did not appear to the Committee . . . that the convocation should commit itself hastily." But three years afterward, in 1869, the Committee made a partial report, and "explained, very fully, the changes which an examination of the subject had produced," whereupon the Committee was discharged, and a new committee appointed, composed of Professor Davies, Mr. Hale, and Prof. J. B. Thomson.[45] This committee made a very full report, in which, after discussing the various reasons, they declared their belief that the adoption of the metric system, without modifications, would be most unwise. They also recommended that, in order the better to acquaint the public with the merits of the case, their report, together with that of John Quincy Adams and a lecture of Sir John Herschel of a few years before (1863), should be reprinted and published in book form. Their recommendations were formally adopted by a vote of the Convocation, and the book published by Professor Davies.

In 1876, the Franklin Institute received from the Boston Society of Civil Engineers a circular letter requesting their coöperation in the presentation of a petition to Congress, for the purpose of procuring more positive legislation on the metric system. This letter was referred to a committee appointed for the purpose, consisting of Messrs. W. P. Tatham, chairman, Coleman Sellers and Robert Briggs. The report, handed in in May of the same year (signed by the first two members of the committee), after briefly reviewing the historical side of the question, puts forth the reasons why the metric system should *not* be adopted, whose forcible introduction it deprecates in the strongest manner. It is one of the most pronounced documents of the kind which has yet appeared. Mr. Briggs also handed in a minority report on the other side of the question. The former was adopted by a vote of the Board of Managers, and is printed in their *Journal* of June, 1876, p. 278. It was also reprinted by several technical journals here and abroad.

---

[45] Prof. Thomson favored the metric system, and did not act with the Committee.

In 1877, in response to a petition of the Boston Society of Civil Engineers, an important step was taken by Congress. This was to find out the merits of the proposed change from *those for whose benefit it was to be made;* and though only a beginning, it was in the right direction, and, as it happened, all that was necessary in this case. A resolution was passed, November 6, requesting the heads of the executive departments "to report what objections, if any, there are to making obligatory in all governmental transactions the metrical system;" and also "to state what objections there are, if any, to making the metrical system obligatory in all transactions between individuals; and what is the earliest date that can be set," etc. This resolution brought forth 23 replies, of which 6 expressed opinions favorable to the introduction of the metric system, 10 views opposed to it (many of them strongly so), and 7 doubtful or indifferent. Of those favoring it only one advocated compulsory legislation, while several of the others offered objections. The period suggested as necessary for an obligatory change was variously given at 5, 20, 35 and 50 years.[46]

The Secretary of State (Wm. M. Evarts) ventured to remark that "even in those countries, like France, where the system has been obligatory beyond the memory of the present generation, the tradition of the old system clings among the people and defies complete eradication; and that in other countries, like Spain . . . the innovation is practically disregarded by the people, and but partially conformed to by the government, which is compelled to recognize the validity of the old standards."

The Secretary of the Navy said that the change in that department "would probably involve a total loss of all charts and chart-plates now in use," and moreover "prevent that free use and interchange of charts which seems essential to navigators."

The objection of the Postmaster-General was "founded on an apprehension that mistakes and annoyances, and possibly losses, would occur in the practical application;" at the same time necessitating an entirely new set of scales for the whole country.

---

[46] Inasmuch as an account of this symposium has been published in a circular of the American Metrological Society,—in which it is made to appear that *all replies, except two,* were favorable to the proposed legislation (!)—it has been deemed proper to add brief extracts from some of them. They are given in full in Report No. 14, H. of R., 46th Cong., 1st session (1879).

In the War Department, the Inspector-General gave it as his judgment that "the compulsory change from the present system would be inexpedient, as involving a large outlay of money without adequate comparative results."

The Quartermaster-General said that it would very considerably increase the labors of computation, which would be a perfectly useless labor; would infallibly be the source of many mistakes; and would necessitate throwing away all the scales and weights now divided according to the American standards, and substituting new ones. With regard to the obligatory provision he said, "I do not believe that this is within the power of Congress. It will be looked upon by the people as an arbitrary and unjust interference with their private business and individual rights, and I do not think that they will submit to it. It will inflict, if it can be enforced, a great loss upon many, especially upon manufacturers and mechanics whose shops are filled with costly tools, standard gauges, dies and machines, all constructed upon the basis of the foot and inch. . . . To alter all this machinery, to change all these machines, gauges, dies, screws, and other parts of engines, will be the work of years; it will cost millions of dollars. . . . The fact is, that the metre is quite as arbitrary and unscientific a standard as the foot and yard. It is of less convenient length than either of them, and its compulsory adoption would derange the titles and records of every farm and of every city and village lot in the United States; would put every merchant, farmer, manufacturer and mechanic to an unnecessary expense and trouble; and all, it seems to me, for the sake of indulging a fancy only, and a baseless fancy, of closet philosophers and mathematicians for a scientific basis of measures and weights which cannot be found in the French metric system." Then, after giving a list of equivalents, he says, "What will our farmers, citizens, merchants, tradesmen, mechanics, do with these figures? And will they submit to being obliged to reduce acres, feet, inches, pounds and ounces by multiplying or dividing by the above figures? . . . The ciphers and figures 0.00000073 convey no idea to a mind trained in the English and American system, and yet such combinations are common in French works of science and mechanics."

The Surgeon-General urged strong objections against the adoption of the metric system by the Government only; while as to its general compulsory adoption he said: "If its advantages are so far counterbalanced by its disadvantages, that its use having been legalized, the people will not employ it of their own accord, its enforced introduction would be a great public wrong."

The Commissary-General declared that "even with the most thorough preparation, the change, when made, will bring with it almost inextricable confusion and well-nigh intolerable inconvenience."

The Paymaster-General, while fully favoring the eventual adoption of the metric system, uttered grave warnings against any untimely legislation.

The Chief of Engineers remarked: "It is to be borne in mind that there is nothing in the proposed change which will in any way favorably affect the usual course of private business in this country, and that the demand for a change does not come from business men, but is made in furtherance of a project designed for the general public good in international intercourse."

The Secretary of the Treasury (John Sherman) was "of the opinion that it is not advisable to make the metrical system of weights and measures obligatory in any transactions at present. . . . I think great confusion, many inconveniences and much litigation would arise from its hasty adoption. Congress might properly, in any revision of the tariff, adopt this system; . . . but even this change would create some embarrassment, and is of doubtful utility."

The Superintendent of the Coast Survey reported: "It is certain that very few adults now living would ever become familiar with the merits of the metric system, but would retain the habit of reverting to the *foot*, the *pound*, and our other units, mentally, at least, even after the law had disfranchised the present units. The problem of a change of the kind proposed in a great commercial, agricultural, and manufacturing country like our own is vastly more difficult than it would be in nations the larger portion of the inhabitants of which deal only in a limited manner with small quantities. The subject has been a matter of much thought to myself for several years, and the more I have heard it discussed the more convinced I have become that a matter so grafted into the daily habit and thought of the whole people can only be changed by, as it were, the slowest absorption, and that not less than thirty-five years will be required to effect even a semblance of a change, after the date of the law fixing a time when the new system shall be compulsory."

The Inspector of the Weights and Measures (J. E. Hilgard) replied, as regards the Coast Survey Department, that "the exclusive use of metric units would deprive the charts of much of their usefulness; . . . the result would be that every one would use the British reproduction of the same." As regards customs, "to require invoices in the customary units to be transformed into metric units, as would be implied by the 'obligatory' use of the latter, appears to serve no useful purpose except that of propagating the metric system to the great inconvenience of everybody concerned. . . . Until all nations use the same language and the same money, but little is gained in the way of unification of values by making the units of weight and dimension alike." After giving some trenchant examples, he proceeds: "It is indeed difficult to see how an obligatory statute could be executed in this country. We would hardly undertake to suppress the use of the inch, pound, and gallon by penalties, as has been done under the parentally despotic governments of Europe, where, as in Prussia, fine and imprisonment followed the possession of the old standards. It may even be considered doubtful whether the legal mind of the country would approve a statute decreeing that only contracts made in terms of the new standards could be enforced by the courts, since it *would violate the principle that any agreement made in good faith can be maintained at law*, a principle far more important than conformity in weights and measures with other nations." (Italics mine.) After discussing the matter in detail, he concludes, "It is the foregoing and similar considerations which lead the undersigned to doubt whether the international units of measure will ever wholly take the place of all others in our domestic transactions."

The Department of the Interior is no less pronounced. From a detailed analysis of the effects and practicability of the change in land measurement, the Commissioner of the Land Office concludes that "the effect will be to increase its labors and expenses, and to cause great inconvenience to the public for many years to come, and these embarrassments seem to be unbalanced by any corresponding advantage." The Commissioner of Patents, also, finds the change sufficiently difficult in general, "but for real estate transactions impracticable and not to be considered."

"The existing law," he says, "makes the use of the metric system permissible. Those who find it to their advantage do and will employ it. But I would not advise legislation further." As regards the intrinsic merits of the metric system: "The mind does not readily vault over the wide intervals that the decimal system demands. Hence, while from the nature of numerical notation the use of a decimal system facilitates calculation, its advantages over others in all practical operations are subject to question, and until these advantages have been most emphatically demonstrated, I should be slow to recommend that the use of the metric system be made obligatory upon the American people. Our commercial transactions, other than domestic, must always be largely with other English-speaking people who use the same systems with ourselves, and I cannot believe it advantageous to make such a radical change as this resolution suggests, except with the concurrence and concerted action of Great Britain and her colonies."

These recommendations of the executive have served to put an effectual quietus on any further action by Congress, which has lasted up to the present time. The silence was broken, so to speak, only by the occasional presentation of somebody's bill for a compulsory law, some petition or memorial, and by frequent reports of the standing Committee of the House on Coinage, Weights and Measures,—reports which have been always favorable to the metric system and always couched in a partisan spirit.[47] Our national legislature has never been permitted by its committee to see more than one face of the subject of weights and measures; the other (as we often find it necessary to do in the education of the young) has been studiously suppressed, with the usual good intention. Meanwhile our own system of weighing and measuring has been left to take care of itself, and the Committee have endeavored not to remove, but to heap ridicule on its defects, and thus not to ameliorate, but to discredit, the whole system.

In 1890 Secretary of State Blaine asked the favorable attention of Congress to the resolution of the *Pan-American Congress* in favor of the metric system, asking that it be used in the customs

---

[47] This committee has even favorably discussed an alteration of our system of coinage; not because it is inconvenient, but because it is "unscientific;" that is, because, forsooth, the weight of gold which its unit contains is not exactly equal to a round number of French "grammes"!

service. The Secretaries of the Treasury in 1890, 1891 and 1892 made the same recommendation in their annual reports; and in 1893 the Secretary of the Treasury issued a bulletin announcing that the metre and kilogramme standards which were the work of the International Bureau (p. 545), would be regarded by the office as the fundamental standards. In 1895 Congressman (now Postmaster-General) Wilson introduced and carried in Congress a resolution constituting the Secretary of the Treasury, the Director of the Mint and the Superintendent of the Coast and Geodetic Survey a Commission to inquire into the metric system and report at the following session. They did not report, but wrote letters to the Committee on Coinage, Weights and Measures in its favor; so also did the Supervising Surgeon-General of the Marine Hospital Service and the Chief Clerk of the Bureau of Statistics, of the same department, the Secretary of Agriculture, the Postmaster-General, and the Director of the Bureau of American Republics. The Secretary of the Interior replied to the Committee in opposition to any adoption of the metric system, and the Director of the Geological Survey and Commissioner of the General Land Office favored only a limited application. These letters are appended to the Report of the Hearing before the Committee, of January 30, 1896. No replies from the other departments are given.

There is nothing further of importance to record (except what will be discussed in the next section) in the American history of the subject; but I must be allowed to mention briefly the action in Congress during the last session, not only because it was the original occasion of the present paper, but because it has an important bearing on events which may presently transpire.

On December 26 last, a bill was introduced into the House of Representatives for "legalizing" the metric system (or rather for disfranchising that now in use), and was referred to the Committee on Coinage, Weights and Measures. The latter reported on March 16, submitting a substitute bill, together with the usual recommendations on the subject. The new bill (practically the same as the old) provided, essentially:

"1. That from and after the first day of July, 1898, all the Departments of the Government of the United States, in transaction of all business requiring the use of weight and measurement, except in completing the survey of the public lands, shall employ and use only the weights and measures of the metric system.

"2. That from and after the first day of January, 1901, the metric system of weights and measures shall be the only legal system of weights and measures recognized in the United States."

This bill was debated on April 7, its original promoter and the chairman of the House Committee speaking for it, and members from New York, New Jersey, Virginia and Illinois speaking in opposition; and on April 8 it was recommitted, with an amendment, to the same committee, where it still remains, to be brought forward again at the present session. It should be added, however, that just before the close of the last, a resolution was introduced in the Senate, for collecting and printing "for the use of the Senate all obtainable information on the subject of a metric system of weights and measures," which resolution was referred to the Committee on Printing.

A number of technical bodies have expressed their opinions on the metrical system, some one way, some another; these will be referred to later on. Of petitions, memorials, etc., which are on hand *ad libitum* the year round, for any cause with a semblance of merit, I need not speak at length.

Progress of the Metric System.

This is a subject so often brought to our notice as almost to seem trite. I need not dwell long on its details. The list of countries which use, or are supposed to use, the metric system, we know almost by heart; as well as those that do not, for they are conspicuous by their absence.

The Low Countries, which were early identified in their fortunes with France and each other, scarcely need separate mention. Of these, Belgium was a part of the French Republic from 1792, and shared her fortunes, metrical and otherwise, under the Consulate and the Empire. The conquests of Napoleon spread the metric system through the nations of Europe; all of whom threw off the system on the collapse of the Empire, except Holland, which at the same time became united with Belgium; and royal decrees in 1816 and 1817 fixed the system upon the two countries. They may, therefore, be said to have accepted rather than adopted that system, under a combination of circumstances. But Belgium found it necessary to pass a new compulsory law in 1855, and Holland in 1869, the latter making the use of the metric terms obligatory from 1880.

In 1835 a number of the Swiss cantons found it necessary to consolidate their weights and measures, which differed among each other in every canton; and while doing so, they established them so as to form easy ratios with the metric system; thus the foot was made equal to $\frac{3}{10}$ of a metre. They also established decimal divisions. No law in regard to the metric system was passed until 1868, when it was made permissive by law. A law of 1875 made its use obligatory from January 1, 1877, and a further law was passed in 1880.

The first country to adopt the metric system was the kingdom of Greece, in 1836, but under what conditions I am unable to learn. It is, however, said to be obligatory in that country.[48]

Following this came the action of Chili, where it was "introduced" in 1848, but the introduction did not lead to a more intimate acquaintance. In 1862 the President decreed that it should be used for customs purposes after January 1, 1863. It has never, to my knowledge, been made obligatory for general use in that country.

In Spain it was also introduced in 1849, and made compulsory in 1855 and 1859; but it had to be done over again in 1880, when the colonies also were included. Portugal shortly followed Spain in its first metrical law (1852), though it was not made compulsory till 1868. Then follow a number of South American States; Colombia, in 1853, ordering the use of the metric system in *official* transactions January 1, 1854; but the system is only permissive for private persons, as in Chili and the United States. Ecuador in 1856 passed a law making it legal from 1866; but changed its mind in the following year, ordering it to be obligatory in all transactions. President Commonfort of Mexico ordered its introduction in 1857; requiring that six months after date of the decree it should be exclusively used in all government transactions, and from January 1, 1862, by everybody. But as the government paid no attention to this order, a new decree was issued to the same effect four years later. However, as this decree had no more effect for private working than the former, an *imperial* decree was issued in 1865, again ordering the exclusive use of the metric system. This use is now said by the metrical advocates to be "extending."

---

[48] Strangely enough, Mr. J. W. Nystrom, writing in 1876, numbers Greece among the only four European countries which have not adopted the metric system. And in 1890, Prof. B. A. Gould referred to Greece in the same manner (*Jour. Assn. Eng. Soc.*, Vol. IX., p. 285). And "there are others." I suppose this is on account of the difference of opinion as to what constitutes adoption.

In Guatemala and Costa Rica[49] the metric weights and measures have been "legally in force" since 1858, but it is certain they are not used, and I cannot learn that any attempt has been made to make them. In Uruguay they were legalized in 1862, and are in use for customs. The Argentine Republic adopted the metric system by a law of 1863, and in 1872 ordered its use in the custom-house; in 1877 a law was passed making it compulsory for general use at the end of ten years. In Venezuela, also, the system has been legally in force since about 1864, but this need scarcely be mentioned, as even the new tariff of 1867 used the earlier system. In 1869, however, the metric was made obligatory for customs after 1872; farther than this it has not been carried. Peru had long before ordered the use of the metric system, but the order had no effect until 1869, when a new decree was issued, and it began to be used for customs purposes.

In Italy the first really serious effort was made to oblige the use of the metric system by individuals. This was when the country was united into one government in 1861, and the law took effect over most of the Italian States in 1863, and in Venice in 1869. Denmark in 1863 made the commercial pound equal to 500 grammes, which is the only action (except in regard to coin-weights, which I do not here include) that country has ever taken in the matter. A bill for compulsion failed there in 1876. The permissive laws of Great Britain and the United States have already been mentioned.

It was in Germany that the most important step was taken. At the time of the formation of the Empire, the weights and measures of the various states were in the most hopeless confusion. The North German Union partially corrected this by a law of 1868, making the metric system compulsory January 1, 1872, which was afterward extended throughout the Empire. Germany was followed by Austria-Hungary, which in July, 1871, made the metric system obligatory in four and a half years from that date.

Turkey passed a law (if that is the proper expression), introducing the metric system, in 1869, which went into effect for all official purposes of the empire in 1871, and three years after made its use obligatory to the public.

In Brazil a law was passed in 1862, allowing the use of the metric system on ten years' trial; but on September 18, 1872,

---

[49] These countries, besides Honduras and Salvador, have recently passed new laws, and it is said they now use the metric system in official transactions.

without any previous notice, a decree was issued making it obligatory the 1st of July following, with six months' grace for the execution of the decree. This progressive country, which, as we here see, is "advancing with rapid strides," has found a period of ten to fifteen months sufficient for making this and other equally important changes, and the friends of the metric system do well to point with pride to its example.

In Canada a permissive law was passed in 1873. In Egypt the use of the metric system was "ordered" in 1875, but got no farther than the order. Yet Egypt is commonly classed with the metric countries.

In Roumania, a royal edict of 1874 charged the government with the introduction of the system, but nothing was accomplished till 1884, when it became compulsory. In Servia it was introduced in 1880.

The last important countries on the list are Sweden and Norway. These countries, after an attempted decimalization of the existing system, gave it up, and in 1875 adopted the metric system, which was made obligatory from January 1, 1883. The Grand Duchy of Finland has made the metric system compulsory from January 1, 1892.

I may be permitted to pass by countries like Hayti, San Domingo, Madeira, etc., which serve to swell the list of names, but not the population.

In Russia, the first step was taken by Peter the Great, who, returning from his celebrated trip to England, brought back with him, among other things, the English foot. He did not make any foolish and useless attempt to supplant the measures already in use, but adjusted the *sagene* to equal seven feet. This made the Russian measures commensurable and easily convertible with the British measures. This was two centuries ago, and since then the use of English linear measure has become quite common in Russia. The use of the metric system in customs was authorized in 1870. In 1876 a commission was appointed to visit Paris and inquire as to the metric system, and they reported in favor of adopting it. The government, however, did not act on this suggestion. The dictum of her officials has always been that she would adopt it when Great Britain does. It is used, however, for some scientific purposes, and in some few, perhaps, of the manufactures.

No country of importance,—unless Finland is so considered,—

has adopted the metric system for the past twenty years.[60] Neither Russia, nor Great Britain, nor any English-speaking country has ever adopted it, or made it anything but permissive, which permission in those countries already existed.

As, however, it is commonly asserted that *India has* adopted the metric system, it may be well to mention the facts; for which I refer to a letter of Mr. F. G. Brook-Fox, published in *Nature*, January 9, 1896, p. 222. In 1870 the government of India, in the council of the Governor-General, passed an act for the introduction of the metric system; but this act was vetoed by the Secretary of State (the Duke of Argyll) and *his* council, whose assent was required. In the following year a *permissive* bill was passed, and, like other permissive bills, has remained a dead letter.

In the year 1870, on invitation of the French government, an International Standard Convention was held in Paris, for the purpose of revising the standard units of the metric system. (It was this convention which decided to adopt the standards of the French archives, in place of those given by nature.) It resulted, in 1875, in an agreement, signed by seventeen countries (including Russia and United States, but not Great Britain[61]), forming the International Bureau of Weights and Measures. But as the history of this Bureau pertains rather to metrology than the metric system,—advocates and opponents of the latter alike participating,—it will not here be discussed.

In 1888 Congress authorized the President to invite the American nations to a conference, whose principal objects were the formation of an American Customs-Union, and the adoption of a uniform system of weights and measures. This was the well-known *Pan-American Congress* of Secretary Blaine. It was, however, productive of no result.

In 1895, on November 20, a deputation of forty-six English

---

[60] No, I have not forgotten Bulgaria. Bulgaria was a Turkish province for seven years after the metric system was introduced and four years after it was made compulsory there. If the authorities have found it necessary to excommunicate anew the old measures within the past year, it is not because it had not been done several times before. Turkey also solemnly "made the metric system obligatory and exclusive" in 1895. Roumania and Servia would seem to belong in the same category as Bulgaria, so far as the first Turkish law is concerned.

[61] Great Britain subsequently (1884) joined the Bureau, in order to avail herself of its superior facilities, and under the stipulation "that Her Majesty's Government desire to guard themselves in the most explicit and formal manner from the admission . . . . of any intention of adopting or proposing the adoption of the metric system in this country." (*Jour. Assn. Eng. Soc.*, Vol. V., p. 269.)

Chambers of Commerce, headed by Sir Henry Roscoe (Chairman of the late Parliamentary Committee), waited on Mr. Balfour, First Lord of the Treasury, to urge on the Government the desirability of adopting the metric system. Mr. Balfour replied to them, that while strongly advocating the change himself, and believing that " the solitary argument which appears to have been alleged on the other side is that the existing English system is a good gymnastic for the mind," he hardly thought that the Chambers of Commerce, or even the trades-union congresses, are adequate representatives of the kind of feeling which would probably animate the great mass of small retail dealers, and those who buy their goods from such dealers, who would suddenly find all their familiar landmarks swept away and unfamiliar things put in their places. He therefore believed that the proper field for exertion was not in legislation, but in the energy of private enterprise.

Five of our State legislatures have moved for the introduction of the metric system by Congress; New Hampshire in 1859, Maine in 1860, Connecticut in 1861, Massachusetts in 1876, and Utah in 1896. Massachusetts, Connecticut and New Jersey have required it to be taught in the primary schools.

As regards progress of the metric system by private initiative, there is practically nothing to record, except in the field of pure science, where the metric system had driven out all others long before the governmental action of the different countries. But in practical life, and in applied science, technology, etc., the metric system has never made any progress. It was adopted in 1868 by the American Watch Company of Waltham, Mass., in the manufacture of watches; as it had been adopted years before, as an experiment, in one department of their factory, by the firm of Wm. Sellers & Co., of Philadelphia. It has also been adopted by the American Watch Tool Company of the same place, and by the Solvay Process Company, of Syracuse, N. Y. I also hear that an English machine-shop adopted it about twenty years ago, and one in New Jersey. But apart from these instances, and perhaps a few similar ones which I have not stumbled upon, the metric system has gained no admittance whatever into the workings of daily life, in any country, not even after many years, but by legal compulsion,—a fact which, of itself, ought to warn even its advocates that there are, at least, two sides to such a question.

II. ARGUMENTATIVE.

The arguments adduced for the superiority of the metric system are specious and plausible enough; and the saying which we so often hear is not without a grain of truth, that "it would be *superfluous* to enter into all the advantages possessed by a decimal over a duodecimal or octonal system, for these will be *evident* to all that have given the subject a *moment's* consideration."[52] It is a fact to be regretted, that most of those who write and speak in favor of the metric system appear to have given the subject no more than this; for it is only the maturer judgment, formed from a careful review of experience, that leads to a realization of its *dis*advantages. Let us first discuss the abstract claims for superiority of the metric system; after which we will consider those drawn from history, and from the present status of affairs (commercial, etc.); and finally, the matter of a change from one to the other, on the part of the United States of America.

The first argument for the superiority of the metric system (being that for which the greatest labor was undertaken, and on which, in the address to the National Convention in 1799, the greatest stress was laid) is the fact that its base is the exact ten-millionth part of the quadrant of the earth's meridian; this constitutes being a scientific basis. This argument, and the obvious reply thereto, are so very trite that I ought, perhaps, to apologize for even mentioning it to the members of this Society. Yet so long as the metre could maintain this boast (although as a means of verification it had long since been discarded), there did not seem to be any reply to it, because other units were not the aliquot part of anything in nature. But to-day it is at length universally acknowledged, as it was by the International Convention of 1870, that the metre is not what it claims to be; the last opposition to this acknowledgment disappearing in 1889;[53] and the argument, therefore, such as it is, no longer properly obtains. Both Mr. Airy in England and M. Schubert, a Russian astronomer of great eminence, have pointed out specifically the extent of the error.[54]

---

[52] W. W. Hardwicke in *Longman's Magazine*, Vol. X., p. 517. (Italics mine.)

[53] With the decease of President F. A. P. Barnard, D.D., LL.D.

[54] This, it will be remembered, is just what was predicted by Lalande in 1790; and his advice (quoted on page 496) ought to be instructive reading to the successors of those who neglected it.

But "it is enough for our present purpose to know," says Professor Davies, "that the science of the world has not accepted the quarter meridian as having a *fixed value*, and that the ablest minds in England will probably not so accept it." It is not probable that any two meridians, or even any two quadrants of the same meridian, are of exactly equal length. It has been demonstrated that the northern and southern hemispheres, as well as the eastern and western, are unequal. "A more serious objection," says Sir John Herschel, "is the choice made of the circumference of the meridional or generating ellipse of the terrestrial spheroid in preference to its axis of revolution. This is a blemish on the very face of the system—a sin against geometrical simplicity." According to him, the inch is just as scientific and natural as the metre, being almost as near to one five-hundred-millionth of the earth's polar axis as the metre is to one forty-millionth of the meridian.

But of what imaginable consequence can it be to any one, what ratio the unit of length bears to the dimensions of the earth or to any other physical magnitude with which the life of mankind has nothing to do? By what refinement of scientific fancy can such relation be deemed to constitute a natural standard? The mere fact that such a plea is urged, as it constantly is even today, is sufficient evidence that the advocation of the system does not come from those who have to do with practical affairs, and on whom rests the prosperity of nations. This scientific, or rather pseudo-scientific, craze for round numbers where they are not needed is fittingly exhibited by a practical example. The standard gauge of railroads in most countries is uniform, and equal to 4 feet 8½ inches. This number would probably look better were it exactly 5 feet; but this is of no consequence whatever either to those who lay the tracks or those who ride over them. But, with characteristic perversity, the French engineers have attempted, with partial success, to destroy the existing uniformity in order to introduce a more *scientific* gauge of exactly one metre. In India, for instance, a new country, the uniformity was complete; and the disgust occasioned by this wanton destruction of it led President Hawksley, in his address before the Institution of Civil Engineers in 1872, to say some severe things about the metre. "One of the worst founded and most perplexing measures of length," he declared, "with which it has been my fortune to become acquainted. A measure which bases its claim to universal acceptance on the intangible ground that its length is, by its own unprovable assertion, exactly one ten-millionth part of a quadrant of the earth's equatorial circumference!"

Another and important example of this craze for a *natural standard* is represented by the centigrade thermometer, which, besides containing exactly 100 degrees between the freezing and boiling points of water, has "its zero at the freezing point—the only invariable point of temperature in nature," etc.[55] Although this last clause is enigmatical, I may, perhaps, be permitted to suggest that, if we are to have a sentimental zero to the exclusion of convenience, it might be as well to have it at the "absolute zero," which would preclude, at least, the use of negative signs. Into how many degrees the scale is divided can be of no possible consequence, provided they are of convenient size. But the disadvantages of the centigrade scale are best told by Mr. W. A. Hazen of the United States Weather Bureau, who was led by the recent agitation to express his opinions on this subject. He says, "The metric system usually carries with it the centigrade thermometer, and here the whole English-speaking world should give no uncertain sound. In meteorology it would be difficult to find a worse scale than the centigrade. The plea that we must have just 100 degrees between the freezing and boiling points does not hold; any convenient number will do. The centigrade degree (1.8 degrees Fahr.) is just twice too large for ordinary studies. The worst difficulty, however, is in the use of the centigrade scale below freezing. To average a column of thirty figures, half of which are minus, takes nearly double time that figures all on one side would take, and the liability to error is more than twice as great. I have found scores of errors in foreign publications . . . all due to this most inconvenient minus sign. If any one ever gets a 'bee in his bonnet' on this subject, and desires to make the change on general principles, it is very much to be hoped that he will write down a column of thirty figures half below 32 degrees Fahr., then convert them to the centigrade scale and try to average them."[56]

The metre, as has many times been remarked, is really as arbitrary a standard as the foot. The only real thing about it is the

---

[55] *Banker's Magazine*, New York, Vol. XI., p. 606.

[56] *Nature*, January 2, 1896, p. 198.

rod in the public archives. Professor Joseph Henry, who, as an electrician, might be considered to speak from experience, said: "The only objection to the foot, which has come down to us from the days of ancient Egypt, is, that it is an arbitrary measure and cannot be verified by comparison with any fixed magnitude in nature. But in this respect the metre has no advantage. It is highly important to the advance of humanity that a uniform system of weights and measures should be introduced throughout the civilized world. But the realization of this proposition is a matter of intrinsic difficulty, which has been much increased by the unfortunate attempt to introduce the French metre as a standard."[57] "The metre was adopted in France," says the Report of the Franklin Institute in 1876, "only because the harmonious proportion between the metre and the length of the meridian would bring all local measurements into harmony with the measurement of the world. But the decimal division of the quadrant and of time having been abandoned, and the adopted length of the metre having been found incorrect, there remains not even the sentimental reason for adopting it as our unit of measure."

The second argument in order of importance (following the address of Laplace before the Convention) is that of *uniformity*. Against uniformity in the abstract, nothing, of course, can be said. But the metricists proposed that "the weight and dimensions of every material thing, whether solid, liquid or gaseous, whether on land or on water, whether on the earth or in the heavens, and whether determined by the scale, plummet, balance, and barometer or thermometer, are ascertained by a method absolutely uniform, entirely simple, resting upon a single invariable standard, secure against the possibility of change or loss by being constructed on scientific principles," etc., etc. They insisted that everything must be bound by bars of iron, or of platinum, to adhere to this wonderful standard. And what is the result? The result is that the diameter of the earth's orbit is, not two astronomical units, but 300,000,000,000 metres. That a wave-length of light is not $\frac{1}{50000}$ of an inch, but 0.0000006 metres. That long rows of ciphers on either side of the decimal point are necessary to express the commonest quantities of daily life. That the architect can no longer use a scale of $\frac{3}{8}$ of an inch to a foot, nor the engineer of 10 feet to an inch; but they must use instead

---

[57] See letter published in *Banker's Magazine*, N. Y., Vol. XXIV., p. 161.

0.015625 and 0.0083$\frac{1}{3}$. That our maps are no longer on a scale of $\frac{1}{20000}$ or $\frac{1}{60000}$, but of 0.00005 and of 0.0000166$\frac{2}{3}$. That the workman can no longer buy a half or a quarter of a pound of coffee; he must buy 0.25 or 0.125 kilogramme. That no one is any longer to be allowed to imagine a sixth, or even a thirteenth of anything; he must mentally express it as 0.16666 or 0.07692. That no one, in fine, should be allowed the use of any other length than the *metre*, any other volume than the litre, any other weight than the kilogramme. Yet the only answer that we hear to this is that the metre is "just as convenient as the yard." Very true; we have the yard, and we do not use it. We may use tenths of the yard, if we wish, but we don't want them. We have also the third of a yard, which we do use, because it is more convenient; we have tenths and twelfths of the foot, but we generally use the latter; we have tenths and sixteenths of the inch, but we use the sixteenths, except in a few cases, where tenths are more convenient. Each of us may, if he choose, bind himself by a vow to use but one measure and one mode of division in all cases and for all purposes; but why should he insist in compelling others also to adopt his private ideas?

It is the general verdict of engineers that the metre is *not* a convenient measure for the majority of purposes. On almost every occasion they have so expressed their opinion. It was said by Mr. Arthur Hamilton-Smythe, in his paper before the Institution of Civil Engineers, in 1885, that a workman could measure a distance with a metre rule in two-thirds the time taken by a two-foot rule. This was denied by Mr. W. W. Williams, from his experience with foreign workmen, who, with a metre rule, were generally longer and less accurate than Englishmen with a two-foot rule; besides which (he said) another workman was generally called in to put a mark at the end. But no argument, after the fact of our own practice, and that of the whole world when left free to choose for themselves, is so conclusive on this point as the incident related on this occasion by Mr. E. B. Hanson, who visited Paris in 1878, and some shops there, "where several young artisans were being taught under the French Government, and he was astonished to find that they were using the two-foot rule; on asking the reason, he was told that it was found to be *so much more convenient.*" So, too, the Germans and French both use the pound, in defiance of legislative restriction; and they divide it up as they please. To make a change from the yard to the metre, simply because the metre is just as convenient, would be, as Sir John Herschel said, "a standing reproach and anomaly,—a change for changing's sake." But to change because the metric system allows of but one unit of length for *all* purposes, would be far worse; it would be a retrograde movement, whose results, if it were possible to follow it out in all its provisions, would be most deplorable.

The metricists have, in fact, committed just the mistake that we should have expected of theorists, and just the one a manufacturer would commit, for example, if for the sake of uniformity he were to allow his blacksmiths to use but one size hammer, his carpenters but one size saw, and his machinists but one size file, or insisted that the sizes should be related to each other only in the ratio of ten. "The mechanic," says Dr. Coleman Sellers, "selects his tools in accordance with the extent of his work, and doesn't waste time driving at a railroad spike with a tack-hammer."

Another advantage, of which much is made, of this vaunted uniformity, is the fact that the unit of volume is equal to the unit of weight in water. This is undoubtedly a convenience; it formed the foundation for the connection of the English and ancient units of weight and measure; but in order to appreciate how great this convenience is, we must read the words of a certain learned professor on this subject. "A French engineer," he says, "has instantly the weight of a stone or structure of masonry when he knows its volume or its specific gravity; whereas the English engineer has to reduce his measure of volume to cubic feet and fractions of the same to multiply them by 62½ (roughly speaking), and the product by the specific gravity of stone."[58] How many are there of us who remember the specific gravity of stone, or iron, or any common material, with sufficient accuracy to make a calculation? Yet we all know perfectly well that cast iron averages 4 cubic inches to the pound, and copper or gun-metal 3; more exactly 0.26 and 0.32 pounds per cubic inch (which are correct to ¼ of 1 per cent.). The fact is that, in these days, we never use specific gravity tables except when we use the metre and for special cases of hydraulics. But where this relation would be of most value, viz., in naval construction, its advantages are vitiated by the fact that it does not hold for sea-water. Indeed, a candid friend of the metric system has expressed him-

---

[58] *Jour. Frank. Inst.*, Vol. XCIV., p. 278; October, 1872.

self that it is crude and unscientific. "The practice has usually been to select some particular substance . . . and adopt it as a standard. . . . An example of the persistent use of this principle is to be found in the still common mode of expressing the density of matter, by referring it to the density of . . . water. . . . It has taken some years for even scientific men to fully appreciate the objectionable features of this sort of metrology, because it has required some time to prove that the conditions under which the density of water is constant are difficult of realization."[59]

The argument of uniformity, however, loses much of its importance when applied to English-speaking countries. Their system is already uniform, and was so, practically, decades before other countries had even considered the subject. It is the result of long years of painstaking deliberation and effort by the world's greatest men, joined with the constant exertion and ingenuity of the enormous industrial interests of the leading commercial nations of the world. It is not the result of a few months' deliberation of a half-dozen noblemen who never even bought their own groceries, nor of a whim of some "benevolent despot," nor of a decree of some lazy one who had neither time nor talent to take the bull by the horns. Yet even those countries which have adopted the metric system had far more reason than we. They had allowed the methods of weighing and measuring to run into such a hopeless tangle that they might be largely excused for grasping at the only straw which seemed to offer any hope of salvation.[60] They were divided into a large number of jarring states which a strong hand scarcely held together, and which any preference shown to one of them would have sufficed to scatter again. But even so the British inch has maintained its own; it has not been displaced by any metrical unit, but, on the contrary, has displaced them, in total despite of uniformity—for the inch and the metre are incommensurable.

---

[59] T. C. Mendenhall in *Transactions A. S. C. E.*, October, 1893, Vol. XXX., p. 120.

[60] Thus in France in 1790, according to Prince Talleyrand, there were 13 different *pieds* (feet), 18 different *aunes* (ells), 21 different *poids de marc* (avoirdupois pounds), 24 different *boisseaux*, 17 different *sacs*, 23 different *septiers*, 13 different *tonneaux* (tuns), all legal; this was "only a much abridged statement of the principal differences between the weights and measures of the kingdom." In Germany and Austria it was as bad, and in Italy much worse.

ering how far it should be extended, or where it finds its boundary in the nature of things and of man, enacts laws inadequate to their purpose, inconsistent with one another; sometimes stubbornly resisting, at others weakly yielding to inveterate uses and abuses; and finishes by increasing the diversities which it was his intention to abolish, and by loading his statute-book only with the impotence of authority, and the uniformity of confusion."

Let us now consider the *third* argument in order of succession (still following Laplace), but far the most important in fact, viz., the *decimal divisions*. These divisions constitute, in the eyes of its advocates, the most brilliant superiority of the metric system; but to my mind its most fundamental and irremediable defect. The advantage of the decimal system of measures obviously is, that so expressed, quantities conform to the arithmetical scale, and so dispense with any other. That this advantage is a great one in many cases, so long as we retain our numerical base, is what cannot be doubted; but it is far more than counterbalanced by the inferiority of that number as a base for subdivision. "If the measurements of the weights and the dimensions of substances," says the Franklin Institute Report, "were only to serve as data for complicated calculations, the reasons for adopting weights and measures decimally divided would have controlled the practice long ago. . . . But the fact is, that the vast majority of weighings and measurings are followed merely by mental calculations, or by a simple multiplication of quantity (whole or fractional) by price (in decimals), a process which can oftener be done by vulgar fractions more easily than by decimals."

It is in the first place to be observed, that if we desire an entirely decimal system, we can have one to-day, and we could and would have had one long ago, equally as good as the metric system, in our own. Starting with the foot, and decimalizing upwards and downwards (as is in fact done in surveying), taking the cubic foot as the unit of capacity, and remembering that it contains a *kilo-ounce* of water (just as the litre contains a *kilogramme*), we have a system possessing all the advantages of the other, with this added convenience, that we could still have our folding two-foot rules, and that the ounce is a more rational size for a unit of weight than the gramme, which is quite too small for commercial uses. But we have no need for such a system; it would be a millstone about our necks, as it is of those who against their will are forced to use it. The accusation that we, the most practical of nations, have not adopted the decimal system because we are too *lazy*, or too *prejudiced*, ridiculous as it is, is sufficiently answered by the fact that in the few cases where we find decimal divisions most convenient, we invariably use them.

Take the case of pure science. The science of the whole world had adopted the metric system long before they were either compelled or permitted to do so by law, and why? Because, not only in science, more than anywhere else, it is necessary to have a universal system, no matter what, but because in precise measurements round numbers cut no figure; and if the base of notation had been eleven, it would have served equally well as a base for a scientific system. For the same reason, namely, universality, the languages of science are the Latin and the Greek; but does that form a reason why we should be compelled to use Latin and Greek in common life, for the sake of universality?

There is no case where the advantages of decimals show to more advantage than in moneys, where the principal operation is the addition of long rows of figures. The two great commercial nations of antiquity, the Greeks and Romans, both understood the advantages of decimal coinage, and had systems, except in the value of the unit, identical with our own; yet though the money weight and commercial weight were the same, they never used its decimal divisions for the latter. But even in coinage we are accustomed to overrate the advantages, and to forget that the English system has counter-advantages denied to our own, so that we are continually forced to make approximations. We look with so much horror on the English system of coinage, simply because we are unaccustomed to it; in the same way that the English do on ours. Thus an auditor wrote Mr. Herbert Spencer: "I had to go over more than £20,000 of accounts yesterday, and I was very thankful it was not in francs." The advantages of decimals are dependent entirely upon the existing notation (which may some day be changed), and not in any way upon the convenience of the number ten. As an example of the awkwardness of decimals in common transactions, we continually see articles quoted at fifty cents or twenty-five cents a dozen; where any one desiring a single article must pay five cents or three cents for it—an awkward approximation. So far from the decimal notation having acted to bring our duodecimal system of weights and measures into agreement with it, the tendency is entirely the other way. Nothing is more common than cloth at 12½ cents a yard. We constantly find necessity for the eighth and sixteenth of a dollar in retail trade, and in rural places money is still reckoned in 12½-cent "bits." It is only on comparatively rare occasions that we have use for decimal parts of a dollar, or "dimes"—the word is not in use. In 1821, according to Mr. Adams, it was altogether unknown. Fifty cents is half a dollar—never five dimes; twenty-five cents is a quarter. The ten-cent and the fifty-cent piece are the only decimal coins that have ever been issued, except the twenty-cent piece, which was almost still-born—nobody wanted it. Similarly with the eagle. We have the double-eagle, the half-eagle and the quarter-eagle, but no other divisions; the eagle itself is not so called, but ten dollars; and it is never used in reckoning. But take the case of the stock exchange; there, if anywhere, it would be thought that gradations of price would conform to the coinage, the tenth being, as to size, as convenient as the eighth. But not so; the book-keepers are compelled to deal with half-cents even, for the sake of being able to obtain the *sixteenth*.

Our monetary system, then, is at best only partially decimal, in spite of every inducement to the contrary; in spite of the lack of the necessary coins for any other. But how is it with our weights and measures? Let us inspect the numerous numerical relations which the metricists make so much fun of; they are 2, 2¼, 2½, 3, 4, 5½, 6, 7, 8, 9, 12, 14, 16, 16½, 18, 20, 21, 24, 25, 27, 28, 30¼, 31½, 40 and upwards. Here are, indeed, almost every number in the arithmetical series, including fractions; but it is a remarkable fact, that, with a single exception,[61] the numbers *five*, *ten*, *fifteen* are entirely absent; the number *twenty-five* occurs only as the quarter of a hundred. Is this an accident? It is an instructive example of the principle called natural selection, that custom has entirely weeded out the lower multiples of the inconvenient number five; they once existed, and they have given place to others. On the other hand, the numbers most frequently occurring are 2, 3, 4, 6, 8, 12, 16, 20, 24, which is a sufficient indication of the direction in which to look for an acceptable base of weights and measures.

The extravagant views generally entertained as to the advan-

---

[61] Gunter's Chain, invented by an individual, used only by surveyors, and now obsolescent. Those who are fond of nosing in rare and curious volumes may have discovered another, the "geometrical pace" of 5 feet.

tages of decimals are well illustrated by those expressed by Professor De Morgan on decimal coinage in England. "1. All computations would be performed by the same rules as in the arithmetic of whole numbers. 2. An extended multiplication table would be a better interest table than any which has yet been constructed. 3. The application of logarithms would be materially facilitated, and would become universal, as also that of the sliding-rule. 4. The number of good commercial computers would soon be many times greater than at present. 5. All decimal tables, as those of compound interest, etc., would be popular tables, instead of being mathematical mysteries. 6. When the decimal coinage came to be completely established, the introduction of a decimal system of weights and measures would be very much facilitated, and its advantages would be seen."[62] We have had decimal coinage in this country a hundred years, and not one of these consequences has followed, nor are we materially better off in any of these respects than England is.

Great emphasis is laid by the metricists on the fact that the metric system dispenses entirely with vulgar fractions. That is to say, that while we *can* use decimals under the present, we *must* use them under the metric system. The great and radical defect of decimal fractions is that they proscribe the use of eight out of the nine digits from any part in the denominator. Only *one* can be used, and it can be used only *once;* the rest of the denominator must be pieced out with ciphers. This is *uni*formity with an emphasis! But, save to a limited extent (at the most two figures), no man can think in decimal fractions, and the large numbers which they imply. The mind of man invariably reverts a fraction to its lowest terms to gain a comprehension of it. Thus $\frac{14}{24}$ would be thought of as $\frac{7}{12}$, that is, as $\frac{1}{2} + \frac{1}{12}$; $\frac{6}{10}$ becomes $\frac{3}{5}$, and $\frac{76}{100}$, $\frac{1}{100}$ more than three-quarters, or nearly $\frac{4}{5}$. We should have no definite comprehension of the expression 0.125 did we not know it was $\frac{1}{8}$; 0.175 has but little meaning, being expressible no smaller than $\frac{7}{40}$. Even 0.5 is thought of as $\frac{1}{2}$, not as $\frac{5}{10}$; the laborer does not know what is meant by the latter expression. This accounts for the commonest of errors—a misplaced decimal point. Arithmetical operations in decimal fractions are a mere mechanical operation; you do not know where you are till you get through; and careful engineers will

---

[62] Cited by John Bowring, LL.D., in *People's Journal*, Vol. IV., p. 45.

led him to conclusions perfectly definite; and once more I can do no better than to repeat the words of that immortal production:

"From the verdict of experience, therefore, it is doubtful whether the advantage to be obtained by any attempt to apply decimal arithmetic to weights and measures, would ever compensate for the increase of diversity which is the unavoidable consequence of change. Decimal arithmetic is a contrivance of man for computing numbers; and not a property of time, space, or matter. *Nature has no partialities for the number ten: and the attempt to shackle her freedom with them will forever prove abortive.*" . . .

"The metre, very suitable for a staff, or for measuring any portion of the earth, has not the property of being portable about the person: and for all professions concerned in ship or house building, and for all who have occasion to use mathematical instruments, it is quite unsuitable. . . This inconvenience, great in itself, is made irreparable when combined with the exclusive principle of decimal divisions. The union of the metre, and of decimal arithmetic, rejected all compromise with the foot. There was no legitimate extension of matter intermediate between the ell and the palm, between forty inches and four. This decimal despotism was found too arbitrary for endurance; not only the foot, but its duodecimal divisions, were found to be no arbitrary or capricious institutions, but founded in the nature of the relations between man and things. The duodecimal division gives aliquot parts of the unit, of two, three, four and six. By giving the third and fourth, it indirectly gives the eighth and sixteenth, and gives facility for ascertaining the ninth, or third of the third. Decimal division, in giving the half, does not even give the quarter, but by multiplication of the subdivisions. It is incommensurable with the *third*, which unfortunately happened to be the foot, the universal standard unit of the old metrology." . . .

"The opinion has been expressed . . . that the French system, admirable as it is, looked, in its composition, to weights and measures, more as exclusively matters of account, than as tests of quantity; that in its eagerness for extreme accuracy in the relations between things, it lost sight a little of the relations of weights and measures with the physical organization, the wants, comforts and occupations of man; that in its exclusive partialities for decimal arithmetic, it forgot the inflexible independence and the innumerable varieties of the forms of nature, and that she would not submit to be trammeled for the convenience of the counting-house. The experience of the French nation under the new system has already proved, that neither the immutable standard from the circumference of the globe, nor the isochronous vibration of the pendulum, nor the gravity of distilled water at its maximum of density, nor the decimation of weights, measures, moneys and coins, nor the unity of weight and measure of capacity, nor yet all these together, are the only ingredients of practical uniformity for a system of weights and measures. It has proved, that gravity and extension will not walk together with the same staff; *that neither the square, nor the cube, nor the circle, nor the sphere, nor the revolutions of the earth, nor the harmonies of the heavens, will, to gratify the pleasure, or to indulge the indolence of man, be restricted to computation by decimal numbers alone.*"

An argument closely connected with the former is the *simplicity* of the metric system; and it may be remarked, that this system is so *very* simple that no one can have any excuse for not being acquainted with it, more especially as it has been taught in our schools for thirty years; therefore it is denied the plea of ignorant prejudice against it. No one can very well oppose it without knowing exactly what it is he is opposing. But its advocates are chiefly fond of urging that it *will save so much time in the schools.* The time spent by the average schoolboy on *vulgar fractions* and on *tables* is variously estimated as from two years to the best part[63] of the whole period of mathematical instruction. Without stopping for a reply to Dr. Sellers' question, of "how many years are now devoted to mathematics only, in the average four years' schooling of the mass of our boys, and what is to be lopped off to make this saving," let me ask whether any educator really thinks that by any such hocus-pocus he can, in the face of their *universal* use, dispense with vulgar fractions? No! though he should keep them under lock and key from his pupils, they would arrive at them as inevitably as they arrive at the processes of their own nature. Not that they would understand their use so well, or be so apt for the processes of civilized life, as if they had studied them; but the knowledge of them, and of the weights and measures in established use, is, as says John Quincy Adams, "among the first elements of education, and is often learnt by those who learn nothing else,

---

[63] Professor De Morgan before the Parliamentary Committee of 1853 said that the introduction of decimal coinage would diminish the labor of teaching and computation by one-half, and in some cases four-fifths.

not even to read and write." But perhaps the facts are better expressed by a celebrated educator, Professor Charles Davies, who, as the author of a score of mathematical text-books, may be supposed to speak with some authority:—

"Every teacher knows that the first step in a course of arithmetical instruction is to impress the pupil with a distinct and full apprehension of the unit of number, whether that unit be abstract or denominate. . . . But the apprehension becomes dim as the numbers grow large; and young minds, in computation, must be trained in small numbers. . . . In regard to the simple use of the decimal scale, we have already shown that in most of the weights and measures each unit has a half and a double, where, of course, the scale of connection is two and not ten; and this having been adopted from necessity, after the adoption of the system itself, one-half of the units in common use are not in the tables at all—so that the pupil, after having learned his table-book at school, has a new set of units to learn in practical life."

And then there is the pet argument of the theorists—the *scientific nomenclature*—a fit subject for ridicule; an "array of galvanized corpses" (as some one has called them) formed from roots of dead languages dug up out of the dust of antiquity and fitted together like so many Frankensteins. So preposterous, indeed, that, with the exception of France, not a single European nation has accepted them, in the proper meaning of that word. Many have not even made the attempt, but have immediately applied the old names to the new things (and yet are called "metric countries"). Why? Because "to the common mind they are like a party of foreigners in uniform; they all look and jabber alike." Here is what "metrical coinage" would be like:

10 millidollars	make	1 centidollar.
10 centidollars	"	1 decidollar.
10 decidollars	"	1 dollar.
10 dollars	"	1 decadollar.
10 decadollars	"	1 hectodollar.
10 hectodollars	"	1 kilodollar.
10 kilodollars	"	1 myriadollar."[64]

Ridiculous and absurd as this table appears, with its multiplicity of words, syllables and denominations, it is in reality no more so than the actual metric tables, with their superadded

---

[64] Saml. Barnett in *Popular Science Monthly*, May, 1878, p. 82. See also an able article by H. T. White, in *New Englander*, September, 1879, to which I am indebted for many suggestions.

jingle of *metre* and *litre,* of *are* and *stere,* and so on. What hope could they have that the poor man, in making his little purchases, would ever be brought—under penal legislation, too (as Sir Frederick Bramwell says)—to distinguish between *myriametre* and *millilitre,* between *deciare* and *decastere?* How could they expect that the busy merchant would ever be induced to clog his tongue and his books with such things, and to introduce the infinite errors which their similarity, almost to a letter in some cases, would infallibly bring with them? If ever a lecture was needed on the harmony of theory and practice, not in mechanics, indeed, but in the commonest affairs of life, it is needed to-day; and Rankine, with his characteristic spirit, appears never to have regarded the scheme seriously.[65]

They did not really hope or expect these things; for, the fact is, that they had never thought of them. They did just the way men always do, when called upon to act; and being all pure scientists, they built a system which was fitted to their own profession, and no other. In pure science, where time is no object, and precision the highest virtue, the array of ciphers and syllables embodied in the metric system is never thought of as a defect. To the zoölogist, it is as easy to say *Canis familiaris* as to say *dog, hund, chien;* but that they should expect the people,—by whose labor scientific institutions are supported,—for the sake of international uniformity and exactness of definition to follow the same course —no, they are permitted to recommend, but never to compel.

This scientific nomenclature has become a kind of boomerang to the metricists. They are more often called on to speak in its defence, than to use it as an argument. They say the old terms can be made just as much fun of as the new. That the former have imperfections, we all admit;—they are those inherent in the human species. That they are often ambiguous and many-meaning, is true; but their brevity and directness stand out as a transcendent superiority. Then we are told that, in common acceptation of the metric terms, "they will obtain popular abbreviations." But of what abbreviation are they capable? Such abbreviations, if they could be made, would result in an infinitely worse confusion than at present. Words which differ from each other by a single letter, or the sound of a syllable,—what can be

---

[65] Rankine's dissertation "On the Harmony of Theory and Practice in Mechanics" is published as an introduction to his *Applied Mechanics;* he also wrote a funny poem on the metric system, "The Song of the Three-Foot Rule."

done to distinguish them, already scarcely distinguishable? The ingenuity of all France, and of the world, has as yet discovered but one abbreviation, the word *kilo* being appropriated to mean kilogramme, and thereby excluded from kilometre, kilolitre, and all the others. To foist upon us this nomenclature, and then tell us, if it was too long, to abbreviate it — this would indeed be mockery. And then, finally, we hear (the only course which remains) recommended to us, that we can use the old names and apply them to the new values. The answer, which it is scarcely necessary to make, is given by the author himself in the next sentence, that "the Dutch tried this, but it led to so much confusion that the French names were eventually adopted."[66] This is a last and desperate stand on the part of the metricists; for it involves the abandonment of an integral part of the system itself.

I need hardly adduce any further arguments as to the abstract merits of the metric system. It is to-day admitted, by its candid advocates, that it has defects. It is admitted that it is imperfect. But upon the mass of people "little effect will be produced by showing that, if the metric scheme should be established universally, myriads of transactions every day will for untold thousands of years be impeded by a very imperfect system."[67] No, they look only to immediate results (while claiming the opposite), for they say, we must have an international system, and we must have it now, whatever it is, and whether the metric system be a good one or not, it is the *only* one which has any chance of becoming universal, in fact it is quite evident that it *is* becoming universal; we cannot stem the tide, we are losing our credit among the nations, we cannot please our customers, we will have to make the change in the end, and we had consequently better make up our minds to take the dose, first as last. As regards Great Britain and the United States, they tell us on this side that "Great Britain has given decisive indications of a disposition to become metric also,"[68] and if we don't bestir ourselves, we shall be the last to aid in the good work; while in Great Britain they say the same things of the United States. Then they present their long and portentous list of countries, to show us how, as a matter of fact, we are "out in the cold" now. Then they present maps showing (as did Mr.

---

[66] J. E. Dowson, in *Jour. Soc. Arts*, February 6, 1891.

[67] Herbert Spencer, *loc. cit.*

[68] F. A. P. Barnard, before University Convocation of State of New York, 1871.

Hamilton-Smythe in the paper previously referred to) the area of the metric countries, colored black for distinction. The map includes all of central and western Europe, the minute British Isles, and just enough of Russia to show the black extending to the borders of the White Sea. A map of America would, of course, be wholly black, from Tierra del Fuego to the Rio Grande. A map of Africa would include all the civilized portions, Algeria, Senegambia, Egypt to the Victoria Nyanza and the whole of the Congo Free State up to the unknown sources of that great river. The map of Asia—but Asia is wholly uncivilized, and besides, Japan is on the point of adopting the metric system. Several of the islands of Oceanica have already adopted it. And then, finally, they present tables—tables of population and commerce—showing how in reality far the larger part of our commerce is with metric countries. Merely pausing to note the fact that these two arguments are mutually destructive, viz., that *we are losing our trade* and that *most of it is with metric countries*, let us pass on to examine these statements a little for ourselves. Passing by the first, which is irrelevant, with the remark that the area of the British possessions *alone* is greater than that of all the metric countries combined, being one-fifth of the habitable globe, let us look at the statements as regards population. Here is what I gather from the *Commercial Year Book* for 1896, published by the *New York Journal of Commerce*:

Population in Millions.[69]

Metric.		*Non-metric.*	
Germany	49.428	China	405.000
Austro-Hungary	41.285	British India	221.172
France	38.343	Russia	117.562
Turkey (including Egypt)	32.212	United States	62.832
Italy	30.947	Japan	40.453
Spain	17.545	United Kingdom	37.879
Brazil	14.002	Philippine Islands	7.450
Mexico	11.633	West Indies	6.529
Scandinavia	6.786	Canada	4.833
Belgium	6.069	British Australasia	3.810
Netherlands	4.511	Denmark	2.172
Portugal	4.307	British Africa	1.150
Argentina	4.257	Newfoundland and Labrador	0.202
U. S. Colombia	3.879	Total	911.044
Switzerland	2.918		
Chili	2.915		
Peru	2.673		
Venezuela	2.324		
Central America	1.703		
Ecuador	1 270		
Uruguay	0.728		
Total	279.735		

---

[69] These data are for about the year 1890, and of course approximate only.

That is to say, the population of the United States and British possessions *alone* is greater than that of *all metric countries combined*. But how is it with commerce? Here is the commerce of the United States in tabular form, from the same source:

COMMERCE OF THE UNITED STATES IN 1895—MILLIONS OF DOLLARS.[70]

Metric.		*Non-metric.*	
Germany	173.065	United Kingdom	546.291
France	106.595	West Indies	92.761
Brazil	93.996	Canada	89.429
Netherlands	46.199	Japan	28.318
Italy	37.128	China	24.148
Belgium	35.510	British India	24.143
Mexico	30.635	British Australasia	13.735
Central America	18.210	Hawaii	11.609
Switzerland	15.001	Russia	10.179
Spain	14.494	British Africa	5.976
Venezuela	13.814	British and Dutch Guiana	5.437
Argentina	12.131	Hong Kong	4.934
Dutch East Indies	8.882	Philippine Islands	4.850
Austro-Hungary	8.638	Denmark	3.821
Hayti	7.840	All other British Possessions	2.329
Chili	7.257	Newfoundland and Labrador	1.559
Scandinavia	7.166	Canary Islands	0.281
U. S. of Colombia	6.310	Greenland, Iceland, etc.	0.127
Turkey	5.276		869.927
Portugal	4.660		
Uruguay	3.962		
Egypt	3.857		
Ecuador	1.557		
Peru	1.103		
French Africa	0.611		
Greece	0 566		
	664.463		

That is, our trade with the *British possessions alone*, as before, is greater than that with all other metric countries combined. But Central America, Spain, Venezuela, Dutch East Indies, Chili, Colombia, Uruguay, Egypt and Peru are metric countries either only in name, or only for some special purpose (as customs, postage), and their trade amounts to 78 millions; putting these on the other side we have 587 millions as against 948 millions, so that, in fact, our commerce with non-metric countries is nearly two-thirds greater than with the metric.

But how is it with the commerce of the world? Here, I must say, owing to the lax methods of some foreign (particularly metric) custom-houses, no sufficiently reliable data are to be obtained. Nevertheless, we can sufficiently judge as to the leading commercial nations, and the amount of their precedence, by the

---

[70] Compiled by addition of exports and imports.

development of the two leading agents of commerce, by sea and by land, that is, shipping and railways; and this is what the *Commercial Year Book* says about the carrying trade of the world:

THE MERCANTILE NAVIES—NOMINAL TONNAGE.

	1840.	1892.	Increase. Per cent.
British	3,310,000	10,280,000	210
Other flags	6,070,000	12,670,000	108
	9,380,000	22,900,000	144

CARRYING POWER—TONS.

	British.	Other Flags.	Per cent. British.
1840	3,590,000	6,890,000	34.1
1892	27,720,000	21,120,000	56.6

RAILWAYS—MILLIONS OF TONS CARRIED 100 MILES.

United States	845	France	70	Belgium	15
Germany	136	Austria	42	Italy	12
United Kingdom	94	Russia	40	World	1,348

"Here we see that the United States railways do *two-thirds of the goods traffic on all the railways of the world*, although in point of length they only stand for one-third of the total;" while at the same time the tonnage of Great Britain has increased from one-third to *more than one-half* that of *all* other countries, since the metric system first began to be adopted. If there is any thing as regards the metric system which is conclusively proved by *facts*, it is this: that instead of injuring the trade of the non-metric countries, it has proved a veritable Jonah to the metric. Bound hand and foot with decimal divisions, they have been unable to keep pace with the Saxon, and are already lagging far in the rear.

Yet, *in spite of all this*, in spite of utter lack of evidence,—not to say the plainest evidence to the contrary,—we are constantly being told that "its beautifully simple units of measure and their inter-relations are as wings which have enabled it to *outstrip* those that persist in carrying the dead weight of an unscientific and *hopelessly bad system of metrology*."[71]

---

[71] T. C. Mendenhall, *Transactions A. S. C. E.*, Vol. XXX. (October, 1893), p. 120. (Italics mine.)

But this progress of the metric system,—what is it? It seems to me a queerly backhanded sort of progress. It seems to have begun at the wrong end. Who first adopted it, after France? Why, Greece,—a little kingdom in southern Europe of which we seldom hear. I will not here speak of the intellectual development there, but refer my readers to the writings of Lord Byron,[72] who had some transactions with that country. And what one next? Why, Chili—followed by Spain and Portugal. Passing over the first, how many of us have ever seen a Spanish or Portuguese work on engineering or science? Will those who have inform us what they thought of it, and how it compares with our own? We see the French, German, Italian, Swedish works in abundance, and even Russian and Austrian are not wanting. But I have on several occasions tried to find a Spanish work, and have each time been told that there was nothing. Are these the countries whose lead we wish to follow? What are the general ideas we obtain as to the state of popular education in those countries? Some one who has been in Portugal called it "that purple land, where law secures not life." But I pass on. The next countries are a whole series from South America,—one after another,—countries whose normal state seems to be one of revolution. It would be a good deal to say that any decision in those countries was "irrevocable." Who made the decision? Was it the people? No—not even the legislative body in most cases, but the military dictator who happened for the nonce to be in control of affairs. His decision was published in the form of a "decree" (so much for a republic), and may be revoked in the same manner by any of his successors—nay, almost certainly will be, as soon as it becomes evident that they have done a foolish thing, and cannot frighten the race which dictates its own terms to the rest of the world into plunging after them. It would be a fine thing for them, no doubt, to refuse to admit the inch and pound, who are dependent for any hope of improvement upon English capital and American enterprise. It is not too late for the decision to be revoked, for most of the people have not as yet heard of it, or have forgotten.

---

[72] See his *Notes to Childe Harold, Canto II.*, where he has given an extensive description, with examples. "A Greek must not write on politics, and cannot touch on science for want of instruction; if he doubts, he is excommunicated and damned; . . . and as to morals, thanks to the Turks! there are no such things."

Turkey[73] is one of the countries on the list, as also Egypt. Turkey—that vanguard of civilization—was flattered into this move by the present of a standard metre from the other nations. I should be curious to know how much attention is paid to the order of the Sultan in Egypt by the numerous British inhabitants now there, and whether they all use the metre and kilogramme. But that those despised *fellahin*, who form the bulk of the population, and whose ancestors have lived and died on the banks of the Nile, unchanged in habits, customs and utensils for unnumbered centuries (as Miss Edwards says)—that they should, by an order of the Sultan, abandon their cubit and their inch—I would as soon believe that they had changed their mode of progression from their feet to their head, as that one in ten thousand of them even knew what a metre was.

And so on through the list. Then come, lagging along at the end, Germany, Austria,—which we are accustomed to consider among the most advanced of nations; Germany is first on the list of our trade with metric nations,—and last of all (with an unimportant exception), Scandinavia, once mistress of half Europe, and which produced the great Linnæus,[74] and many illustrious men. Our own race, which we are accustomed to consider the most advanced of all, is as yet delinquent.

It is a matter of astonishment to the metricists themselves—as is easily seen by their writings[75]—that thirty years, or rather a hundred, of the metric system, have not, even in this most practical of countries, produced the smallest effect in the way of its introduction. They are almost, in some cases, at a loss to account for it. It never occurs to them that it is the fault of the system, and not of the people. But these benevolent philosophers, having brought their horse to water, and finding that he will not drink,

---

[73] The last report of the House Committee on Coinage, etc. (H. R. No. 795, 54th Cong., 1st session), admits that in Turkey "the law, while obligatory in measurement of cereals and use of weights, is not enforced." If it had put 75 per cent. of the other laws in the same category, it would have been that much nearer right.

[74] It is Linnæus, it seems, not Celsius, to whom we are indebted for the centigrade or "metric" thermometer. (R. H. Scott, *Meteorology*, p. 49.)

[75] I cite one instance. "Returning home, less than five years ago," said Prof. B. A. Gould in 1890, "it was with the expectation of finding the metric weights and measures in general use; . . . how great was my disappointment at finding the usages of our community scarcely more advanced than they had been fifteen years before." (*J. Assn. Eng. Soc.*, Vol. IX., p. 284.)

propose to make him. Their reasoning is somewhat as follows: "We know . . . that in all parts of the world communities do not always comprehend their true interests, and it has therefore been found necessary sometimes, to enforce laws by which to guide them into prosperity."[76] The result is thus stated by Mr. Herbert Spencer: "There lies before me an imposing list of the countries that have followed the lead of France. It is headed 'Progress of the Metric System.' It might fitly have been headed 'Progress of Bureaucratic Coercion.' When, fifty years after its nominal establishment in France, the metric system was made compulsory, it was not because those who had to measure out commodities to customers wished to use it, but because the Government commanded them to do so; and when it was adopted in Germany under the Bismarckian *regime*, we may be sure that the opinions of shop-keepers were not asked. Similarly elsewhere, its adoption has resulted from the official will and not from the popular will. I venture to say that in no case has the retail trader been consulted."

But *have* they adopted the metric system? Let us see. I again take up the *Commercial Year Book* for 1896, and looking under Weights and Measures, this is what I find:

"*Austria*: 1728 punkte = 144 linien = etc. . . . The measures differ in some parts.

"*Egypt*: the common cubit. . . . The weights and measures vary, however, in different parts. [Metric not mentioned.]

"*Mexico*: The weights and measures are those of Spain, but with many local variations. . . . [Metric not mentioned.]

"*Spain*: The metric system is now the legal one. Is obligatory. The old weights and measures, as used in Madrid and Castile, are: Length: 144 puntos =, etc.

"*Sweden and Norway*: [Gives the old measures.] The above are the old measures. The system has since been decimalized, but based on the former units: 100 linies = 10 tums =, etc. In both wet and dry capacity measure the cubic tum, cubic fot, etc., are used. The metric system went into effect in 1878. Obligatory."

Etc., etc.

The members who will take the trouble to look in their D. K. Clark's *Manual* will find the same thing with variations. Mr.

---

[76] J. W. Nystrom in *J. Frank. Inst.*, Vol. CI., p. 385. "Upon the metric system," says Gen. Sir C. W. Pasley, "far more legislation has been expended, from 1789 to the present day, than can be found in all the English statutes on the same subject, since the Norman Conquest. In short . . . [it] may be called the *Bathos of Legislation*." *Loc. cit.*, p. 512, above.

J. K. Upton, Chief Clerk of the Treasury (a warm but candid friend of the metric system), in his comprehensive reply to the resolution of Congress in 1878, has given a list which is much more instructive, but I cannot stop to quote it.

What is the use of giving, for the use of traders, shippers and engineers, all these old measures thirty years or more after their abandonment? Why not simply say "metric system" and stop there? The answer is only too obvious.

I never heard of the metric system being an obstacle to the acceptance of British or American products and labor. I know an engineer who for two years directed the construction of railway work in Peru, and I have often heard him speak of his experiences. I don't remember ever hearing him mention the metric system; but I remember his account of the method of making railway contracts there: the government contracted for a railway between two places *by the mile*,—and then left the contractor to take his own route.[77]

I recently took occasion to inquire of a non-technical friend, who had lived for some time in France and in Holland, and was entirely disinterested, about the use of the metric system in those countries; and I received this written answer: "The weights and measures in France are of the metric system *principally*. The metre is used in measuring cloth, and the litre for milk, and such fluids. The word livre (pound) is also used in weighing small quantities, and the word kilo in weighing large ones. I think in measuring distance they use the word league. . . . Below

---

[77] In answer to an inquiry made since writing the above, this gentleman, Mr. Henry L. DesAnges, M. Soc. N. A. & M. E., sent me the following:

"Henry Meiggs received the contract for the Arequipa and Puno road by the mile, and Mr. Lucas, an eminent English civil engineer, sent out by the English bondholders, while viewing certain portions of the road, said he could only understand why certain deviations from a straight road were made by knowing that fact.

"The several railroads were built by many different contractors, and as those contractors had been trained so they may have thought, that is, either in inches or centimetres, but when the line was finished the distances were all stated in kilometres.

"In our daily lives, that is, in the machine-shops of the English or American lines, the inch or 'pulgado' is used, and I also feel sure that the measure in mercantile pursuits used is the foot and yard; in the schools, of course, both measurements are taught as in our own country. I am not able to say what measure is the standard of the country, or if there is any. Of the currency used, it is decimally divided as in our own coin."

So much for Peru as a "metric country."

demi-kilo, they use 'livre,' and demi-livre, and quart-livre. In Holland they use the ell for measuring cloth, in place of our yard. It is, as near as I can remember, between twenty-seven and thirty inches. They use the word league to measure distance. *I never heard of them using the metric system in Holland.*" (Italics mine.)

Here is a country which is supposed to have adopted the system along with France, and a country where laws are enforced. Yet a person who lived there, among the people, for a number of months, never heard of it, but gives entirely different units!

It is a well-known fact that the words centimetre, etc., are almost as uncommon in Germany as in this country. They still use their *pfund*, their *zoll*, their *strich*, their *schoppen* of beer and their *scheffel* of corn, as formerly; they call the metre a *stab;* and though these are supposed to be now decimally related, they divide them up as they please, as we have already seen.[78] Similarly in Austria. The works of popular French writers are full of the old measures, which must be intelligible to the people. Their use is the commonest thing, and seems to be connived at by the government, which is helpless to prevent it.[79] Yet Dr. Karmarsch, a director of the Royal Academy at Hanover, and one of the commissioners of the German Diet at Frankfort, said in his evidence: "There is not a man in Belgium or France who knows any other measure than the metre, and the foot is quite unknown."

The metric nations are, then, after all, at best only semi-metric. Even in engineering and manufacture, they are compelled —by a far stronger force than any government—to use the English inch *in fact*, though not in name. The English inch, by the sheer force of Saxon supremacy, is the real standard of the world, and used by all Europe for screws, bolts, diameters, gas and steam pipes and fittings, gauges, taps and similar articles. They must call an inch 25 millimetres (and then make it 25.4), and get around the screw-thread dilemma by the clumsy phrase of "threads per diameter." They must use bar-iron rolled to even inches, and machine it to even millimetres. To follow their

---

[78] These terms were abolished by law in 1884, but in about the same way in which the liquor trade has been abolished in some of the United States.

[79] In Bordeaux, for instance, their wine is still put up in hogsheads (*bariques*) and tuns (*tonneaux*), as in 1266, and is so quoted in the published price-lists.

example in this would, as Dr. Sellers has well said, "furnish a precious example of the simplicity of the decimal system."

We are told no country which has adopted this system has yet rejected it—as if thirty years were sufficient for an experiment of this sort, and as if any country would pass a compulsory law as an experiment. But more. We are told that "though beforehand there were plenty of people to predict disaster, the metric system, when once introduced, produced *nothing but universal satisfaction*."[80] Both of these statements are utterly and palpably false. No one could have made them without either a design to mislead the public, or a mind so warped and twisted by intemperate zeal as to be unable to read plain facts when held before them. The very first country upon which the metric system was thrust, after eighteen years of experience, threw it over at the first opportunity which presented itself, and it was not till the popular ruler had again given place to the autocratic one, that it regained the ascendency. As to the other statement, that the people are satisfied, their voice very seldom reaches our ears, but whenever it does, it is the opposite of satisfaction. A Berlin engineer told Dr. Coleman Sellers,[81] "We do not like the metric system, because it has too small a unit, and the metre is too large and involves the use of decimals." In countries where the people are satisfied, it is merely because they never use the metric or any other system, being, as Mr. J. E. Hilgard says, herders and peasants. A fit example of this is in Senegambia, where the metric system is compulsory, *except for fruits*—fruit being presumably the only article that needs measuring in that country.

Nevertheless, as if the people were not sufficiently abused by being told they are satisfied, when they say they are not, it is even alleged that *they* are the ones who are animating the movement, and that it is only his philanthropic interest that leads the agitator to speak in their behalf. This is comparable only to the efforts of the demagogue in the political arena. "All this," says one,[82] after detailing the various countries, "has been accomplished by the pressure of public opinion; it has been distinctly a movement of the people and not of governments; it is a social rather than a political phenomenon." What are the grounds for this astonishing statement? and from what sources did its author

---

[80] *Westminster Review*, March, 1889, p. 280. (Italics mine.)

[81] Letter to *Philadelphia Ledger*, reprinted in *Iron Age*, October 16, 1884.

[82] F. A. P. Barnard, D.D., LL.D., *loc. cit.*

obtain his information? Surely not from the people themselves, for even after the blessing had come, it was impossible to get them to accept it. If every one wants the metric system, why does not every one use it, and why is compulsion necessary? We did not need compulsion in the acceptance of "railroad time." How is it that, if every one is anxious for a compulsory law, not even the daily newspapers deign to notice a bill for its accomplishment?

But it is being said, and apparently believed, that "the technical bodies of the United States" are "*overwhelmingly* in favor of the system."[83] What are the facts? The facts are that some, but not many, of the minor technical bodies of the United States, and two or three, perhaps, of the larger ones, have voted themselves in favor of the metric system, and, in still fewer cases, have memorialized Congress for a compulsory law.[84] Some architects, for instance, in 1876, got together and signed a compact agreeing, after a given date, to use the metric scale in their professional work. It was a miserable fiasco. The Western Association of Architects, also, was prominent in a metrical movement, and this led to the canvass of its members, in regard to the metric system, by the Boston Society of Civil Engineers in 1888.[85] The questions, as regards the metric system, were as follows (41 per cent. voting):

"Is the ultimate exclusive adoption of the metric system in the United States desirable?" 71 per cent. voted aye.

"As to the Society joining in a petition to Congress for adoption of the metric system for government use?" 60 per cent. voted aye.[86]

As a two-thirds vote of the Society was required, and only 41 per cent. of the members would vote at all, the Society "declined to join with the Western Association of Architects in a petition to Congress." The canvass also brought forth a host of objec-

---

[83] W. H. White in New York *Nation*, March 5, 1885, p. 200.

[84] The replies to the circular sent out in 1876 by the Committee of the Boston Society of Civil Engineers show quite clearly the *personnel* of the metricists. Of the 16 favorable answers received, there were 9 medical societies; 3 engineering; 1 belles-lettres; 1 microscopical; 1 chamber of commerce; and 1 female seminary.

[85] See *Jour. Assn. Eng. Soc.*, Vol. VII., p. 264.

[86] Since this was written (in November, 1896), the Boston Society has again canvassed its members on these questions, and a much larger percentage (nearly all) of those voting has voted aye.

tions to the metric system, printed along with the report of the committee.

Again, the Engineers' Club of Philadelphia, in 1878, appointed a committee whose report (adopted April 6), while favorable to the metric system, contains the following clause:

"The Committee deprecates the immediate compulsory adoption of the metric system by state or national legislation, and considers that it would be a work of supererogation to attempt to compel any class of men, either technical or practical, to adopt it to their personal or pecuniary loss."

But the opinions of the engineers of this country are sufficiently shown by the action of the two national societies, namely, the American Society of Civil Engineers and that which I have the honor to address. On the two occasions when the metric scheme for compulsory legislation was brought to their notice, they both gave it their most emphatic dissent.[87]

It is true, unfortunately, that there are some Chambers of Commerce, composed, it may be imagined, of practical merchants, who fancy that their trade, or that the country, would be improved by the adoption, even under compulsion, of the metric system. But it should be remembered that these men have never had time to devote to the abstract consideration of the question; they have seen, generally, only the arguments which the agitators have presented to them; and the metric system, too, is one of those things to which distance lends enchantment. But, moreover, it is wholesale trade, and particularly that with foreign nations, largely involving clerical work, where the decimal system shows its greatest advantage, which advantage in other departments of life would dwindle and disappear.

"See, then, the strange position. The vast majority of our population consists of working people, people of narrow incomes, and the minor shopkeepers who minister to their wants. And these wants daily lead to myriads of purchases of small quantities

---

[87] The action of the American Society of Civil Engineers was in 1876, and was due to agitation on the part of the metricists. It resulted, after a stormy debate, in the adoption of a resolution the opposite from that originally brought in. I refrain, however, from here rendering the details (a moral to propagandists), which are published in the *Proceedings*, Vol. I., p. 321; II., pp. 61, 85, 173; IV., pp. 5, 7; and *Transactions*, Vol. V., p. 355. The action of the American Society of Mechanical Engineers was the result of Dr. Coleman Sellers' celebrated paper, read at the first annual meeting, 1880; see *Transactions*, Vol. I., p. 7; Vol. II., p. 9. The final votes were, in the first case, 102 to 57; in the second, 111 to 24.

for small sums, involving fractional divisions of measures and money-measuring transactions probably fifty times as numerous as those of the men of science and the wholesale traders put together. These two small classes, however, unfamiliar with retail measuring transactions, have decided that they will be better carried on by the metric system than by the existing system. Those who have no experimental knowledge of the matter propose to regulate those who have! The methods followed by the experienced are to be rearranged by the inexperienced!"[88]

I have now passed in review the principal arguments which are presented why we, as a nation, should adopt (and adoption means *compulsion*) the metric system; including those by which it is attempted to be shown that those who think otherwise are in a minority; and no one likes to be in a minority, even if he be right. There yet remain, however, some reasons why we should *not* "adopt" the metric system, or rather, not attempt to adopt it, for such adoption could result in nothing else than failure. Waiving, then, for the present, all those arguments,—granted, for the nonce, that the metric system were abstractly perfect, and that it had been accepted by the most enlightened of nations amid the most popular demonstrations,—it does not therefore follow that we should adopt it. For to do so would be to make a change—a radical change—in a most important and delicate relation; and before we can properly undertake it, it must first be demonstrated—I do not say generally supposed—that the advantages to be gained more than counterbalance the difficulties and inconveniences to be encountered. But the metricists do not seem to have thought of this; they seem to have considered it sufficient to demonstrate the smallest theoretic advantages of the metric over the existing system. They have forgot, apparently, that we do not start with a clean slate. They do not think of what we would *lose* by such an operation. Among all its disadvantages, if such they are, the present system has the indisputable advantage of being already established; which, in a country like this, means infinitely more than it did in any country which has as yet adopted the metric system. A few words from Dr. Sellers will make this clear in *one* aspect of the question:

"America has, for the last half-century, been striving, in its own way, towards equalization of its standard sizes. The immense

---

[88] Herbert Spencer, *loc. cit.*

railroad industries demand this. Standard wheels on standard axles—standard fit sizes for both—are all founded on an inch scale of sizes. . . . A pulley ordered to-day with an eye to fit a 2¼ or a 4-inch shaft made thirty years ago will be found to be to size. Now this American shafting sells freely in Europe, and no one complains of its size."

"It is not an exaggeration to assert that the confusion and loss caused by a change of the system of measurement in Russia, with her millions of peasantry, would be less than that sustained in the city of Philadelphia alone from a like cause."[89]

The people who desire this change speak of the loss of uniformity with Great Britain—with whom our commerce is greater than with all the rest of Europe together—as a mere trifle. They say that the loss of English technical works would be exceeded by the gain of the French and German. With the language of one, and the weights and measures of the other, the majority of our technical men would be practically cut off from both. But what did Mr. Adams, in his Report to Congress, have to say on this subject?

"The Congress of the United States have been as earnestly employed in the search of a uniform system of weights and measures as the British Parliament. Have either of them considered, how that very principle of uniformity would be affected by any, the slightest change, sanctioned by either, in the existing system, now common to both? If uniformity be their object, is it not necessary to contemplate it in all its aspects? . . . Is it not worth their while to inquire, whether an imperceptible improvement in the uniformity of things would not be dearly purchased by the loss of millions in the uniformity of persons? . . .

"If this report were authorized to speak to both nations, it would say—Is your object *uniformity?* Then, before you change any part of your system, such as it is, compare the uniformity that you must lose, with the uniformity that you may gain, by the alteration. At this hour, fifteen millions of Britons, who in the next generation, may be twenty, and ten millions of Americans, who, in less time, will be as many, have the same legal system of weights and measures. . . . They are of the nations of the earth, the two, who have with each other the most of that intercourse which requires the constant use of weights and measures.

---

[89] *Transactions A. S. M. E.*, Vol. I., p. 7; *Iron Age*, October 16, 1884, p. 13.

. . . Precious, indeed, must be that uniformity, the mere promise of which, obtained by an alteration of the law, would more than compensate for the abandonment of this."

It has been often said, that if Mr. Adams could have seen the wonderful progress which the metric system has since made, he would have changed all these ideas, and sent a different report to Congress. It is easy to say, after a man is dead, what he would have done had he lived, and to attribute to him ideas the opposite of those he expressed; but if we are to judge anything as to the present status, from this impartial report, it is this, that had it been dated seventy years later, and Mr. Adams had seen the infinitely more complicated structure of commerce and manufacture which exists to-day, he would scarcely have given the idea of a radical change his respectful consideration.

But why so much haste? Suppose (*per impossibile*) that Great Britain should "get ahead of us," we would be none the losers. We can well afford to wait until she takes the step; it will be so much the easier for us, and we can follow as early as we choose. And if we are not satisfied with present arrangements, and must have a change on general principles, would it not be as well to wait until we can have something better than any existing system? That such can be devised there is no doubt. It is said that the decision of the metric nations is irrevocable—which is saying a good deal. The decision of Great Britain is still more irrevocable,[90] if we may judge by the comparative stability of all her social and political institutions. The present British government has long outlasted every other on the face of the globe. Its securities are more highly esteemed than all others. But suppose this were not the case—because those nations have committed themselves to a rash and foolish step, does that form a valid reason why the others should, like sheep, plunge after them? To do so would be to put

---

[90] If any one is still incredulous on this point, he is invited to the contemplation of the following reply made to the Metric Convention in 1875, as given by H. W. Chisholm, Warden of the Standards (*Science of Weighing and Measuring*, p. 129): "Her Majesty's government have declared that they cannot recommend to Parliament any expenditure connected with the metric system, which is not legalized in this country, nor in support of a permanent institution established in a foreign country for its encouragement. They have consequently declined to take part in the convention, or to contribute toward the expenses of the new Metric Bureau, and they have directed the Warden of the Standards . . . to decline being appointed a member of the new International Metric Committee, or to take part in the direction of the new International Metric Bureau."

the climax upon a retrogression unknown since the fall of Greece and Rome.

It is assumed all this while that the adoption of the metric system could be accomplished by a mere Act of Congress—that we can, if we choose, toss away our liberty as the result of an afternoon's debate, or the report of a House committee; for it is sought to make the continued use of our old habits, even of our old words, a misdemeanor. "There must indeed," said Sir Frederick Bramwell, "be an extreme superiority of one system over the other, to justify an enactment that would cause a man to be considered a breaker of the law simply because he chose to make his calculations by the old system instead of by the new one." It is in vain for the metricists to say that that is not what they seek; anything less than this would be hopelessly ineffectual. But has Congress power to make such a law? and what would the judiciary have to say about its enforcement? The authority is supposed to be based on a clause of the Constitution, which gives Congress power "to fix the standard of weights and measures." But, says Mr. Adams, "it may admit of a doubt whether under this grant of power is included an authority so totally to subvert the whole system of weights and measures, as it existed at the time of the adoption of the Constitution, as would be necessary for the introduction of a system similar to that of the French nation. To *fix* the standard, appears to be an operation entirely distinct from changing the denominations and proportions already existing, and established by the laws, or immemorial usage. And this doubt acquires a further claim to consideration, if it be true, as the experience of other nations seems to warrant us in the conclusion, that there is no object of regulation by human power, in which the prescriptions of a government are so difficult to be carried into execution."

But Mr. Adams proceeds further. "The doubts entertained whether an authority, so extensive as this operation would require, has been delegated to Congress, are strengthened by the consideration of the character of the executive power, corresponding with the legislative authority. The means of execution for exacting and obtaining the conformity of individuals to the ordinances of the law, in the case of weights and measures, belong to that class of powers which, in our complicated political organization, are reserved to the separate States. The jurisdictions to which resort must be had for transgressions of this description of laws, are those of municipal police. . . . In *fixing the standard,* it is believed that Congress must rely almost entirely, if not altogether, upon State executive authorities for carrying their laws into execution. And, although this reliance may be safely indulged in relation to a law which should merely fix the uniformity of existing standards, its efficacy would be very questionable in the case of a law of great and universal innovation upon the habits and usages of the people. Of such a law the transgressions could not fail to be numerous; any doubt of the authority of the legislator would stimulate to systematic resistance against it: and the power of enforcing its execution being in other hands, naturally disposed to sympathize with the offender, the whole system would fall into ruin, and afford a new demonstration of the impotence of human legislation against the laws of nature, in the habits of man."

Mr. Adams is not alone in his opinion. Sir George Airy, who for thirty years sat at the head of successive British commissions, gave to this subject, I venture to believe, a more profound consideration, probably, than any other man before or since. In the discussion of the paper read by Mr. James Yates before the Institution of Civil Engineers in 1854, and printed in Vol. XIII. (page 272) of their *Proceedings,* Airy gave his opinion as follows: "In regard to the assimilation of British coinage, weights and measures to that of foreign countries, it was difficult to express the depth of his conviction that the thing was totally impossible. . . . The plan was totally impracticable as regarded weights and measures, and though not so absolutely impossible in regard to coinage, yet it would produce so much inconvenience, with so little gain, that it could not be entertained. . . . The Astronomer Royal gave his most hearty wishes for the speedy introduction of a decimal coinage. . . . But none of the characteristics above mentioned applied, in the same manner, to weights and measures. . . . In coinage, it [the decimal scale] could be, and ought to be, enforced; but scarcely in anything else. . . . In most cases it would be perfectly vain: no power could make a workman call for three-tenths of a gallon of beer, or would make a householder express his divisions of a ton of coals by decimal scale; although in the latter case the decimals were provided ready to his hand."

Dr. Coleman Sellers speaks for the engineers. "It is in fact, however, so impossible, in view of existing matters and existing harmony in interchangeable matter, that should the metric standard be made the only legal standard in America to be used in buying and selling, the engineering establishments now in existence must perforce use their existing tools and gauges of precision, and continue to make material in conformity with existing matter."

It is charged, even by the impartial, that Dr. Sellers has overrated the difficulty. This is because it is difficult to comprehend, as he does from a lifetime of experience, how inextricably we are bound to the past, and the enormous momentum of our manufacturing industries. But on the contrary, he has, in what he has said and written, very much underrated it; not because he thought of no other, but because he has professed to deal only with one, aspect of the question.

Let us have done, then, with the abstract talk of adopting this or that system of weights and measures, before we have considered the possibility of relinquishing the present. It is easy for the surveyor to talk glibly about measuring his distances in metres instead of feet, and the physician of putting up his doses in centigrammes. But were the seventy millions now dwelling in these United States unanimous in their desire for such a change, they would find it beyond their power to accomplish. They might cease, indeed, to measure by the old standards; they might throw away all their existing scales, rules, measures, gauges, screws, taps, and apparatus of every description used in every-day life, involving a loss impossible to estimate. They might even throw away all their tool-making machinery, and all their immense numbers of costly drawings and patterns. But they could not change their houses and their lands; they could not destroy all their factories and the vast machinery plant which they contain, all based on the existing system. They could not change their public records, nor could they alter the immense literature of all the professions, all based on the foot, pound, gallon and bushel. The thing would be beyond all sense and reason. It would be necessary to discard all the products of civilization, and start again at the beginning. It would be as feasible, and certainly as rational, a proposition, to raze the whole southern portion of this metropolis, and lay it out anew in blocks of 100 metres, because, forsooth, it was not so laid out in the first place.

Take, as an example, the country about St. Louis, which has been for three-quarters of a century a part of the United States. It is here that the *arpent* is used for land measure, as was mentioned earlier in the paper. I take my account from the reply of Ellis Spear, Commissioner of Patents, to the Congressional resolution of 1877.

"The early French settlers of St. Louis and vicinity laid out their land in *arpents*, the common unit for land measurement among them. Since that time the territory has passed from French into Spanish hands, and from Spanish to our own. . . . But to-day there is scarcely a piece of real estate in the vicinity of St. Louis that is not measured in arpents. It is so advertised, so sold, and this word lingers in the speech of the people, and the area it indicates lingers in their daily transactions with a tenacity that nothing appears to shake. Now there is nothing in the arpent which makes it a more convenient unit of measurement for land than the acre. But its retention under the circumstances is something more than a question of mere habit or use. It is because all real estate transactions are matters of permanent record, and permanent records are only changed with great difficulty. . . . For a little district of a few square miles along the Mississippi River now substitute the area of our nation, with its vast estates, its little farms, its villages and town-lots, all measured by acres, its great cities in which ground is measured minutely down to fractions of an inch, and consider the vast and costly records in which the titles to all this property are set forth." But I need not continue.

"At what time can a railway company afford to change the dimensions of the parts of a locomotive engine? At no time, it would answer, because the change would require to be simultaneous in the whole stock. It is true that the old dimensions might be adhered to, but called by metric names, . . . but this would only be an evasion, not a solution of the problem." (J. E. Hilgard, Asst. U. S. Coast Survey, Reply to House Resolution of 1877.)

"It is a consideration from which many important consequences result," says John Quincy Adams, "that the proper province of law, in relation to weights and measures, is not to create, but to regulate." "The legislator has no power over the properties of matter. He cannot give a new constitution to nature. He cannot repeal her law of universal mutability.* He cannot square the circle. He cannot reduce extension and gravity to a common measure. He cannot divide or multiply the parts of the surface, the cube or the sphere, by the uniform and exclusive number ten. The power of the legislator is limited over the will and actions of his subjects. His conflict with them is desperate when he counteracts their settled habits, their established usages; their domestic and individual economy, their ignorance, their prejudices, and their wants: all which is unavoidable in the attempt radically to change, or to originate, a totally new system of weights and measures."

Those who advocate the universal adoption of the metric system have reckoned without their host. The whole order of nature,—sun, moon and stars,—the earth itself, and the human microcosm inhabiting it, are all against them. "There was no advantage in extending this system to the whole universe. That was, besides, impossible. The national spirit of the English and Germans was opposed to it. . . . Meanwhile the good of present generations was sacrificed to abstractions and vain hopes, for to make an old nation adopt a new unit of weights and measures it is necessary to make over again all the rules of public administration, all the calculations of the arts—a task to frighten reason." [91]

Our conclusions, then, briefly stated, are as follows:

1. That the metric system, evolved by a party of scientists of no practical experience, during a whimsical period of history, was the child of metaphysical abstractions, coupled with violence. (Pp. 496–504, 511.)

2. That the French people themselves found they could not use it; and that its attempted enforcement led, not to uniformity, but to chaos. (Pp. 506–509.)

3. That, scientifically considered, the metric system was a failure; that neither of its units was what they purported to be, and that the attempt to make them so has been abandoned as hopeless. (Pp. 504–506.)

4. That the English system, though, like all things in nature, it bears the marks of imperfection, the decays of time, and the usages of civilizations long passed away, yet in its essential elements embodies the wisdom and experience of ages—is, in fact, the survival of the fittest. (Pp. 512–518.)

5. That its slow but irresistible development, unification, and

---

[91] Memoranda for a history of France under Napoleon, by General Count de Montholon, written at St. Helena. Cited by Sir F. Bramwell, and printed in *Popular Science Monthly*, June, 1896. See the whole extract, a most interesting one.

spread are in marked contrast to the spasmodic and Jonah's gourd-like growth of the other. (Pp. 518–546.)

6. That the metre, as a scientific standard, can claim no superiority over the yard, and leaves us, moreover, without that most useful of measures, the foot. (Pp. 547–550.)

7. That uniformity, like most other things, can be carried too far; that to use the same measure and the same weight for everything would be a wanton waste of the time and energies of humanity; that we cannot make Nature uniform, and that the best we can do is to make ourselves uniform with her. (Pp. 550–553.)

8. That, moreover, in practice the metric system has generally served not to introduce, but to destroy uniformity, by superadding new methods, without replacing old ones. (Pp. 508, 548, 555–556.)

9. That the case of other nations is no precedent for us, who already have uniformity in all its essentials; and that where we do not, neither the metric nor any other system will ever be of the slightest value. (Pp. 553–555, 584.)

10. That the decimal divisions, instead of being the greatest advantage of the system, are its most irreparable defect; and that, of whatever uniformity of division Nature and man are capable, it can never be expressed by the number ten. (Pp. 509–511, 556–563.)

11. That the mind cannot think in decimal fractions; that it invariably does think in fractions reduced to their lowest terms; and that, consequently, they are as impossible to be got rid of as the mind itself. (Pp. 559-560, 561.)

12. That the saving in the schools, if any, would be slight, consisting merely of the substitution of the metrical for our present tables; that even this could not be realized for generations; and that a prominent educator, with whom an important educational body have voted their agreement, has given it as his opinion that there would be no real saving. (Pp. 563–564.)

13. That the scientific nomenclature is the most hopelessly unpractical part of the metric system. That, fitted as its terms are for the laboratory and the closet, where time is no object, man in general, in his present state of development, finds it impossible in most cases to distinguish or even to understand them; but that he has refused, and always will refuse, to clog his tongue with superfluous syllables. (Pp. 564–566.)

14. That this scientific nomenclature was precisely the part

most difficult to enforce in France; that, in fact, it never has been found possible to enforce it; that it was rejected formally by some nations, tacitly by the rest, and is even abandoned by its friends. (Pp. 506–507, 564, 566, 574.)

15. That the scientific world had accepted the metric system long before any government, except the French and Dutch, had noticed it; which is a sufficient indication that, had such a course been useful and feasible in other lines, it would have been adopted there also. (P. 557.)

16. That the statements that the bulk of the area and population of civilized nations is metrical, and that our commerce is mostly with metric nations, are wholly without foundation; that the flimsy pretense that we cannot please our customers, when we are not even asked to make our exports to metric measurements, is absurd as well as false; and that so far from suffering from the competition of the metric nations, it is only since their first adoption of the metric system that Anglo-Saxon supremacy has been unalterably riveted on the world. (Pp. 566–569, 573.)

17. That the so-called progress of the metric system has been rather a retrogression,—the "progress of bureaucratic coercion;" that the most backward nations were the first to take hand in it; that they are not those from whom in other things we should wish to copy. (Pp. 570–572.)

18. That, in fact, such adoption has been merely nominal in most, or in all cases, except France; that even there the old names and the old values are still in daily use, and that the government finds itself powerless to contend with them. (Pp. 572–574.)

19. That the assertion that the people ever agitated for a change of system, besides being baseless, is irrational; because the masses of no country or race can appreciate the differences between systems; they use what they always have used, nor do they see any reason for doing otherwise, or why they should require a law to enable them to do so. (Pp. 575–576.)

20. That the opinion of practical men generally in America, and of engineers in particular, approves the metric system *per se* only in a few cases, and almost invariably deprecates compulsion. (Pp. 551, 576–577.)

21. That we see no signs of the prospective universality of the metric system; that, on the contrary, the metric units seldom or never find their way into common use in non-metric countries,

spread are in marked contrast to the spasmodic and Jonah's gourd-like growth of the other. (Pp. 518–546.)

6. That the metre, as a scientific standard, can claim no superiority over the yard, and leaves us, moreover, without that most useful of measures, the foot. (Pp. 547–550.)

7. That uniformity, like most other things, can be carried too far; that to use the same measure and the same weight for everything would be a wanton waste of the time and energies of humanity; that we cannot make Nature uniform, and that the best we can do is to make ourselves uniform with her. (Pp. 550–553.)

8. That, moreover, in practice the metric system has generally served not to introduce, but to destroy uniformity, by superadding new methods, without replacing old ones. (Pp. 508, 548, 555–556.)

9. That the case of other nations is no precedent for us, who already have uniformity in all its essentials; and that where we do not, neither the metric nor any other system will ever be of the slightest value. (Pp. 553–555, 584.)

10. That the decimal divisions, instead of being the greatest advantage of the system, are its most irreparable defect; and that, of whatever uniformity of division Nature and man are capable, it can never be expressed by the number ten. (Pp. 509–511, 556–563.)

11. That the mind cannot think in decimal fractions; that it invariably does think in fractions reduced to their lowest terms; and that, consequently, they are as impossible to be got rid of as the mind itself. (Pp. 559–560, 561.)

12. That the saving in the schools, if any, would be slight, consisting merely of the substitution of the metrical for our present tables; that even this could not be realized for generations; and that a prominent educator, with whom an important educational body have voted their agreement, has given it as his opinion that there would be no real saving. (Pp. 563–564.)

13. That the scientific nomenclature is the most hopelessly unpractical part of the metric system. That, fitted as its terms are for the laboratory and the closet, where time is no object, man in general, in his present state of development, finds it impossible in most cases to distinguish or even to understand them; but that he has refused, and always will refuse, to clog his tongue with superfluous syllables. (Pp. 564–566.)

14. That this scientific nomenclature was precisely the part

most difficult to enforce in France; that, in fact, it never has been found possible to enforce it; that it was rejected formally by some nations, tacitly by the rest, and is even abandoned by its friends. (Pp. 506–507, 564, 566, 574.)

15. That the scientific world had accepted the metric system long before any government, except the French and Dutch, had noticed it; which is a sufficient indication that, had such a course been useful and feasible in other lines, it would have been adopted there also. (P. 557.)

16. That the statements that the bulk of the area and population of civilized nations is metrical, and that our commerce is mostly with metric nations, are wholly without foundation; that the flimsy pretense that we cannot please our customers, when we are not even asked to make our exports to metric measurements, is absurd as well as false; and that so far from suffering from the competition of the metric nations, it is only since their first adoption of the metric system that Anglo-Saxon supremacy has been unalterably riveted on the world. (Pp. 566–569, 573.)

17. That the so-called progress of the metric system has been rather a retrogression,—the "progress of bureaucratic coercion;" that the most backward nations were the first to take hand in it; that they are not those from whom in other things we should wish to copy. (Pp. 570–572.)

18. That, in fact, such adoption has been merely nominal in most, or in all cases, except France; that even there the old names and the old values are still in daily use, and that the government finds itself powerless to contend with them. (Pp. 572–574.)

19. That the assertion that the people ever agitated for a change of system, besides being baseless, is irrational; because the masses of no country or race can appreciate the differences between systems; they use what they always have used, nor do they see any reason for doing otherwise, or why they should require a law to enable them to do so. (Pp. 575–576.)

20. That the opinion of practical men generally in America, and of engineers in particular, approves the metric system *per se* only in a few cases, and almost invariably deprecates compulsion. (Pp. 551, 576–577.)

21. That we see no signs of the prospective universality of the metric system; that, on the contrary, the metric units seldom or never find their way into common use in non-metric countries,

while, on the other hand, the English inch is in many things the virtual standard of Europe, having fought its way against every kind of obstruction; and, in addition, Great Britain, when she has taken a step, has always gone in the other direction. (Pp. 520, 527–529, 546, 574, 580.)

22. That, waiving all these objections, abstract advantages must counterbalance the enormous difficulties of a change, in order to imply the propriety of such a step; and that we should not be justified in taking it without the well-decided concurrence of a majority of our people. (Pp. 535–539, 578–580.)

23. That the legal and political difficulties of such a step are enormous; that it is extremely doubtful whether Congress has either the Constitutional authority or the executive power to enforce it; that no amount of legislation can change the laws of nature. (Pp. 581–582, 584–585.)

24. That a radical change of the weights and measures of a nation, and particularly of our nation, is, in fine, utterly impossible, and beyond reason. (Pp. 582–585.) I have latterly become so deeply convinced of its total impracticability, that I have even felt, many times, that it seemed like a slur upon the intelligence of so practical a body, as that I have the honor to address, to give the subject so serious and lengthy a consideration. But, unfortunately, we cannot avoid the consequences of reckless legislation, which now seems imminent, nor the clamor of those, many of whom have given the matter scarcely more than a passing thought.

The metric writers appear, in many cases, almost fanatical. They repeat continually the old statements, without even mentioning the counter arguments of their opponents—far less discussing them; in most cases, it is safe to say, they have not even read them. Among all the numerous papers which I have seen on this subject, I remember but two or three, where the arguments against the metric system here presented, or any of them, were fairly met and discussed.[92] Even the most candid and best informed of the

---

[92] Unquestionably the best of these is that by J. W. Nystrom, "On the French Metric System" (J. Penington, Philadelphia, 1876), and those of my readers who wish to read the argument in rebuttal are referred to it. Curiously enough, Mr. Nystrom is himself unfavorable to the metric system, so that this may be looked on as the gift of an enemy. Prest. F. A. P. Barnard, D.D., LL.D., devotes the second half of his Address before the University Convocation of the State of New York, 1871, to "objections to the metric system considered," being a reply to the Committee report. He was evidently a believer in the water cure. In the *Popular Science Monthly* for October, 1896, is a reply by Professor Mendenhall to

metricists appear to be ignorant of their existence. Thus Mr. Balfour, in replying to the delegation led by Sir Henry Roscoe, on November 20, 1895, said that "the solitary argument which appears to have been alleged on the other side is that the existing English system is a good gymnastic for the mind;" and he pronounced it "arbitrary, perverse and utterly irrational." Prof. T. C. Mendenhall, too, told the Boston Society of Arts that "its only recommendation is that it has been for many years in customary or common use. It is irrational in theory, irksome in practice, and has been condemned by *all* who are *competent* to speak upon a subject of this kind."[93] Yet this sweeping condemnation would include Sir G. B. Airy, Sir John Herschel, Professor Rankine, Sir Frederick Bramwell, Mr. Herbert Spencer, the many illustrious members of the British committees, and many well-known engineers on both sides of the water,—all branded as incompetent. "It seems to be admitted," says another,[94] "that the decimal division is the only perfect one." It really appears to be the general idea among intelligent men that the only opposition to the metric system is based on prejudice.

Of the minor (and less moderate) writers I can speak but briefly. I have already made several quotations from them. Here are a few samples:—

"If we do not adopt the decimal system, we shall deserve even greater reproaches than have been heaped upon the workmen who destroyed the machinery of Arkwright and his brother inventors."[95]

"The sturdiest opponent must admit that nothing is to be gained by postponement. . . . With a powerful public sentiment in favor of the reform, it may still be desirable that some controlling voice [*i.e.* a compulsory law] should give the signal," etc., etc.[96]

Mr. Spencer's objections to the metric system; in which he undertakes to answer these objections. Some of them he answers by mere empty assertions, without a particle of proof; others by holding up his hands in blank astonishment and exclamation; others by saying that they need no answer (being, in some cases, "old, very old"); the rest (I regret to say) by what almost amounts to epithets.

[93] *Technology Quarterly*, December, 1892, p. 312.

[94] *Bankers' Magazine*, New York, Vol. XI., p. 606.

[95] *Journal of Science*, July, 1872, p. 293.

[96] Paper circulated by Committee of Boston Society of Civil Engineers; see *Practical Magazine*, March, 1876, p. 71. Of Mr. Fred. Brooks, one of the members of this committee, it is but just to say that he is not a minor author, being in fact one of the most active propagators of the metric system that I know of, and well equipped for his cause. But this production is a very fair type of the

"The distinguished opponents of it (and there are a few such left) write rather bitterly, and with an evident sense of working for a lost cause, when they appear against it."[97] If it is true that they "write bitterly," it may be from a sense, not of a lost cause, but of the calamity which would befall the country, should such a law as is proposed ever reach its enforcement. I could quote a score of such phrases from my notes and from the writings to which I have referred.

Then it is charged that those who speak against the metric system—Dr. Sellers, for instance—are "interested parties." No one whose *interest* is involved is to be allowed to say anything. "To the teacher, the scholar, or the professional man, the introduction of the metric system is of the least consequence." It is only they, therefore, who can decide it impartially; they only can see that "it is the practical man only who will reap the great advantage from the simplification of processes of estimates which result from the metric system."[98] But he cannot decide this for himself. It has been said, however, and with some justice, that "the experience of men, as expressed in their systems, is a more cogent and conclusive fact, at least to a philanthropist, than any superinduced state of commerce can possibly be."[99]

Our government in this country is neither socialistic, nor paternalistic. We are not accustomed to government intermeddling in private affairs, and such would be sure to experience strong resentment. "It has ever been the practice of the Anglo-Saxon people to make laws in conformity with customs, not to create customs by compulsory laws."[100]

It may be asked what course I should recommend to Congress, since I decry the metric system. I find this paper has now extended to so great a length that I have no space to devote to this branch of the subject. But I could hardly do better than

---

extravaganza we find, and I only wish space would allow me to quote the rest of it. Mr. Brooks insists that I have spoiled the sentence by clipping off its provisional clause, "One of the commonest remarks that we hear is that its adoption is only a question of time; if that is the case, the sturdiest opponent," etc. As the "if" is there proved to be no if but a fact, I cannot see how this omission alters the sense.

[97] W. H. White in New York *Nation*, March 5, 1885, p. 200.

[98] Minority Report of Franklin Institute Committee, *J. Frank. Inst.*, Vol. CI., p. 381.

[99] J. M. Clark in *Transactions A. S. C. E.*, Vol. XI., p. 408.

[100] J. E. Hilgard, *loc. cit.*

to repeat the parting warning of John Quincy Adams in 1821 (which seems to have been forgotten): "If there be one conclusion more clear than another, deducible from all the history of mankind, it is the danger of hasty and inconsiderate legislation upon weights and measures." And if there is to be a compulsory law of any kind, let it be one compelling our national legislature to leave this matter completely alone, until we can have it decided by a competent and practical commission appointed for the purpose, and let us not be kept in a state of perpetual perspiration on account of untimely appeals and memorials. Such a commission would scarcely be competent to recommend any change, unless it were made international with Great Britain; and I see no reason why it should not be. For the present, we can get along well enough, as we always have done, and managed to obtain almost universal uniformity among ourselves without a single law or penalty on the statute-book.

The author of this paper is well aware that he can lay but little claim to originality; he has borrowed freely from others, his aim being rather to present what should be useful, than what was necessarily new; both in a historical way, and also a clear statement of the arguments adduced on both sides, and their respective merits. Neither can he claim impartiality; although no facts have been consciously suppressed, the whole paper is one long argument; the merits of the case appearing too clear to his mind to admit of doubt. Nevertheless it is with considerable diffidence that he presents this paper for criticism, knowing in advance that this is not the fashionable side in these days; and that not even world-famous men, who have spoken on the subject, have escaped the accusation of prejudice, unprogressiveness, misoneism, old-fogyism[101] and many similar isms. To such a charge, his only answer could be to say, that the conclusions just set forth are such as he would once scarcely have deemed tenable; and to express the conviction that, notwithstanding all the theoretic beauty of the metric system, evolved by so much labor and at the expense of so many disappointments, the experience of

---

[101] Mr. J. W. Nystrom, writing to the Franklin Institute (*Journal Franklin Institute*, June, 1876, p. 385) in regard to their famous report on the metric system, assures them that "if adopted as it now reads, it will *stamp a mark of old-fogyism* upon the Franklin Institute, which can *never* be wiped out, and *under no consideration can that report accomplish the effect intended by its authors.*" The report was adopted.

mankind has proved, that it is no more worthy of universal acceptation, as a system fitted to mankind and to their every-day wants,—far less to be forced upon them to the exclusion of all others,—than the philosophical scheme of Hegel, who built his universe out of abstract ideas,—a mere metaphysical cobweb spun out of the brain of a philosopher.

Note on the Roman Weights and Measures (p. 517).—Mr. Adams says that the scale and metrical pounds were the *pondo* and the *libra;* that 80 *pondo* of wine made an *amphora*, and 16 *librae* of wheat a *modius;* and he quotes from Arbuthnot the ratio of the *libra* to the *pondo* as 84 to 100. But on this point Mr. Adams is certainly in error; as is easily seen by the fact, that his statements are contradictory. For an *amphora* of 80 *pondo* of wine would weigh 95 *librae;* and as 3 *modii* made an *amphora*, the *amphora* of wheat would weigh only 48 *librae*, which would make wine nearly twice as heavy as the same volume of wheat. The fact is, that as applied to weight, the *libra* was identically the same with the *pondo;* the latter being, in fact, nothing more than an adverbial locution meaning "by weight," and *libra* being tacitly understood. It was only as applied to money that it came to mean anything different, viz., a coin, which varied in weight according to the pecuniary needs of the ruling power.

But Mr. Adams's chief source of error is a misconstruction of the Silian law (of B. C. 244), which says, "*Sextarius aequus aequo cum librario siet, sexdecimque in modio librarii sient; i.e.*, sixteen *librarii*, not sixteen *librae*, make a *modius*. The *librarius* is an almost unknown weight, and is apparently never mentioned by classical writers, so that it must early have disappeared from use, being replaced by the *libra* (the Romans preferred the duodecimal division). We can, however, arrive at its ratio to the *libra* by the following considerations. Pliny has given a list of the weight of various average samples of wheat from different portions of the empire, varying from 20 to $21\frac{3}{4}$ *librae* to the *modius;* his average is 250 *unciae*, or $20\frac{5}{6}$ *librae*. But as this was equal to 16 *librarii*, therefore a *librarius* was equal to $\frac{125}{96}$, or practically $\frac{4}{3}$, of a *libra*, that is, 16 *unciae*. Hence, as the Roman *uncia* is the avoirdupois ounce, *the librarius is therefore the avoirdupois pound*, which thus reappears on the stage of human affairs as mysteriously as it disappeared shortly after, and again reappeared in later ages.

Again, taking Pliny's average, an *amphora* of 3 *modii* filled with wheat would weigh $3 \times 20\frac{5}{6} = 62\frac{1}{2}$ *librae;* which is the number of pounds of water in a cubic foot, or of *librarii* of wine in the same *amphora*, and may suggest a reason why this number has been substituted in our own measure for the more proper and convenient 64.

As regards the subdivisions of the Roman weights and measures, the *libra* (= 12 ounces avoirdupois, *nearly*) was divided into 12 *unciae*, the *uncia* into 3 *duellae*, 4 *sicilici*, 6 *sextulae*, or 8 *drachmae;* the *sicilicus* into 12 *oboli;* the *obolus* into 12 *lentes* (there were also a few other denominations). The *pes* (foot = 11.60 English inches) received a similar division into 12 *unciae;* but by another mode, into 4 *palmi;* the *palmus* into 4 *digiti;* the *digitus* into 4 *grani*. Five feet were a *passus*, and 1,000 *passus* a *mille passuum*, or mile.

The unit of liquid capacity, the *congius* (= 207 English cubic inches), was divided into 6 *sextarii;* the *sextarius* into 2 *heminae*, 4 *quartarii*, 8 *acetabuli*, or 12 *cyathi;* the *cyathus* into 4 *ligulae*. 2 *congii* were an *urna*, and 8 an *amphora*. The unit of dry capacity, the *modius* (= 552.2 cubic inches, almost exactly 1 English peck), was of 16 *sextarii;* the *sextarius* and its subdivisions were the same as for liquids. 3 *modii* were considered equal to an *amphora*, which, however, was called *trimodium* in dry measure.

With regard to time, they divided their day, of course, as well as the night, into twelve hours, and even their hours, like their pound, into 12 *unciae* and 48 *sicilici*. But the night generally was of 4 watches. (See Arbuthnot, *Ancient Coins, Weights and Measures.*)

In glancing over these numerical relations it is instructive to note how the duodecimal division, though not complete, has gained a very decided supremacy over every other. The numbers 2, 3, 4, 6 and 12 embrace the great majority of the subdivisions. Nevertheless the octonary system crops out in places, and in the English system seems to have got the upper hand in many respects. A good example of this is the English division of the inch into sixteenths, whereas the common continental and older English division is into 12 lines and 72 or 144 points. In fact the whole history of weights and measures presents a continual struggle for supremacy of these two systems, in which the decimal system cuts no figure worth mentioning, except for coinage, as among ourselves. Yet the Romans had their *denarius* of 10 *asses*, the Greeks their *mina* of 100 *drachmae*, weights for money and a few other special cases, which they might have used for all, had it been convenient. Nor can it be said that this did not occur to them ; nor that the decimal division did not have a fair chance ; for decimal systems in past history have occasionally sprung into existence, lived for a while, and died, while the duodecimal and octonary have remained. Thus, the ancient British division of 10 fathoms to the chain, 10 chains to the furlong, and 10 furlongs to the mile (see *Encyc. Brit.*, Vol. XXIV., p. 484), which existed before the tenth century, has utterly vanished, having been "driven out by the 12-inch foot." Even our modern chain, invented in the seventeenth century by Gunter, for a purpose to which the decimal division is specially applicable, is fast disappearing, being replaced by the 100-foot tape ; because, although it fits very nicely with the square measure, it does not fit at all with the linear, and yet has had no influence whatever in altering the latter.

It is quite true that the eastern nations, China and Japan,—nations till recently outside the pale of international commerce,—are said to use a decimal system; but its regularity, etc., furnish a strong suspicion of its having been tampered with by governmental authority, as our system has in Europe. It would be, at all events, fitting to wait until we can know definitely its origin and its success as a system, before drawing any conclusions whatever from this as to ourselves.

DISCUSSION.

Mr. William Kent.—This is the first attack on the metric system that has been brought to my attention in the last fifteen years, and I am surprised that it should have emanated from Boston, where the Society of Civil Engineers of Boston have declared themselves in favor of that system.* I am surprised, moreover, that it should have emanated from a young man, a recent graduate, I suppose, from a technical school, where the professors are, with some exceptions, bound to cram the metric system into everybody. It was drilled into me by the professors in the high school, and I got some of it in college, and when I graduated I do not know but that I was something of a metric crank. About sixteen years ago, when I lived in Pittsburgh and was a member of the Engineers' Society of Western Pennsylvania, the president of that society, Mr. William Metcalf, came to me and said: "I want you to write a paper against the metric system. These people are coming here and trying to upset our business." I said: "I don't see how I can write a paper against the metric system, for I am already on record in favor of it." "Well," he said, "I don't care whether you are on record in favor of it or not; but you go ahead and write a paper either in favor of it or against it, and that will be what we want—to draw out discussion." So I began writing a paper on the metric system, which was printed in the *Transactions* of the Engineers' Society of Western Pennsylvania, Volume I. And as I did not want to write a paper out of my inner consciousness, I went to the documents. I took the reports of John Quincy Adams and the congressional report of 1879, and the result was I wrote a paper on the metric system, in concluding which I expressed an opinion similar to that of Ensign Stebbins on the Maine liquor law: I was in favor of the law but against its enforcement. I then took the stand that it would be easier to teach all the world one universal language than to teach the artisans of the English-speaking races to dispense with the two-foot rule and the English inch. Every year or two I get a petition for me to sign and send to members of Congress asking that the metric system be adopted; and the last petition that came in was for the compulsory enforcement of that system. There has been a propaganda established in this country, composed mostly of college professors, of closet philosophers, and of men who have been educated abroad, and with whom the metric system has become part of their life. These men, for ten

---

* This is not the first heresy that has emanated from Boston. Mr. A. B. Taylor, an advocate of the octonary system, was from Boston, and Mr. J. W. Nystrom, C. E., inventor of the "tonal" system having 16 for the base, says, "I suppose I must follow the track of Mr. Taylor, and go to Boston to get my tonal system appreciated."—C.

or twenty years or more, have been petitioning Congress and have been trying to educate public sentiment in favor of the metric system. They have failed to create the public sentiment, and are now trying surreptitiously to have this compulsory law passed without the people's knowledge. It is high time that a propaganda be established against the metric system, and fortunately it is going to be a very easy matter to do it. All we have to do is to see that this paper of Mr. Colles' is printed and reprinted for the next ten or twenty years, and put into the hands of every congressman and senator. If any congressman studies this paper he will never then try to pass a compulsory law in favor of the metric system.

Dr. Leonard Waldo.—I rise also to confession. I used to be wholly in sympathy with those to whom Mr. Kent so disrespectfully and irreverently refers, and I was from time to time a member of committees for the propagation of these reformatory doctrines. There are precedents for changing one's views as to the desirability of compulsory shop use of the metric system. The earth itself was the first to get out of the scrape. As soon as she found that her dimensions were inextricably mixed up with the metric system, she changed them, and she changes them every year ever since lest she should be again cornered in that way. I am of that large class whose foot is divided into twelve inches and whose inch is divided in tenths, hundredths, and thousandths. I am very grateful to the two-foot rule, but I would like also to have an edge of it with tenths of inches, so that when a man gets a sheet of metal or wrought iron or tube sent to him we will have some means of knowing just exactly what the man does want. Next to a petition in favor of the compulsory use of the metric system I think I dislike most receiving a petition to advocate a new gauge. We all of us have a beautiful record of gauges which accomplish various difficult things. I think it was Sir Joseph Whitworth who said that if the metric system had got to come, make the metre forty inches long and divide it into 400 parts; a suggestion which rather grows on one as he thinks of it.

Mr. Robert N. Fairbanks.—Before this paper is printed and reprinted so many times, I would suggest that a good many of the palpable errors in it be corrected. In the first place, on page 535, the writer has to go away back to 1877 to get reports from the departments in favor of the duodecimal system. If the writer had taken the reports from the departments last year and the year before he would have found that only one department, and that the Department of the Interior, had reported adversely to the metric system. All the others favored the adoption of the metric system in the United States.

On page 542 the statement is made that the Republic of Mexico is extending the metric system, implying that it is not in use there. The facts of the matter are that during the last year the Republic of Mexico has adopted the metric system and enforced it. The enforcement was attended with no prejudicial results to the commerce of the country. As soon as the people saw that the matter was going to be enforced they took it up. It was carried out by the government, and there is at present no State in Mexico where the people are not doing their business by the metric system and employing it for all their transactions. My remarks are based on personal observation within the last two months.

On page 545 it states that no country has adopted the metric system for the past twenty years. I may refer to the Republic of Uruguay, which adopted the metric system and passed a very complete and successful law on the subject in 1893.

On page 568 all the countries in the right-hand column are contrasted with the countries in the left-hand column which are using the metric system. In fact, those in the right-hand column are using at least *three* different systems, and the systems of the West Indies and Japan and Russia and the Philippine Islands and Denmark are all of them different from the English. So that there is no basis at all for comparison of the totals of the two columns as representing the metric and the English systems respectively.

Then, at the bottom of page 568, it is stated that "Central America, Spain, Venezuela, Dutch East Indies, Chili, Colombia, Uruguay, Egypt and Peru are metric countries either only in name or only for some special purpose." The fact is that in Uruguay no other weights and measures except those of the metric system are used at all, and that in Central America, Chili, and Colombia no weighing machines, for instance, are allowed unless they use the metric system.

Mr. Ed. J. Willis.—No one familiar with shopwork would probably recommend the adoption of the metric system in the shops of this country. But there is a tone in the conclusions of this paper to which I would like to call attention. Our Society was treated very courteously in France. I was not among the party, but I know that I went over there as a member and received every courtesy. I think that the first conclusion of this paper sounds a little unfortunate: "That the metric system was evolved by a party of scientists of no practical experience, during a whimsical period of a whimsical country, and was the child of metaphysical abstractions coupled with violence." I do not think it is necessary for the Society to publish conclusions like the above. The question should be discussed on its own merits, and such references as the above avoided.

Mr. A. L. Rohrer.—I am inclined to think that there are two sides to this question after all. If we consider our own business in this country, perhaps the question need not be discussed, and we would be willing to hold to our own institutions and to our own ideas; but if any gentleman here present has had occasion to sit down and scan drawings which are dimensioned according to the metric system, I think he would realize that there is a little more in this than we would at first think. It so happens that in my experience I have had occasion to exchange drawings with factories in France and Germany, and have almost come to the conclusion that if these countries found that they could make the change and get along so easily with the metric system, that there might be some advantage in it for us.

This paper which we have just heard read, has been very well prepared, and there are evidences of a careful study of the question, yet I think it merits a little more consideration than we have given it to-day. I would very much dislike to have the Society at the present time go on record as being opposed to the introduction of the metric system in the United States, inasmuch as there are practical sides to the question.

Some time ago, in discussing this matter with a gentleman who happened to be in France, in Germany, and in Switzerland, employed in factories there when the change was made, he stated that the change from one system to the other was accomplished with very little inconvenience. They knew far in advance that it was coming and were well prepared for it, so that the workmen accommodated themselves to the new system much quicker than they had anticipated. No doubt this would be our experience here, if the change should ever be made.

As I have stated before, if we had no business relations with the countries using the metric system, if we did not work to each other's drawings and specifications, it would not, perhaps, be of so much importance to us. I disagree with some of the speakers that the question is entirely theoretical. The colleges and college professors, perhaps, as a rule, might be in favor of it, but I think we can find practical men who are also inclined to favor it.

Some of the tables which have been prepared by the author of this paper I think might be modified slightly. On page 567 I notice that in the right-hand column countries are mentioned which are not of great commercial importance. For instance, China with 405,000,000; British India with 221,000,000; or a total of 626,000,000, which, if subtracted from the total of the column, 911,000,000, would leave 285,000,000 as the population of non-metric countries. In the left-hand column we might, for the same reason, omit Turkey with 32,000,000, which, if subtracted from the total of 279,000,000, would leave 247,000,000. The difference between the two columns would amount to very much less. I notice that the writer has placed Russia in the non-metric column. I have been informed that the metric system is used to considerable extent in the manufactures throughout that country, although it is not enforced legally. The railroads, which are patterned essentially after our American system, still retain the two-foot rule.

I am not ready, as yet, to put myself on record as favoring the introduction of the metric system into the factories of this country; but I really think it of sufficient importance to give the matter careful consideration before the Society places itself on record, either in favor of or against.

Mr. F. H. Richards.—It happened that I was in France with the engineers' touring party in 1889, and that I found that halves and quarters were then spoken of quite as freely as tenths and multiples of tenths, among the common people that we had to do business with in going to and from the exhibition. It seems to me there are two very important points in this matter: one is practical and one is legal. Since the time of Mr. Kent's paper (which I have no doubt would be very interesting in connection with the present one) there has been a very illuminating decision made by the United States Supreme Court on the inability of the government to tax the income from real estate, and it seems to me the same doctrine applies here. I am one of those who believe that the Federal government of these United States has no legal power to fix any standard of weights and measures except in its own affairs and its own departments. I have talked with some of our congressmen in New England and I find that almost uniformly they agree with me. Last winter I was told that it was the sense of Congress at that time that it had no power to substitute one system of weights for another; but if they found the people using one kind of measure Congress could fix the standard of that measure, so that all the people throughout the United States might do business on the same basis. I speak of that because this congressman is a man who is very well known.

One thing we sometimes forget in discussing the so-called metric system is that the *metric system* is not a decimal system at all except incidentally. We might have any number of decimal systems. We might have something better or something worse than the present metric system. What distinguishes the metric system is not the decimal feature but its peculiar standard, and although that standard has made a great deal of trouble already, I should like to see some improvement in the present English system of measures. In the English standard we have one which seems to me to need no improvement. It is about as definitely fixed as it is possible to fix any standard, but even if I was an advocate of the adoption of the French metric system, I would not feel at liberty, as a citizen of the United States, to sign a memorial to Congress to adopt a system to displace the one now used, or to restrict the freedom of American citizens in the use of any standard they pleased. Congress, as I understand it, has not the power under the constitution to adopt, much less to enforce, any such law.

I merely want to add to what I have said that I think the experience of some of our engineers who have gone to France and Germany to take charge of manufacturing there may be interesting. They have found that in a very short time they lost sight entirely of the two-foot rule and of eighths and sixteenths, and are able to go along with the metric system without any difficulty whatever. We have, in a few cases, sent workmen over there—ordinary mechanics—and while I have not discussed the matter with them, I have learned incidentally that they had no difficulty in changing from one to the other, although they had the eighths and sixteenths thoroughly fixed in their minds; so that I think we can say that the practical difficulties would not be so great as some suppose.

Mr. Gus C. Henning.—I do not wish to advocate either system, for the reason that we are not ready to do anything, anyway.

But there are several conclusions and tables given which ought to be criticised. One of these conclusions I would like to call particular attention to, and I wish to ask where at any point you can find evidence that the English inch, as stated in conclusion 21, page 587, is the virtual standard of Europe.

I know I have seen Brown & Sharpe's inches over there as curiosities of perfection of American workmanship. I have been abroad some, but I have never heard of the English inch being used as a standard in any of the countries that I have visited except, of course, England.

Mr. Schumann.—I desire to correct a statement on page 577 which implies that the Engineers' Club of Philadelphia took action unfavorable to the adoption of the metric system. But Philadelphia, being a little slow, required eight years to recognize the fact that the world was becoming more cosmopolitan, and within the last year, resolutions have been adopted by the above club favoring the metric system. The discussion at the time brought out the fact that but few men then operated with duodecimals, such as sixteenths or eighths. Nearly every one had adopted a decimal subdivision of some kind.

Whether we use 36 or 37 inches as a unit is immaterial, although the tendency is toward a uniform standard which will be adopted throughout the world sooner or later.

Prof. Jno. E. Sweet.—Just one word in regard to the way the thing works in practice. We have recently taken a contract to do some work for a large concern in Belgium. They sent us drawings, and the studs were marked 19 millimetres in diameter. The drawings did not give the pitch of the thread, so we sent for a French tap to make our studs correspond with theirs. They wrote back that 19 millimetres meant nothing more or less than a three-quarter-inch Whitworth tap.

Mr. Gus C. Henning.—The very title of the paper is incorrect and misleading, as it should read: "The Metric versus the English system." It is improper to call the English system the duodecimal, because the two have no similarity; and while the latter is of great service, symmetry, and beauty, and is rational, the former is just the reverse, being, in my judgment, arbitrary, incongruous, irrational, clumsy, and not even uniform in England proper.

The argument on page 564 that the metric system cannot be enforced among the people because of its absurd or difficult nomenclature is not sound; it is not necessary to use or apply the names of higher multiples of the unit standard any more than we use the names "double eagle" or pounds, shillings, and pence; for we use the dollar to any amount, as the British invariably drop the names, merely saying five, seven, and six, when he means five pounds, seven shillings, and sixpence; what have names to do with bookkeeping, as suggested on page 565?

But let us examine the table on page 567 from a reasonable point of view, on the basis of the only possible proper comparison. The author compares population of metric and non-metric nations and includes all peoples whether Indians, barbarians, or anything else, instead of comparing such peoples only who have "standards" of any kind.

It is a well-known fact that in China weights and measures are almost unknown *among the people*, and that each governor has the royal prerogative of establishing his own values. In India conditions are similar, and comparing the population of peoples and that part thereof who habitually use weights and measures, this table should read as follows:

POPULATION IN MILLIONS.

Metric.		*Non-metric.*	
Germany	49.428	British India	5.000
Austro-Hungary	41.285	United States	62.832
France	38.343	Japan	40.453
Turkey (including Egypt)	32.212	United Kingdom	37.879
Italy	30.947	Philippine Islands	1.000
Spain	17.545	West Indies	2.000
Brazil	14.002	Canada	4.833
Mexico	11.633	British Australasia	0.500
Scandinavia	6.786	Denmark	2.172
Belgium	6.069	British Africa	1.150
Netherlands	4.511	Newfoundland and Labrador	0.202
Portugal	4.307		
Switzerland	2.918	Total	158,021
Total	259.986		

The table in this rational form puts a totally different aspect on the question, and the conclusion, top of page 568, must be exactly reversed. In civilized Russia the metric system is in use as well as in all international relations and matters, hence it is dropped from the table altogether.

The tables on page 569 are equally misleading, as a vast proportion of commerce of metric countries is carried by ships carrying the British flag, although not properly British tonnage, as given in *Commercial Year Book*. The figures given are used for a definite purpose, without discrimination or proper knowledge of their bearing on the question discussed.

Our own consuls have reported frequently that our foreign commerce is seriously hampered by our failure to use metric standards, and will not assume proper proportions until they are generally introduced. In trade the seller must suit himself to the buyer.

Now, while the author has carefully rehearsed all attempts to introduce the metric system in Great Britain, the United States, and France, he totally ignores the successful, rapid, and peaceful change made in Germany, where it has taken only one generation to almost produce oblivion of all previous systems, in spite of his assertion that the English inch is still the only standard. Of course, when explaining to English-speaking persons what 19 millimetres means, he will always—remembering their unfamiliarity with the metric system—say "about one inch;" but they never use any such measure, nor can one be found. As to the common people, who from childhood hear of nothing but metres and kilos, they use no others, in spite of the author's statements to the contrary, as I have learned through personal experience. Why does not the author explain how little friction has occurred in Germany, the most important metric country? He carefully omits all of these facts, while he makes much of the troubles had in France during a period which is unique in the history of the world.

When a German speaks of his "schoppen bier" he means a particular vessel rather than quantity; but the fact is that he rarely uses this term, as the term one-half liter is much more common, and all glasses and jugs are thus marked. If the author gives prominence to "pfund," "zoll," "strich," etc., etc., why does he not call attention to the absurdity of the 40 various bushels, 36 yards and ells, 12 hundredweights, 7 stones, etc., etc., in common use in Great Britain? He should at least have been just and fair and not exaggerate, as he does throughout the paper, and the assertions made by his friends, one of whom states that he "thinks in measuring distance they use the word league in France," are not worthy of credence, as the kilometer is in universal use even in Germany, although *old people* will still talk of "stunden" (hours), never having lost the habit of thinking of distance by time required to reach the same afoot. I do not think that such statements should stand unchallenged.

Now let us look at the 24 conclusions drawn by the author. Nos. 1, 2, 4, 5, 7, 8, 11, 12, 13, 15, 16, 17, 18, 20, 23, 24 are, in my judgment, either wholly or partly erroneous, based on lack of information, false statements of others, or incorrect knowledge. No. 19 is partially wrong, for in England the various Boards of Trade are constantly agitating the simplification of weights and measures due to friction and trade causes by lack of uniformity. No. 20 is only true in non-metric countries, because in France, Germany, etc., etc., all industries and trade are carried on by the sole use of the metric standards. No. 21 is only partly correct, as it is not true that the English inch is at all used as a standard in metric countries. No. 23 is very questionable, as proven by Germany, where political difficulties did not arise and legal difficulties were readily adjusted. No. 24 is unwarranted, as it cannot be said that the introduction of the metric system in this country "is utterly impossible and beyond reason" until it shall have been tried.

*Mr. Geo. W. Colles.**—There have been a number of criticisms made, and in order to treat them all I shall have to be brief in my answers. I would premise, however, that some of these criticisms are already answered in the paper, as will be found on a more careful perusal. For instance, it seems to have been supposed that the conclusions on pages 585 to 538 were intended for arguments, whereas they are intended only for a syllabus of the paper, as presented on the previous pages. In order to make this clear, I have appended to each conclusion the pages to which it principally refers. Other criticisms are based on a misconception, and I have been made to say what I never did say.

Several of the criticisms refer to my tables on pages 567 to 569. These tables were prepared to refute the statements which are being made and circulated by metricists, mentioned on page 567, to the effect that the bulk of the world's population and commerce is metric; and they do refute them. They do more than that, for they prove in each case that the Anglo-Saxon races, which all use practically the same measures and language, control the population and commerce of the world. Everything proved besides is supererogation. Mr. Rohrer thinks that I should omit China, India, and Turkey from the table of page 567. If you start

---

* Author's closure, under the Rules.

to doctor figures you may make them read almost anything you please. I don't know why you should omit China, I'm sure, unless it's because you don't think the people there are civilized enough to be classed as population. It is to be observed, however, that vast hordes are included in almost every country on the left-hand side, who, if they ever heard of the metric system, certainly do not use it, and a large portion of these probably less civilized than the Chinese. When you cut out all these, you might find the ratio to stand worse from a metric point of view than it does now. This table is not a census; it is a plain common-sense average, which cannot be expected to give more than a general idea. Everybody can see how it is made up; and if it doesn't accord with his views he may alter it to suit his fancy.

The table on page 568, which is of more importance, is intended to show where we *must* use metres, and where we *may* use yards in our foreign commerce. I believe there is but a very small portion of our exports in the metric column where we do in fact use metres. For instance, according to Dr. Sellers (p. 579), our American shafting sells freely in Europe, and no one complains of its size. I have already shown (p. 574) that our sizes are used in other things also. Mr. Fairbanks takes exception to the countries named at the bottom of page 568, because of what is not allowed there. It was because of what is not allowed there that I put them on the left-hand side of my table, but it was because of what is used there that I made a separate collection below. To call some far-away land of llamas and gauchos a metric country, because the metric system is used in the custom-house, as is the case with some of these, is ridiculous.

It has been stated that Russia uses the metric system in some cases; which, you know, cannot be, because it is not yet legalized there, which, according to the metricists, is necessary before it can be used. Russia does, however, use the metric system for some purposes, and so does the United States. If you take one you must take the other. This allegation of Russia shows what a sham all this metric argument is.

Mr. Fairbanks says I had to "go away back to 1877" to get reports from the executive departments in favor of the duodecimal system, and that, if I had taken the reports of the last two years, I would have found only one department adverse to the metric system. Now, in the first place, I did not go back in order to get those reports; they are a part of the subject which I began at the beginning, and I took them in as I passed along. The quotations from those reports were given for two reasons: first, because, as stated in note 46, misrepresentations have been made concerning them; and second, because they present very strong arguments against legislation favorable to the metric system. The criticism that I did not insert the more recent reports is a fair one; they were not printed in the report of the House Committee, but in a secondary pamphlet, which missed my attention. I have remedied that omission. But let me say that these last replies from the executive departments are but very fragmentary; only eleven replies were received, and but eight generally favorable, or only two more than in 1877. These replies were not to a resolution of Congress, but to letters from the Coinage Committee, and I think it ought to be explained why we haven't heard from the other departments, particularly those which proved so refractory in 1877. I do not, of course, wish to be understood as pinning my faith to that of the government officials.

I should be sorry to be thought to resort to epithets in place of arguments, but I think Mr. Willis's criticism of my first conclusion is due principally to his not having read the paragraphs on which it is based. Surely no one can read that history impartially and say that that conclusion is not justified. My phraseology was chosen advisedly, and after much reflection I see no reason for altering it, except in one particular, which, as it was not properly a deduction from the paper, I have expunged.

What I said about the Engineers' Club of Philadelphia (p. 577) was that their committee's report was *favorable* to the metric system. That report was quite elaborate; but the more recent resolution of the club was brief and said nothing about compulsory adoption.

There has been some misunderstanding of my conclusion 21, owing to insufficient emphasis of the word "virtual." I did not mean that the term "inch" is used to designate that magnitude; but the magnitude exists, though obscured as 25 millimetres, which is only an approximation. All this is given brief mention on page 574, and another example has just cropped out in Professor Sweet's 19-millimetre tap. I thought these things were tolerably well known.

There has also been some misconception, I think, of what is meant by the common use of a system, like weights and measures, in a country. People seem to think that if only the manufacturing and technical element of a community uses the metric system, that constitutes common use. Now, the manufacturing and technical element is that which, after the government itself, is the easiest to reach by a compulsory law. But although to have forced the factories to carry on their work with metres is certainly to have accomplished a great deal, it is very far from everything. It is only a small part of the whole. The great mass of the measurements of a nation are those carried on between private persons or small dealers in everyday life, which, according to Spencer, constitute transactions probably fifty times as numerous as the others. It is these which it is well-nigh impossible for the most autocratic of governments to affect; yet it is these very ones which are overlooked by everybody. Possibly there are those who think that these bear no relation to engineering, and therefore ought not to be considered. All I have space to say here is, I hope they will think twice on that matter.

With regard to the communication of Mr. Henning I have very little to say. It is a good example of just such writings as this paper was written to refute. There is no use rehashing the paper by way of answer, and there are only a few things which need special mention.

The question of title has been already discussed on pages 494 and 495; and the apology for the nomenclature, on the ground that we need not use it, except in the case of the fundamental units, on pages 550 and 565. Any one who has kept books can answer the question about bookkeeping.

Recommendations from consuls accredited to metric countries, that we adopt the metric system, are nothing new, nor in any way astonishing. If our "commerce is seriously hampered by our failure to use metric standards," let the manufacturers look to that. I have not heard any complaints from that quarter. In the meantime we continue to sell our goods there, made according to the old standards, whose advantages we are not reminded of by our consuls to English-speaking countries; so we conclude conformability with the latter is of no consequence.

Possibly some of my more acute readers have perceived reasons why I should not give so much space to Germany as to France, Great Britain, and the United States, other than because the change was "successful, rapid, and peaceful." If I had been a metricist (which is really the only fault Mr. Henning has to find with me), doubtless I would have omitted France, Great Britain, and the United States altogether, and filled up my paper, as theirs are filled up, with trivial matters, with letters from other metricists, and with vehement asseverations.

To the "40 various bushels, etc., of Great Britain" very emphatic attention has been called on page 554; and to the anomalous measures of the United States, also, on pages 554 and 584. It is proper that my critic should know that this is a two-edged sword and should be used with caution.

It is suggested that my non-technical friend, quoted on page 573, is not worthy of credence. Doubtless not, to any one of the metric creed, because the evidence was not collected in the proper way. What I should have done was to obtain some one to go abroad and to those districts where the metric system is used, and to write me that it is used there. Instead of doing this, I inquired of a plain tourist, who travelled among the people, not among manufacturers and technical men, and to whom I did not signify previously the object of my inquiry. The evidence is contraband, but it may not be without interest.

I have still a few remarks to make on the legislative aspect of this question—the aspect we are chiefly concerned with—and Mr. Fairbanks' statements about Mexico furnish me a very fitting text. Not even Mr. Fairbanks has told the whole story about Mexico. On page 542 are mentioned the three obligatory laws of 1857, 1861, and 1865, and their results taken from the 1877 report of J. K. Upton, chief clerk of the Treasury, an advocate of the metric system. One would suppose that three such laws, or even one, would insure the use of the metric system by everybody *instanter*. But, lo and behold, seventeen years later, in 1882, we find the same process being gone through all over again, just as if it were entirely new and unheard of before! and at the same time, a very zealous metricist writing home in disgust (*Jour. Assn. Eng. Soc.*, Vol. I., p. 246) "how complicated a simple matter may be made when human ingenuity is bent on finding out how *not* to do it"—this regarding railway construction, where of all places you would expect it to run easiest. The law of 1882 was to go into effect in 1884, but the date was afterward, it appears (*Jour. Assn. Eng. Soc.*, Vol. III., p. 133), postponed two years longer. Now, then, just as if nothing had been done at all during the last forty years, here we have a brand-new law this year solemnly assuring us (although there are no penalties attached to this one) that "from and after September 16, 1896," the metric system "will be the sole legal system in the United States of Mexico," and Mr. Fairbanks, with equal solemnity, telling us that this settles it, and nobody in Mexico uses anything any more but the metric system.

Now, what does all this convey to your minds? and does this present assurance really look more reasonable than the old, old song which we have been listening to for the past twenty years? How many other laws besides those I have mentioned have been enacted in Mexico I don't know, and how many will be in future, time alone can tell. But don't for a moment suppose this is an exceptional case. Far from it. Mr. Fairbanks himself has supplied us with another,—Uruguay,—which is classed in my list of metric countries as it has been in others for thirty years. Whether they passed a law there in 1893, and whether it was one of their old laws passed over again, or a new and more radical one—these things I leave for others to explain. But Uruguay is not a new metric country. Take Peru, another from South America, and read what was written me by one entirely disinterested, so far as I know, and whose experience there is not, I think, more than five or six years old,—my note 77 on page 573. Take Holland and Belgium, which made the metric system compulsory at the beginning of the century, and then did it all over again half a century later,—and *still* a traveller in Holland returns without having heard of its being used there! Take Turkey, which did the same thing in 1869, and then again in 1895. Some metricists say it is compulsory in Turkey, and some say it is not. Some metricists say it is compulsory in Greece, and some say it is not. Even in Germany, where laws are as autocratic and stringent as you will find them,—the country they hold up to us as a model,—we find a new law passed in 1884, nominally to amend that of 1868, which permitted the common terms as applied to the metric quantities, but in reality, it seems, because that law would not work, and to patch it up so that it would. Those common terms were not applied to the new quantities as the law had prescribed, but to the old quantities, just as they always had been; * and so throughout the country by the common people you will find them to-day. There is France, the stronghold of the metric system, crying to our government for aid against the *aune* system, abolished one hundred and three years ago, and which they say, by

---

* This is practically acknowledged in the argument for the law of 1884, attached to the draft of that law printed by the imperial government; and, in fact, the same rule seems to apply here as to some other German laws (according to official utterance); infractions are "tolerated. but not permitted."

being used in invoices of goods, is causing frauds in their customs receipts (*Jour. Assn. Eng. Soc.*, Vol. XII., p. 227). These are a few isolated cases, and they will do to exemplify a little further what I have already tried to establish in the pages of this paper; but I could quote a great many more instances, and most of these are from evidence furnished by the metricists themselves. If any one would take the time to look into the matter for the purpose of overthrowing the partisan evidence of the metricists, I haven't a particle of doubt a mass could be collected which would turn theirs to ridicule.

Now, what does this country propose to do? or rather, what does this little handful, at most a few thousand out of our seventy millions, propose to have us do? Do they want us to take this legislative physic for the rest of our lives? That is what the other countries are doing and have done, and they propose that we shall do the same. That is what it means, and let us understand it before we begin. Let us enter this quagmire with our eyes wide open, and not think we can go a little way and then return. We gave them the law of 1866, which means nothing and doesn't hurt us any, but now they take that and use it as a handle to make us go a step further. Another step, and it only gives them better opportunity to insist on the next. I am not now speaking against the metric system *per se*. Any one is at liberty to admire that as much as he pleases, but to enact it into a law is another matter. I admire Platonism, but I don't want it enacted into a law. This metric system has been justly termed the *bathos of legislation*, upon which, said General Pasley forty years ago (p. 572), "far more legislation has been expended than can be found in all the English statutes on the same subject since the Norman Conquest."

This is the era of patent medicines and panaceas. Just now it is legislation that is to cure all ills. We have just witnessed the attempt of a large portion of our countrymen to increase their wealth by legislation. People say Adams's report is old-fashioned. If any one thinks so, let him forget that Adams ever wrote it. I do not quote it because it is Adams's, but because it is common sense. If any one has not read the quotations on pages 579 to 585, for instance, I hope he will stop and do so before continuing to advocate an impossibility.

Some one has remarked that "when the people saw the law was going to be enforced they took it up." There you have the *crux* of the whole matter. *When* they did,—but, no matter when *they* did, how long would it take everybody in *this* country to make sure the Federal Government would or could enforce a law of this character? They tell us other nations have enforced it. So also have other nations enforced military conscription in time of peace, but I do not suppose any one will have the hardihood to argue that *that* could be enforced in this country. "When the King of Prussia," said a witness before the Coinage Committee of the House last winter, "desired a metric system, he said 'let there be a metric system,' and there was one. As soon as *he* was impressed with the idea of its excellence, it came into existence." In that saying you see the broad chasm which divides our government from every other government on earth; yet the zeal of these people is so blind that they have forgotten that all-essential *he* is lacking to us. This government is strictly one of the people, and, outside of government business, I do not believe it is in the power of Congress to enforce any law whatever in regard to weights and measures. I believe the most they can do is to say that this or that measure shall be of such a size. I do not believe they could even enforce the use of that size, as was done in England, but merely its recognition by the courts.

I wish to enter an emphatic protest against this proposed abuse of the legislative function. No one supposes there will be any bloodshed, but that is simply because such a law would be a huge joke. It would do nothing but create endless confusion. The bare thought of the enforcement of a law compelling a man to give up his yard-stick and use metres in his private business is ridiculous to any sane American. As to the use of the metric system by the government, that, of course, could be done, although the change would add an enormous expense to the annual budget, and when it was done, the discord with the people, which would continue to exist, would far more than counterbalance any gain in the clerical work. They talk of uniformity, but what uniformity would we have then? The only place in the government system where there is any sense in the metric plea is the custom-house, where some imported goods are invoiced in metres and kilogrammes. To change the whole custom-house reckoning for these is not simply to discommode all the business in the country, but to subordinate the greater interest to the less. I have already shown on page 568 that our trade with British possessions alone is greater than with all metric countries combined;

but even if it were not, I can see no advantage in changing. Metric goods may be taxed by the metre and kilogramme, other goods by the yard and pound, and this may be done without any law at all. I do not know whether the committee on this subject, which has just been appointed by the Council, have thought it sufficient merely to oppose a law which applies only to the people at large, but I sincerely hope they will not neglect to oppose any such scheme as this, which is a mere cover for the other, and will serve only to make such diversity as exists a hundred times worse than it is at present. It is not, to use the words of another, a leap in the dark, but a leap in full daylight, into a metrological chaos.

As to whether the people of this country, as a whole, will of their own free will change their standards of weighing and measuring, it ought not to be necessary to argue. People are fond of telling themselves that the tendency is toward uniformity, that it must come about in the end, and what a blessing uniformity would be, and so on, and the same may be said of language and a dozen other things. I know there has been a great metric boom in process of formation for the past thirty years; but, as another engineer has said, " booms may come and booms may go, but our people are about as likely to discard their habits of thought and action regarding weights and measures as they are to set about training themselves to become ambidexters."

NOTE.—This edition has been thoroughly revised, and everything which required correction or modification, corrected, and a number of notes of interest added. Mr. Frederick Brooks, M.A.S.C.E., has kindly undertaken to assist me in this, and I am indebted to him for many suggestions. Mr. Brooks has been an active leader in the metric movement since its inception, and has an immense library on the subject; and anything he has failed to point out I fancy is not of great importance.

DCCXXII.*

J. F. HOLLOWAY.

BY F. R. HUTTON, NEW YORK CITY.
(Member of the Society.)

It is one of the distinctive peculiarities of engineering as a profession, which it enjoys in common with architecture and art, that the creations of its practitioners are embodied in concrete objects which outlast the lifetime of their creators, when deserving of this distinction. It was the boast of antiquity that a monument more enduring than bronze could be left behind a man when he passed away, and the cathedral, the bridge, and any structure built for a long time are fitting memorials in which a posterity may see the glory of its past.

It happens, however, frequently, that for the mechanical engineer the search for his successes does not lead to the discovery of monumental achievements, but includes only a great number of small and perhaps unnoted constructions whose magnitude in the aggregate would deserve to be recognized if such aggregation could possibly be made. But even more often a great engineer leaves behind him a sense of loss among those who knew him, which bears no suggestion of that loss when the lifeless hand of a master drops from a single unfinished work of great magnitude. And in such case the reason for the feeling of loss and sorrow is to be looked for in springs deeper than those from which come the appreciation of intellectual greatness alone. It must be that it is the man and the character which are mourned, and not merely the things which his intellect enabled him to do.

It is something of this sort which lies in the minds of his friends as they convene to speak of their respect and admiration for Mr. Holloway. He was not a great engineer in the sense in which Smeaton, Watt, Stephenson, or Corliss have been great, in the sense of making their name one which is to be found wherever the student of the history of engineering searches for the names of those who have distinguished it and who are known

---

* Presented at the New York meeting (December, 1896) of the American Society of Mechanical Engineers, and forming part of Volume XVIII. of the *Transactions*.

J. F. Holloway.

world-wide for these reasons. But he was a man whom every one respected for his sound judgment in engineering and business matters, for his unfailing unselfishness and devotion to interests and objects upon which he had set his heart for others, and in his determination that the profession of engineering should secure from the world at large the recognition which its importance and its work in the community should command from those whom it benefits.

Mr. Josephus Flavius Holloway was born January 18, 1825, in Uniontown, Ohio. His father came originally from Pennsylvania. When Mr. Holloway was six years old his father moved as a pioneer to what was then known as the Western Reserve, and their first settlement was a homestead upon the bank of the Cuyahoga River, near what is now the town of Cuyahoga Falls. When he moved there, there were but six houses in the midst of the wilderness.

The place afforded but meagre opportunities for education of the growing lad at school, but as most of the early settlers were pioneers from Connecticut, they brought with them their refined ideas and their New England culture, so that many of the standard works of literature were to be found in their precious libraries. Those who have had occasion to come in contact with Mr. Holloway's literary taste and almost poetic turn of mind will perhaps understand that his appreciation of what is best in literature had its source in the careful reading of those early days.

He was apprenticed to learn his trade to a firm of engine builders in Cuyahoga Falls and was considered their most capable apprentice. It will be remembered by many that some of Mr. Holloway's most interesting reminiscences covered this period when he was mastering the art of doing good work with limited facilities. He has spoken of the boiler punch of his apprenticeship days, which was a steel drift-pin attached to the end of a plank under a tree by the roadside, so that the weight of the workman upon the long end of the lever could be made to jump a hole through the plate. He has spoken also of how impossible it was in those early days to make boiler seams tight with the appliances then in use, and that it was customary to put into the boiler, before closing it up for test or for use, some material which would be forced into the open joints by the pressure from within and take up the leakage in this way. It has been well said that the mechanic of resources is not so likely to be developed under the conditions now prevalent among the operatives with high-class machine tools, and that those early days produced a mechanic and engineer which it is difficult to find in these later years. His life in Ohio spanned the period of the introduction of the railroad and locomotive engine into that rapidly growing section, and every one who has heard him speak of the responsibility and the debt which is owing to the engine driver of the locomotive, will have recognized that this knowledge came from actual experience upon the road and in the cab.

His first absence from home was for a year in Cabotsville, Mass., but at different periods of his early life he was engaged at Wilmington, Del., in steamboat engine design, and at Cumberland, Md., as manager of a coal mining company. For several years he was general manager of a coal mining and iron manufacturing company at Shawneetown, Ill. It was at this time that Mr. Holloway came into acquaintance with the firm of Sellers & Company of Philadelphia, originators of that iron company.

At the close of the war, 1861–65, he entered the employ of the Cuyahoga Steam Furnace Company of Cleveland, which was doing a miscellaneous line of foundry and machine work, but probably more of machinery for the lake traffic than with iron and steel works machinery, which became their later field. On the death of Mr. W. B. Castle, in 1872, he became president and remained superintendent of the company, conducting the works in the interest of the other stockholders, for whom he stood as a representative and protector. The Cleveland Rolling Mill was one of the early companies to begin the manufacture of Bessemer steel in the West, and under the direction of a German metallurgist, Herr Greiner, the necessary work for the installation of that plant was largely done at the Cuyahoga Furnace Company's works. Later the blast furnace blowing engine became quite a specialty of the establishment, and some very large and successful engines of this class were turned out. It is an interesting feature of the work of this period that, for reasons satisfactory to those concerned in the management of the old-established works, it was not thought advisable to enlarge its equipment by the purchase of new machine tools such as were coming into use in the newer and rapidly growing works which were looking to the future rather than to the past. It was a pride of Mr. Holloway's to do work of a size and quality, with his small and inadequate tools, for a price which could not be reached by rivals who were better equipped. The early training in expedients for doing work was here made to tell for the interest of those for whom he was working, and the application of portable machinery to operate upon massive work was one of the fundamental features of this achievement.

He was ably seconded in his endeavor by his choice of most capable lieutenants in his foundry and in other departments, so that it was a boast, which the result justified, that they could cast a blowing engine fly-wheel with an accuracy and success such that, when in place and revolving, the unfinished casting would run as true as the finished fly-wheels of competitive establishments. Mr. Holloway conducted these works until 1887, when they were sold out on favorable terms to the Cleveland Ship Building Company, leaving Mr. Holloway free to look for another opportunity for his energy. It is during this connection with the Cuyahoga Furnace Company that the successful meeting of the Society was held in Cleveland in the spring of 1883. Mr. Holloway was the leading spirit in the planning and execution of the details of that meeting, and it was on the occasion of visits made to his home during that period of preparation that the acquaintance of a few years before ripened into a friendship which the writer holds as a cherished possession.

Mr. Holloway was not allowed to remain idle—but a few months. Almost immediately he was secured under a seven years' contract on favorable terms by the firm of H. R. Worthington, hydraulic engineers of New York City. His duties there were various in all lines of business, estimating, contracting, repairs, and design. Upon the expiration of his contract, in 1894, after a summer of rest, he became connected with the Snow Steam Pump Works of Buffalo in a somewhat similar relation, and remained with them until the time of his death.

Referring now to his relations as a member of the American Society of Mechanical Engineers, Mr. Holloway joined it among the early charter members, and was present at its first large meeting for the reading of papers held in the auditorium of the Turf Club in New York City, in November, 1880. His active influence in the Cleveland Convention has been above referred to, and he served as manager upon its Council during the trying early years from 1880 to 1883, and was elected president of the Society in 1884 to succeed Prof. John E. Sweet. This made him the fourth president of the Society. Upon his coming to New York in 1887 he was at once appointed to the laborious duty incident upon service upon the Society's Finance Committee; and upon the passage of the amendment to the rules which made the past presidents members of the Council of the Society for life, he assumed the responsibility of this work most cheerfully, and was one of the most regular in attendance upon the meetings of that body. He was one of the special committee entrusted by the Council with the consideration of the important step undertaken in the winter of 1890 of deciding upon the policy of a permanent home or Society House, and although his attitude was distinctly conservative, it was wisely so, and he yielded at once to the cogency of arguments which lead to the purchase of the premises at No. 12 West Thirty-first Street, and he was one of the incorporators of the Mechanical Engineers' Library Association, who hold the real estate. He was of invaluable service in carrying through a troublesome complication which arose at the moment in which the property passed into the hands of the Library Trustees, and was full of delight when the outcome was favorable to what he considered the best interests of the undertaking.

But it was at meetings of the Society that his warm interest and unselfish devotion to its welfare was most manifest. There are few who will not recall how painstaking was his devotion to the broadening of the acquaintance of members of the Society with each other. Early and late his tactful address, his genial and humorous speech, his assiduous looking after the shy and retiring, must be memories which will lie in many hearts. When in 1890–91 it was decided to hold reunions of members and their families, for the purpose of developing acquaintance and cementing the bond among the members, at the Society rooms, he was rarely absent and always full of helpful suggestions. In fact, if a personal reference will be permitted, the writer would say that there were few, or none, among the members or officers of the Society to whom he went more frequently for counsel and suggestion, or whose advice, freely and wisely given, has been more often taken than that received from Mr. Holloway. In this respect the American Society of Mechanical Engineers will perhaps never know how much of its prosperity during these last ten years is to be attributed to his thought and planning. In this relation he will be sorely missed.

Shortly after his coming to New York City the project was started by Prof. Thomas Egleston, Mr. James C. Bayles, and better equipped. The early training in expedients for doing work was here made to tell for the interest of those for whom he was working, and the application of portable machinery to operate upon massive work was one of the fundamental features of this achievement.

He was ably seconded in his endeavor by his choice of most capable lieutenants in his foundry and in other departments, so that it was a boast, which the result justified, that they could cast a blowing engine fly-wheel with an accuracy and success such that, when in place and revolving, the unfinished casting would run as true as the finished fly-wheels of competitive establishments. Mr. Holloway conducted these works until 1887, when they were sold out on favorable terms to the Cleveland Ship Building Company, leaving Mr. Holloway free to look for another opportunity for his energy. It is during this connection with the Cuyahoga Furnace Company that the successful meeting of the Society was held in Cleveland in the spring of 1883. Mr. Holloway was the leading spirit in the planning and execution of the details of that meeting, and it was on the occasion of visits made to his home during that period of preparation that the acquaintance of a few years before ripened into a friendship which the writer holds as a cherished possession.

Mr. Holloway was not allowed to remain idle—but a few months. Almost immediately he was secured under a seven years' contract on favorable terms by the firm of H. R. Worthington, hydraulic engineers of New York City. His duties there were various in all lines of business, estimating, contracting, repairs, and design. Upon the expiration of his contract, in 1894, after a summer of rest, he became connected with the Snow Steam Pump Works of Buffalo in a somewhat similar relation, and remained with them until the time of his death.

Referring now to his relations as a member of the American Society of Mechanical Engineers, Mr. Holloway joined it among the early charter members, and was present at its first large meeting for the reading of papers held in the auditorium of the Turf Club in New York City, in November, 1880. His active influence in the Cleveland Convention has been above referred to, and he served as manager upon its Council during the trying early years from 1880 to 1883, and was elected president of the Society in 1884 to succeed Prof. John E. Sweet. This made him the fourth president of the Society. Upon his coming to New York in 1887 he was at once appointed to the laborious duty incident upon service upon the Society's Finance Committee; and upon the passage of the amendment to the rules which made the past presidents members of the Council of the Society for life, he assumed the responsibility of this work most cheerfully, and was one of the most regular in attendance upon the meetings of that body. He was one of the special committee entrusted by the Council with the consideration of the important step undertaken in the winter of 1890 of deciding upon the policy of a permanent home or Society House, and although his attitude was distinctly conservative, it was wisely so, and he yielded at once to the cogency of arguments which lead to the purchase of the premises at No. 12 West Thirty-first Street, and he was one of the incorporators of the Mechanical Engineers' Library Association, who hold the real estate. He was of invaluable service in carrying through a troublesome complication which arose at the moment in which the property passed into the hands of the Library Trustees, and was full of delight when the outcome was favorable to what he considered the best interests of the undertaking.

But it was at meetings of the Society that his warm interest and unselfish devotion to its welfare was most manifest. There are few who will not recall how painstaking was his devotion to the broadening of the acquaintance of members of the Society with each other. Early and late his tactful address, his genial and humorous speech, his assiduous looking after the shy and retiring, must be memories which will lie in many hearts. When in 1890–91 it was decided to hold reunions of members and their families, for the purpose of developing acquaintance and cementing the bond among the members, at the Society rooms, he was rarely absent and always full of helpful suggestions. In fact, if a personal reference will be permitted, the writer would say that there were few, or none, among the members or officers of the Society to whom he went more frequently for counsel and suggestion, or whose advice, freely and wisely given, has been more often taken than that received from Mr. Holloway. In this respect the American Society of Mechanical Engineers will perhaps never know how much of its prosperity during these last ten years is to be attributed to his thought and planning. In this relation he will be sorely missed.

Shortly after his coming to New York City the project was started by Prof. Thomas Egleston, Mr. James C. Bayles, and others, to form in this city an organization mainly social in its character, which should form the nucleus for greater union among engineers. This idea took shape in the Engineers' Club of New York City, and while it is foreign to the present purpose to refer at length, or in detail, to its history and prosperity, it may yet be said with truth that Mr. Holloway was never forgetful of the opportunity which this organization has given to advance the cause of the engineer, and that as a member of its Board of Management, as its president, and serving it on its exacting committees, he was a most indefatigable, faithful, and wise councillor.

Perhaps no better idea can be given of the genial, inspiring, and able way in which Mr. Holloway devoted himself to the pleasure of others than by quoting from one of the little speeches which he threw off incidentally, as it were, and like sparks from the anvil of his regular work, in connection with one of the evenings at which the mechanical engineers convened in 1891. The Society had recently received a gift from Professor Egleston of the colonial dining table which had belonged to Robert Fulton, and which had been the starting point for giving to one of these evenings the complexion of reminiscences of Fulton and the early development of steam-boating in America. In speaking of the table and Fulton's relation to it, he said:

"We engineers who, in late years, with all the resources of good tools and variety of material at our command, have made sad and lamentable failures, can well imagine what must have been the trials and difficulties under which Robert Fulton struggled when he first sought to solve the problem of steam-driven boats on river and sea. What would our friend here, Andrew Fletcher, whose swift-moving steamers have since proudly tossed from their bow, at the rate of twenty miles an hour, the same waters through which Fulton's *Clermont* struggled at the rate of five miles, have thought if he had been shown a board pile and had been asked to make out of it a steamboat boiler, as Fulton had to do? I dare say our friend well remembers when the widest sheet of boiler plate that could be procured was but 26 inches; but $\frac{3}{16}$-inch iron plates 26 inches wide were far better stock from which to make boilers than wooden staves bound together by bands of iron, as were those on Fulton's first boat.

"No doubt engineers in the old times, as now, were wont to take to the home circle the cares and vexations of their business, and no doubt there were days when, after a night of restless tossing, trying in some way to scheme out a remedy for some new and unexpected difficulties, our hero sat him down to that table, his usual genial good humor gone, and with few words for wife and children, and leaving his scarce tasted food, he walked out, as has many another, to take up anew the battle of life.

"But let us put that picture aside. Look at the old table now; it is set for a grand supper; its broad surface is loaded with the old-time elements that go to make up a feast, for in that good old time a banquet table had on it much besides a bunch of flowers and a few empty plates. See the quaintly dressed neighbors who come crowding in to take their place at the table, and to honor their friend and host whose newly built steam-moved boat has made the round trip to Albany and back inside of four days, and as they shake the hand of the master and congratulate him on his great success, they little dream of the grand future of which that day's performance was the beginning. . . .

"But listen again: The genial host rises to respond. Thanking them for all their good wishes, in modest tones he is telling them something of the trials and disappointments he had encountered in the past; and that harder than all else to bear, had been the cruel jeers of those whom once he had counted among his friends, but who, seeing his persistency in his purpose, had turned from him with bitter words. He is telling his guests that, impelled by a belief that he would at last succeed, he could not turn back, but now that the hour of his triumph had come he had only the kindliest feelings toward all. He tells them that beyond the present he sees the time coming in which not only the waters of the noble Hudson, but those of the beautiful Ohio and the mighty Mississippi as well, would be dotted over with steamboats carrying to and fro the wealth and products of an immense empire, and that on the ocean the steamship would bear messages of peace and good will to all lands; and that long after they had all passed away, thanks to the labors of the coming engineers, the white flag of a peaceful commerce would cement in a bond of one common welfare all the nations of the earth."

Another example, in his most charming vein, he rewrote for *Locomotive Engineering* after presenting it at a "locomotive evening" in the series of Society reunions. I quote it, with his permission, in the form in which it was used by Mr. Jas. F. Lewis in his most appreciative memorial read before the Institute of Mining Engineers.

"It was a little thing—simply a small picture of an old-style locomotive placed in the middle of a page of a technical journal . . . . and a line below it which read as follows : 'Old Cuyahoga Engine, Built at Cleveland, Ohio.' . . . .

"The pictured engine might be the 'Reindeer,' 'Antelope,' 'Leopard,' or any other of the fleet engines designed by Ethan Rogers ; but no matter which one it was, it was, in its day, a beauty and a runner. It looks light, the engineers of to-day will say. Well, it was light, and fortunately so ; for the road on which it had to run was made of light iron rails, in many places spiked to slabs that lay on top of the ground, with neither ballast under them nor ditches beside them ; and many a time did the engines come into the round-house, after heavy rains, clay-washed from truck to top of smoke-stack. Those new roads were not only unballasted, but they were so uneven that had not the engines been lightly built and of the best wrought-iron, they would have wrenched themselves to pieces on the roads they had to travel on.

"Those were pioneer days for railroads in Ohio. The few and newly built roads were mostly through the woods and swamps, having a single track, with infrequent sidings, but with plenty of wet-wood stations in the winter and plenty of dry-water stations in the summer, and telegraph-lines at no time ; but the engines—they were daisies ! . . . .

"I suppose, if any of the engineers of to-day, the fellows who run the big moguls or the consolidations or the flyers on the limited, should happen to see this picture, they would wonder among themselves what that curved arm near the air-chamber of the pump was for—that is, if they happened to know that pumps were at one time used on locomotives ; and they would wonder why two valve-stems came out of the steam-chest. But you and I know that the curved arm worked the independent cut-off valve that Rogers put on the 'Cuyahoga engines,' and which helped to make them famous in their day ; for the vim with which they would start a heavy train, and the economy with which they used steam while under way, used to astonish the down-East engineers who came out West, later on, with their heavier-built engines.

"Many and long were the disputes and discussions of the men who used to run and swear by the 'old Cuyahoga engines' as to their superior merits, as compared with engines brought from the Eastern shops and run on the same or adjoining roads ; and oddly enough did they settle it. When differences now exist as to the superiority of one make of locomotive over another, the settlement of the question is left to scientific experts, who are usually professors of mechanical engineering in some college or technical school, who proceed to lash students to the front of the engine, one on each side of the cow-catcher, furnishing them with levers, pulleys, strings, indicators, stop-watches, etc., with instructions to take cards from the two steam-cylinders under the varying conditions of load, speed, and grade. The observers come back from the trip with their hair full of dust and cinders, their faces marked with grime, and their hats full of slips of paper covered with curved lines, all differing from Hogarth's line of beauty. Over these curved lines grave professors then solemnly ponder, accounting as best they may for their sinuosity, and guessing at what they cannot explain ; after which, with the aid of planometers, scales, and logarithms, they figure out that one engine is better than the other.

"Not so were settled the questions as to which locomotive could pull more, steam better, run faster or hang on longer, in the days in which flourished the old Cuyahoga engines. There were good talkers among the runners of those days, who were not afraid to express, in language often more expressive than polite, what they thought in favor of their own engines, or in disparagement of others; and many a summer day was made warmer as a group of engineers on the shady side of the round-house whittled, bragged, and bantered each other. Once, after an unusually warm debate over the performance of a newly arrived Eastern engine, as compared with a pet engine built at the 'old Cuyahoga,' it was decided to have a trial of the two engines in order to settle the matter.

"The consent of the master-mechanic having been obtained, a trial was arranged, which, in every respect, differed from the trial-trips as now made and above described. What they wanted to know was, which of the two engines, having the same quantity of wood and water, could go the farther on the same day and over the same track? So it was arranged that the 'Cuyahoga engine' and the Eastern or Yankee engine, as it was called, should both start on an equal footing from Columbus, and run as far as they could towards Cleveland without replenishing. It may be well understood that each engine was put in the best possible trim, and each engineer and fireman was at his best. Along the line at every town were gathered the railroad men, from the wood-sawyer to the station-agent, to greet and cheer their favorites as they rolled along northward, until, at last, the Eastern engine struck the descending grade several miles outside of Cleveland, and by its aid managed to crawl into the depot, bereft of wood, water, and steam. Then the query was, Where was the 'Cuyahoga engine,' of which so much was expected? had it gone dead and cold somewhere back in the woods, and would another engine have to be sent out to drag it in, lifeless and disgraced?

"For a while it looked blue for the Cleveland boys, but not long; for soon their pet engine was seen bowling down the grade, and, as it neared the depot, the crowd parted to clear the track, when the engineer motioned to open the switch leading to the Lake Shore track. Then, with a defiant blast of victory, it dashed between the long lines of spectators, turned its front towards Buffalo, and, climbing the heavy eastward grade, the backwoods engine rolled on, and never stopped until it reached Painesville, thirty miles away, and, like Sheridan, won the day. Such a test would not at this time be deemed at all scientific, or perhaps satisfactory; but it settled the dispute years ago, when the trial-trip was run from Columbus to Cleveland.

"The shops from which these engines came were the first in which locomotives were built in the West; and they had few or none of the appliances with which the present locomotive-works are so well supplied. They were situated on the banks of the Cuyahoga River, with no tracks near on which to place the engines after they were completed; and many a man would have shaken his head, had he been asked to build engines in such a shop and with such tools, and then to take them over a rickety pontoon-bridge in order to deliver them on a railroad track. But Ethan Rogers had the genius to manage it, and the pluck to dare it.

"What a time it used to be, when it was noised about town that Rogers was going to take a new locomotive over the bridge! and what a job it was to get it up out of the yard into the street, and to run it around there on an improvised turn-table! After this was accomplished, long timbers were laid across the old pontoon-bridge and a short distance on the opposite bank. In the meantime, steam had been raised in the boiler, and the crowd of spectators driven from off the bridge, and the street cleared for a run which might result in reaching the other side, or in sinking bridge and all to the bottom, just as luck, or skill, and the coolness of Rogers at the throttle might decide. At last the decisive moment is come; and, with a shriek that might indicate defiance or despair, the throttle is opened and the engine makes a dash at the bridge, which, feeling its weight, begins to sink deeper and deeper, as the spectators hold their breath and wonder why he don't go faster; but Rogers has done it before, and he will do it again. Nearing the opposite end of the bridge, with the water behind him awash on the pontoons, and the sinking track showing a sharp up-grade before him, he pulls the throttle-valve to its widest notch, and the spurred engine, leaping as if for life, with a breathing exhaust that tells of the struggle it is making, climbs up from off the sinking bridge, and lands on the bank safe and triumphant."

But this memorial grows too long and is likely to trespass upon what others would like to say in regretful memory of their friend. We all have known of lovely men; we all have known strong men. It is not given to many to combine strength with grace and loveliness; to combine decision of character with a persuasive manner; and, above all, to own and to exhibit the loveliness and purity of personal character which have made all who knew Mr. Holloway justly proud to claim him as their friend.

DCCXXIII.

MEMORIAL SESSION IN HONOR OF THE LATE J. F. HOLLOWAY.

(Founder of the Society and Past President.)

NOTE BY THE SECRETARY.—It was thought by some of the many friends of the late J. F. Holloway that the debt which the American Society of Mechanical Engineers owed to the devoted interest which he had taken in it made it fitting that more than the usual memorial monograph should be provided for at the convention of the Society which followed his death. There were many who would value an opportunity outside of the regular business of the convention to record their affection and admiration for him.

In view of the rights of others, however, it seemed unwise to devote a regular session of a busy convention to a matter of personal character like this, so that it was arranged to hold an extra or voluntary session at a time not otherwise assigned, at which only those interested need be present. This was held at 3 P.M., Wednesday, December 2, 1896, and so sincere and admirable were the tributes presented that they have been gathered together into the following form. The session was called to order by Prof. John E. Sweet, who had preceded Mr. Holloway in the presidential office, and was opened by the memorial monograph, No. 722, read by the Secretary.

Mr. W. F. Durfee.—The poet Wordsworth once said:

> "There is one great society alone on earth,
> The noble living and the noble dead."

In recent years we have enjoyed the genial society and kindly counsel of a noble living man, who has gone hence and taken his appointed place among the noble dead. The scenes which once knew him will know him no more; but in the hearts of his friends his sterling worth has builded a monument which will endure forever. Earth has far too few such men. The forces of evil are so assertive in modern life, the greed for wealth at any price so eager, the rush and crush for place and power so terrible, that the friendship of a man so cool, calm, self-poised, able, honest, genial, just, and generous as he of whom we speak with poor and inadequate words, was as grateful and refreshing as "the shadow of a great rock in a weary land." My acquaintance with Mr. Holloway commenced in 1863, when he was the superintendent and mechanical engineer of the Cuyahoga Steam Furnace, and the friendship then begun grew with the rolling years and strengthened with the lapse of time; and in a somewhat broad experience of men, I remember no one who would give better counsel, or who seemed to have a broader foundation of that homely, old-fashioned, granitic rock of sterling character, *common sense*—the ability to do or say the right thing in the right way at the right time—than J. F. Holloway.

His character will always be an example and an inspiration to those who knew him, and his life-work an effective illustration of the possibility of attaining admirable results by means which modern engineers, despite the "*maxima cum laude*" of their diplomas, would regard as the perfection of the inadequate. Mr. Holloway was not the kind of man to quarrel with his tools; he regarded it as a duty to make the means with which he was provided do the work offered, and do it excellently. Obstacles with him were merely things to be resolutely encountered and triumphantly overcome; and now he has triumphed over all the ills of time in laying down the sacred burden of life so sturdily borne these many years. It has been said:

> " He most lives
> Who thinks most, feels the noblest, acts the best."

In this sense our friend's life was full and abundant, and I am confident that I do not exaggerate in saying that no man ever fulfilled the duties of his sphere of action with more honest, painstaking, and successful endeavor, and none ever better deserved that commendation which will surely be his, "Well done, good and faithful servant."

Col. E. D. Meier.—Mr. Holloway was remarkable for clearness of analysis. With the utmost patience he would weigh and scrutinize the action of a machine, and give to each member and each circumstance its due credit for the work accomplished. He understood fully before he attempted to describe, and then in words so plain and lucid told the story that conviction and concurrence were natural and easy to every one who read. What seemed doubtful before became self-evident from his simple words, and there was something genial, I might almost say poetic in his style, that made you feel that you wanted to be convinced, to be at one with him. And how his heart opened to friendship! To do true and honest work in the profession was a passport to his good opinion. Could anything be more touching and yet replete with most subtle and gentle wit than the celebration of the seventieth birthday of the Nestor of American Engineers which he planned and carried through? The tabooed "set speeches" were avoided, yet all friends were heard in mimic accusation and defence. Thus fun chose the words, and proud friendship gave the facts, and the tribute became more adequate and lasting than any "set speeches" could have made it.

How willing was he to be the butt in friendly tilt, and how skilfully he parried!

He has left us not to mourn, for to have known him can be only a happy and pleasant memory.

Dr. Charles E. Emery.—In the unexpected and somewhat untimely death of Past-President J. F. Holloway, all have suffered an irreparable loss. His was one of those rare characters who love to rule and ruled by love. He was always thinking of others rather than himself, the mark, according to Lord Chesterfield, of a true gentleman. We can hardly realize that he is not at this moment moving quietly among us, introducing one to another, and studying means and methods whereby we may be instructed or amused. He was ever the same in business and in private life, winning friends and making conquests in a genial, unobtrusive way which impressed all with whom he came in contact. We miss him as an engineer, as a valuable member of this Society who has several times served it officially, but, above all, we miss him as a friend; we miss him because we loved him, and we loved him because he first loved us.

Mr. Thomas D. West.—I was closely associated with Mr. Holloway for about six years, during his presidency of the Cuyahoga Steam Foundry Company of Cleveland, Ohio, and I feel privileged to lay claim to know something of his many virtues as a true man, mechanical engineer, and able manager.

Every man who labors to leave the world better than he found it, and encourages his fellowman to a higher life, as well as to render all the assistance in his power to those in distress or trouble, is deserving of recognition and gratitude at the hands of all believing in what is noble, grand, and true in man. My close association with Mr. Holloway under his able management of the "Old Cuyahoga" caused me to observe almost daily some new quality in his character to increase my respect and admiration for him.

Among the best things to be said of him is the great respect which all his employees entertained for him. His actions had proven to them all that they knew where to turn if in need of a true friend. Rank or station had very little weight with him, unless such had been secured by merit. He was a true American and a thorough believer in encouraging man to lift himself. A self-made man stood higher in his estimation than a king. He loved his fellowman and was constantly on the alert to do him good, and there are many living to-day who could testify to his aid as being that which started them on their road to success.

His interest in mechanical matters throughout the world and at his own works was unbounded. His nature was that of the true mechanic, and he always exhibited the greatest skill and unerring judgment in all his undertakings. Whatever he did always caused those under him to recognize his ability as a master hand, both as a mechanical engineer and manager. There cannot be too much said in his praise. The world is better for his having lived, and could there be only more like him than there are, the world would be much the better for it.

Mr. J. S. Lane.—I wish to add my word of tribute to the memory of Mr. J. F. Holloway.

We were from the same county in Ohio, and my acquaintance dates back to my boyhood. There are three points in his noble and well-rounded character that I desire to mention. First, his consideration of and kindness and helpfulness to young men. Pardon a personal allusion.

I well remember that with mingled feelings of diffidence and pleasure I showed him through a shop that I had charge of at the early age of twenty-two, and how happy he made me by a word of praise here and there, and a word or two of advice from his experience, given so graciously as not to seem like criticism. Two years later I visited the Cuyahoga Steam Furnace Co. works in Cleveland, and on asking Mr. Holloway for permission to go through the works, he not only granted it, but personally conducted me through very carefully. One remark of his comes to my mind. We stopped to look at a planer. A large casting was fastened by the side of the planer, on the floor, and a tool on an upright bolted to the planer table was going back and forth, planing the side of the casting. He remarked: "I don't see the sense of moving a ten-ton casting against a ten-pound steel tool.

Do you?" While at dinner in a hotel that day, Mr. Holloway laid his hand on my shoulder, and kindly asked me if I could come to his office at two o'clock. I went, and he said that after I had been in, the manager of the largest iron mine on Lake Superior had called, inquiring for a draughtsman and master mechanic, and that he had recommended me. It resulted in my starting for Lake Superior within a week. Many young men could give the same testimony of his thoughtful helpfulness. Some years later, when the American Institute of Mining Engineers were on a trip to the iron and copper mines of Lake Superior, it was my privilege to assist in showing them about some of the mines.

Just before the business meeting in the evening, Mr. Holloway came to me and said, "You will be elected a member to-night." I told him that I was more of a mechanical than mining engineer. He assured me that it was all right, and I was made a member, with Mr. Holloway's name first on the application.

My second point is the rare good combination of engineer and business man found in Mr. Holloway. He knew just where to stop finishing or putting on unnecessary work.

My third point is his loyal fidelity to trusts committed to him. He was a Christian gentleman in every sense of the word.

When in charge of the Cleveland Steam Furnace Co. he had several flattering offers to go elsewhere and with higher salary than he could expect where he was. His partner, Mr. Castle, having died, leaving his wife and family an interest in the works, Mr. Holloway declined all offers and stayed by the trust, and so did exceedingly well by the family of his late partner and all concerned. Mr. Holloway was a pattern man, and I for one feel that I have lost a good and kind elder brother.

Mr. Francis H. Richards.—There must, I think, be few among the members of this Society who do not, on such occasions as this, look back to their student days and remember with what respect they held the memory and works of the pioneers in the field of industrial engineering, such men as Watt, Stephenson, Brunel, Trevithick, Fulton, and many others who had then finished their work and laid down their burdens. What an inspiration it has been to many a young engineer to go over the story of the labors, the failures and successes, which made up in such large measure the lives of nearly all of those men, our eminent predecessors!

Our friend Holloway, who so many of us might well term

Among the best things to be said of him is the great respect which all his employees entertained for him. His actions had proven to them all that they knew where to turn if in need of a true friend. Rank or station had very little weight with him, unless such had been secured by merit. He was a true American and a thorough believer in encouraging man to lift himself. A self-made man stood higher in his estimation than a king. He loved his fellowman and was constantly on the alert to do him good, and there are many living to-day who could testify to his aid as being that which started them on their road to success.

His interest in mechanical matters throughout the world and at his own works was unbounded. His nature was that of the true mechanic, and he always exhibited the greatest skill and unerring judgment in all his undertakings. Whatever he did always caused those under him to recognize his ability as a master hand, both as a mechanical engineer and manager. There cannot be too much said in his praise. The world is better for his having lived, and could there be only more like him than there are, the world would be much the better for it.

Mr. J. S. Lane.—I wish to add my word of tribute to the memory of Mr. J. F. Holloway.

We were from the same county in Ohio, and my acquaintance dates back to my boyhood. There are three points in his noble and well-rounded character that I desire to mention. First, his consideration of and kindness and helpfulness to young men. Pardon a personal allusion.

I well remember that with mingled feelings of diffidence and pleasure I showed him through a shop that I had charge of at the early age of twenty-two, and how happy he made me by a word of praise here and there, and a word or two of advice from his experience, given so graciously as not to seem like criticism. Two years later I visited the Cuyahoga Steam Furnace Co. works in Cleveland, and on asking Mr. Holloway for permission to go through the works, he not only granted it, but personally conducted me through very carefully. One remark of his comes to my mind. We stopped to look at a planer. A large casting was fastened by the side of the planer, on the floor, and a tool on an upright bolted to the planer table was going back and forth, planing the side of the casting. He remarked: "I don't see the sense of moving a ten-ton casting against a ten-pound steel tool.

Do you?" While at dinner in a hotel that day, Mr. Holloway laid his hand on my shoulder, and kindly asked me if I could come to his office at two o'clock. I went, and he said that after I had been in, the manager of the largest iron mine on Lake Superior had called, inquiring for a draughtsman and master mechanic, and that he had recommended me. It resulted in my starting for Lake Superior within a week. Many young men could give the same testimony of his thoughtful helpfulness. Some years later, when the American Institute of Mining Engineers were on a trip to the iron and copper mines of Lake Superior, it was my privilege to assist in showing them about some of the mines.

Just before the business meeting in the evening, Mr. Holloway came to me and said, "You will be elected a member to-night." I told him that I was more of a mechanical than mining engineer. He assured me that it was all right, and I was made a member, with Mr. Holloway's name first on the application.

My second point is the rare good combination of engineer and business man found in Mr. Holloway. He knew just where to stop finishing or putting on unnecessary work.

My third point is his loyal fidelity to trusts committed to him. He was a Christian gentleman in every sense of the word.

When in charge of the Cleveland Steam Furnace Co. he had several flattering offers to go elsewhere and with higher salary than he could expect where he was. His partner, Mr. Castle, having died, leaving his wife and family an interest in the works, Mr. Holloway declined all offers and stayed by the trust, and so did exceedingly well by the family of his late partner and all concerned. Mr. Holloway was a pattern man, and I for one feel that I have lost a good and kind elder brother.

Mr. Francis H. Richards.—There must, I think, be few among the members of this Society who do not, on such occasions as this, look back to their student days and remember with what respect they held the memory and works of the pioneers in the field of industrial engineering, such men as Watt, Stephenson, Brunel, Trevithick, Fulton, and many others who had then finished their work and laid down their burdens. What an inspiration it has been to many a young engineer to go over the story of the labors, the failures and successes, which made up in such large measure the lives of nearly all of those men, our eminent predecessors!

Our friend Holloway, who so many of us might well term "our elder brother Holloway," always impressed me as naturally belonging to that company of pioneers who, beginning a century ago, laid so firmly the basis for that enormous extension of the industrial arts which is one of the glories of this present generation.

My acquaintance with Mr. Holloway began in 1882, and I well remember our first meeting at one of the sessions of this Society. Our acquaintance so casually begun soon ripened into a friendship which continued unbroken until he passed from among us. I have met Mr. Holloway in many different places and under varied circumstances, and he was always the same genial soul, and never seemed to lose that deep sincerity which was one of his distinguishing characteristics. Meeting him frequently in his own works at Cleveland, at the Civil Engineers' Club of Cleveland, at the conventions of this Society, and at its banquets and tours of inspection, I early found him to be a man with a many-sided experience, and always taking a healthful and progressive view of whatever scene lay before him.

When we remember how truly the progress of the world is controlled by the smaller and often silent forces—how the switch-point, so to speak, on the railway of time, rather than the engineers and conductors, determine by what route the train of progress shall travel, we may well wonder if, after all, the quiet and unassuming men like Holloway are not in fact the real pilots who have been, unconsciously or otherwise, determining the direction and the manner of the onward march of our modern industries.

Especially can I commend what has been said of Mr. Holloway's generous interest in the welfare of young men, and especially of such as gave promise of ability in engineering lines. Few who have known him will cease to miss him, and few there be who have known him who may not well emulate his example.

Mr. John Stanton.—In paying my tribute to the memory of our departed brother Holloway, I will refrain from attempting any biography or from recounting his professional experiences and triumphs. The beautiful memorial which our Secretary has prepared fully covers that ground, and any words from me on that point would be at this time entirely superfluous. But I will give you, in a few words, my own impressions as to his personal characteristics, which, after all, were the attractions which bound to him so strongly those with whom he came into close personal relationship. He was one of the most lovable of men, of a winning and gracious demeanor, and ever ready to help, by his knowledge and experience, any one who came to him for counsel or advice. Sincere in his professional statements, sincere in his business transactions, and sincere in his friendship, it is not strange that he gathered around him so many sincere friends. During the twenty or more years in which it has been my good fortune to enjoy his friendship, I have often had occasion to take counsel with him on professional matters, besides having had, from time to time, business transactions with him, and I have always found that the advice he gave me and the machinery he constructed for me were alike sensible and substantial—characteristic of the man.

Since the organization of the Engineers' Club in 1888, he took an active part in its management, having been its honored President for two years, and those of us who came into almost daily contact with him there can best appreciate the genial and graceful manner in which he performed the duties of his office and cared for the comfort and enjoyment of his fellow members; for he was not only one of the best of companions himself, but seemed to have the gift of promoting companionship and good feeling amongst others. Although he totally abstained from the use of stimulants, yet he found great pleasure in attending our feasts and other social gatherings, where he was wont to delight us with speeches replete with information and illumined by flashes of the most delicate wit and humor.

Mr. Holloway was a man who, in all the relations of life, acted well his part: as apprentice and workman in a shop, following his calling with intelligence and industry; as an employer, just and generous; as an engineer and business man, enjoying the confidence of the community; as an associate and a companion, beloved by all; while in his domestic life he was beyond reproach. Surely his character was entirely symmetrical. And yet, Mr. Chairman, Mr. Holloway had lived beyond the mark of three score years and ten, and although to those who were close to him he seemed to be still a strong man, in vigorous health, yet nature will have its way, and when the dread summons arrives there is no possibility of evading it. Our comrade is no longer with us in the flesh, but his example and memory of his kindly and sympathetic personality still remain with us, and I doubt not, sir, that in spirit he is still with this Society, in which he took so great an interest.

"So when a good man dies,
For years beyond his ken
The light he leaves behind him lies
Upon the path of men."

Mr. Robert W. Hunt.—It is with a sad heart that I seek to lay my tribute on the tomb of our departed friend. The engineer seeks to solve the problems of nature, understanding them never. He seeks to use those forces which are really so beyond his control. But of all problems presented to the human mind, what so great as that of life itself? and under the duties and the burdens of the wonderful condition in which we find ourselves placed, it is he who seeks to make those around him better and happier who is the best citizen and best serves that overruling power which has given this duty to all of us.

We of this Society, and particularly those of the older members, are somewhat like soldiers recalling their former campaigns; and so it is with all men and all conditions. Fortunately, it is the pleasant things which stand out prominently. The trials and the tribulations sink into insignificance. It is the successful repulse of the attack that is recalled. It is the overwhelming triumph of the conquering charge which is remembered, and it is the touch of the elbow of those faithful friends who made those things possible, which delight the recollection and the heart in retrospection. And so we of this Society, in looking back to those early days, to those friendships formed as this Society was organized and brought up to its present successful status, recall those dear ones gone who made it what it is. Think of the great engineer, the successful mechanic, the steadfast friend, Worthington; the brilliant, the lovable, and loving Holley; that heartful man of all-pervading humanity—Cox; and now the gentle, the affectionate Holloway. What a galaxy we have! I suppose, I know, that the younger members of this Society must, too, be forming those associations which, in after life, will be just as precious to them as these are to us. And it is right that it should be so. Were it otherwise, life would not be worth living. The dead are gone; we mourn the dead. But the living are here, and they are here to carry out the duties so well performed by the just dead. And can any of us ask that when the time comes for a tribute to be paid to us—and may we hope that it can be paid as we pay it to-day to the memory of Holloway—can we ask a higher tribute, a better epitaph than this—he was no man's enemy; he was a long-suffering, a forgiving, and a loving friend to all humanity?

Mr. Worcester R. Warner.—I rise to speak of Mr. Holloway as one who loved him, and yet in that position I am not unique, for, "To know him was to love him, to name him was to praise"; and you all know him—you have known him for many years—and you must all have loved him. I recall to-day the time when I first met him, away back in 1881. He was then President of the Civil Engineers' Club in Cleveland, and I was a newcomer in the city and was welcomed by him, and I remember from that time on his genial cordiality and the Christian spirit and lovable nature that he manifested everywhere. So I can see and you can see why we all loved him. I followed him in all these years. In fact, all the younger engineers have followed him and have willingly sat at his feet to learn, and I can recall many instances where he has made men better and made men happier, but I will mention only one that occurred in this room just a year ago now. A paper had been read—a paper in which the members were not interested. It was opened for discussion and nobody had anything to say, until Mr. Holloway, sitting at the other side of the room, stood up and asked the author of the paper some question about it, and made a pleasant little address referring to some interesting features of the subject, and that started the discussion. One member after another got up and spoke, and it was a very interesting discussion that resulted. After the meeting I went to Mr. Holloway and said: "I want to thank you personally for the kindness you have done to the author of that paper." And his genial reply I remember well. He said: "Oh, well, I didn't want the engine to get on a centre; I thought I would pry it over." That is all he did; he pried it over the centre and started the wheels running, and we were all happy, and the author of the paper was happy—thanks to this one man's tact and good heart and fine insight, which he always manifested wherever he was and in whatever associations he was found.

I recall the old quotation that we have heard from our childhood; we are hearing it very often, but it seems to me that I have never found the man to whom it was more truly applicable than to Mr. Holloway, and so permit me in conclusion to repeat to you the familiar lines: "His life was gentle, and the elements so mixed in him that Nature might stand up before the whole world and say, He was a man."

*Mr. Snow.** —My acquaintance with Mr. Holloway was rather of short duration, only intimately after we had been associated in business. We found Mr. Holloway a very able adviser and relied on his judgment in the conduct of our business, and we always found it to be very good. We not only profited by his advice in our business, but we all grew to love him and regard him as a very conscientious and able man in every respect. I shall never forget my feelings on the morning that I learned of his death. I was in Paris, France, at the time; just had arisen, and was dressing myself, when a cablegram reached me stating the fact of his death, and it was almost impossible for me to suppress the feeling of sorrow that came over me, and it practically upset me for the whole day. I am sure that all of the officials connected with our business felt in the same manner toward Mr. Holloway; we were all very much shocked by his sudden taking away. We do not feel that we shall ever secure a man that will be of as much service to us, and I assure you that we all regretted his death very much, for we not only looked upon him as a wise counsellor, but as a dear friend.

Mr. Hosea Webster.—During Mr. Holloway's connection with Henry R. Worthington, it was unfortunately seldom that I was thrown in contact with him, my connection with the company being through the Chicago office. But, of course, I was called from time to time to the main office, and was always looking for chances to get posted on everything that was going on—getting information as to the latest developments of the business, and I never failed to get the fullest and the most complete and cordial attention from Mr. Holloway. As those who are young in experience very well know, frequent complications, vexations often discouraging, would arise, and I always felt when in that position that I could go to Mr. Holloway, and that a very few words from him would clear away the clouds and make everything seem bright. I am sure that every young man who has heard the expressions of good-will and affection from those of you who have spoken this afternoon must hope that, when we have done our part as well as we know how, we can ask for no higher tribute than what has been heard to-day in connection with our

---

* Mr. Snow was Vice-President of the company with which Mr. Holloway was connected at the time of his death, and was present by invitation.—*Secretary.*

good friend, Mr. Holloway. I am sorry that there is not a representative here who could perhaps go into details and give you some anecdotes of the pleasant associations which existed between him and our company. One which I have heard several times would, perhaps, be interesting, and it certainly shows the character of two of the principal members of the Society whom we all love to honor. Years ago Mr. Holloway built for the city of Cleveland a pumping engine which in its details was very much like the duplex pump at that time made under Mr. Worthington's patents. Mr. Holloway, I am satisfied, from the way in which the anecdote has been told, was not acquainted thoroughly with the details of the engine as patented by Mr. Worthington. As you may know, a suit for infringement was instituted. It came to trial, and Mr. Holloway and Mr. Worthington, both present in the court-room, were eventually introduced to each other. Both were charming men, and, of course, had a charming talk, and I am told that Mr. Holloway said: "Mr. Worthington, if I had known you, I never would have built that pumping engine." Mr. Worthington, in his characteristic way, said: "Mr. Holloway, if I had known you, I never would have introduced this suit." The suit was then and there discontinued, and forever after they were the firmest and the warmest friends.

As I have said before, it seems to me that the expressions of tribute which have been given here to-day are the best monument, after all, which a man can have. If your friends speak so well of you when you are gone, what a joy, what a pleasure, it must be to your friends and your family! It certainly is an inspiration to young men to act with toleration and with the feeling that there are others who are struggling, that there are others who need your help and whom you may, even in the little things of life, often "help over the centre."

Mr. S. T. Wellman.—I would like to express my feelings, but I cannot put them in proper shape. My acquaintance with Mr. Holloway goes back over twenty years. I came to Cleveland a young man, and soon after I came there I became acquainted with Mr. Holloway, and the acquaintance commenced then has lasted all through these years and has been pleasanter every year. It was a great regret to me that when he moved to New York I could not see him as often as formerly, but whenever I did meet him the pleasure was greater, and he always had a good word and he always was full of reminiscences and was always inquiring for friends in Cleveland. When he came to Cleveland, he always called to see me, and it is needless to say that I always called on him when it was possible for me to do so here. I only wish that there were more men in the world like him. The acquaintance of such men makes life worth living.

Mr. John Platt.—I would like to add my little word of tribute as one of the younger members of this Society to one who was always to me a very dear friend. I met Mr. Holloway first in 1888, very soon after I came to this country. My father had had the privilege of knowing him for some time, and so I saw Mr. Holloway very soon after I came here. A little later I was with him at the meeting of this Society in Scranton, and we had a most delightful time, and he was then good enough to propose me as a member of the Society. Many of the older members here have spoken of Mr. Holloway as such a good friend to the young men of the Society, and I personally can speak of this. I used to call in to see him whenever I wanted to ask about anything, and he was always most kind and cordial, and I do not know of any one whose memory is so very dear as that of our friend Mr. Holloway.

Mr. W. S. Rogers.—This year I have met with two sad losses. One was my father; the other was Mr. Holloway, and I am sincere in saying that I felt the death of the latter as keenly as that of the former. I was associated with Mr. Holloway for a year, in a very trying position, where he was a tower of strength to me from daylight until darkness. He was the only one to whom I could go in fullest confidence, explain my troubles, and get encouragement which removed all obstacles. We have heard a great many things said of his kindness toward young men, and in the years I have known him he has continually been searching out bright young men in the places we have visited together. When I went with this Society on my initial visit, at the Nashville meeting, it was Mr. Holloway whom I met first and who inspired me, a greenhorn, with confidence, and put me at ease among the many wise and distinguished men there. A poor boy came to the Snow Pump Works to learn the machinist's trade; to be simply a machinist, and know how to use tools, was the height of his ambition. Mr. Holloway found him, and called my attention to the fact that "there was good stuff in that boy." A few evenings later the young man had an opportunity of meeting Mr. Holloway at my home, and the result of that evening's contact was the young man's entering a Western university for a four years' course in mechanical engineering, where he is battling his way through, fitting himself for a higher station in life than he ever dreamed of prior to meeting our departed, loved friend, who impressed on his memory forever the maxim, "Where there is a will there is a way."

Mr. E. H. Mumford.—It was my good fortune to be one of Mr. Holloway's young men. I am sorry to say I was not one of his bright young men to whom Mr. Rogers refers. I am conscious that I was a constant disappointment to Mr. Holloway. But for two years toward the latter end of Mr. Holloway's life I knew him almost intimately, when I came from the West to New York, and was constantly subject to his advice. I would like to quote here now some of the excellent things he told me to do, most of all in the last year of the two I have referred to, when it was my exceptional privilege to sit back to back and face to face with him for many hours of the business day at neighboring desks. It is especially of that last year that I would speak, when I say that it was Mr. Holloway's high standard of morality, his contempt for anything which was beneath the level of an engineer and a gentleman, and his admiration for everything which was the reverse of that that most impressed me. I had the misfortune to lose my own father in 1877. My father was a clergyman and the best man I ever knew, and I want to say here that in the very intimate personal relationship of that last year of the two that Mr. Holloway and I knew one another well, Mr. Holloway came nearer taking the place of my own father than any man ever has; and his influence, I hope, has counted for something. Mainly, it was his high ideal of everything in a moral and social way that impressed me.

Mr. J. D. Cox.—I think I am probably the only man here in the Engineers' Society who was an apprentice under Mr. Holloway. I worked for Mr. Holloway away back in 1868, at the time he was building that pump which the gentleman from the Worthington Company tells about, and I think it would astonish and worry every one of you here if you had to build that pump with the tools which Mr. Holloway had in that shop. There was not a single screw-cutting lathe in the shop that fed with a screw. They were all chain lathes—chain feed, and they were little bits of things and light. I think one of Mr. Holloway's peculiar characteristics was his ability to get out work without anything to do it with. I remember a job similar to the one Mr. Lane speaks about. It was a bed plate of this same pump, and the reason he didn't put it on the planer was, in the first place, that he could not get it on, and in the next place he could not get it to it—the shop was not big enough ; so we had to jack it down on the floor with jack-screws and run a big travelling arm out on the end of the planer, with a cross-head on it, and in this way bring the planer down to the job, and plane it off in that way on the floor.

Speaking of Mr. Holloway's characteristics, and the kindly way which he had in the shop—he came around where I was working one day with a little bit of a slotter and a great big engine crank, a great deal too big for the slotter and pretty near too big a job for me. I could not make the thing work satisfactorily. He saw I was in trouble, and he put his hand on my shoulder and said: "Young man, your machine will work better when it gets acquainted with you." I think that was the first time he had ever seen me, but his words were very encouraging, and I got along better after that. I have known Mr. Holloway ever since, and, like many other of the young men, I have gone to him many times for advice. I know well the circumstances which led Mr. Holloway to keep his old shop and the old tools. All of the owners of the establishment after Mr. Castle's death were ladies who were dependent upon the income from that establishment, and he could not make up his mind to spend money, which they needed to live on, for new tools, and he ran that shop until he could sell it; and when he did sell it he sold it well.

Dr. H. G. Torrey.—I would speak a word of Mr. Holloway in connection with the poetic and æsthetic side of his nature, which was so strong, which led him to do so much for others, including the ladies of our Society, and commend his action in bringing them into the sociable the year before last, which was of great benefit to them and to us. Thus the wives and sisters of our members were brought in closer touch with their professional work. (Applause.)

Mr. John T. Hawkins.—I did not expect to say anything on this occasion, for the very good reason that I do not feel competent to express what is within me regarding our late lamented friend and fellow member. As a member of the old school of engineers contemporary with him, I had a good deal of natural sympathy with Mr. Holloway in many ways. I have listened to his stories of his early experiences, and they applied themselves to my own early struggles with great force. We have had many private conversations on those matters, and particularly on his ability to produce work with the indifferent facilities peculiar to the early days. It has been said that in some respects Mr. Holloway might not be considered as a great engineer; but, sir, in one respect I think he was a very great engineer. It is the province of the engineer to remove physical difficulties from the pathway and progress of the race. In that sense Mr. Holloway was no insignificant engineer. But it appeared to be his peculiar province and his constant aim and study to remove difficulties and asperities from the pathway of engineers themselves, and as such I think he was a very great engineer. I think his work in this Society transcendently illustrates this most admirable feature of his make-up.

It had not been my privilege to know Mr. Holloway personally until shortly after the formation of this Society. I have since that time, however, met him a great many times in a most pleasurable way, and I desire to say this: that, so far as the Society of Mechanical Engineers is concerned, his ability as a man and an engineer among engineers has done as much for the success and life of this Society as any other member in whatever direction of activity that I could mention; and all because of the beauty of his character and the goodness of his heart.

Mr. James M. Cremer.—I would like to add a word to what others have said in the way of personal recollections of Mr. Holloway, with whom I was associated in business during the later years of his life.

I first met Mr. Holloway some ten or twelve years ago at a meeting of the Engineers' Club in Cleveland, Ohio, of which he then was President. In this position one could not fail to note his easy, genial manner and happy mode of speaking, so full of wit, good nature, and an indescribable personal charm which won him hosts of friends, especially among the younger men, many of whom will recall his kindly interest in their welfare and his helpfulness and encouragement in the difficulties and perplexities which all must meet and overcome.

Mr. Holloway was, also, always deeply interested in the affairs of our own Society, and no one who met him here could fail to note the delight he took in all our proceedings, and how much of his best thought was given to insure their success.

He also was instrumental in adding many new members, and I recall that on one occasion in 1885 Mr. Holloway visited the works in Cleveland where I was located, and suggested to me the idea of joining the Society. He said membership in such a Society and the contact with other minds was a good thing for us all, taking us for a while out of our daily routine, where, if left to ourselves, we were apt to wear our own little rut so deep that at last we would not see over the side of it. He remarked, casually, on this occasion that they had made him President of the Society, that some of the members had thought it well to select a Western man for the office, and so it had come to him. The remark was characteristic of the man, for we all know his ability and eminent fitness for the office of President, but his modesty in this matter was simply the way he regarded himself in other lines as well.

On many occasions I have noticed at our meetings his efforts to promote a better acquaintance and fellowship among the members. He seemed never to think of himself or his own enjoyment, as such, but would go about in his quiet, unobtrusive way, picking out the strangers and the retiring ones, and making them feel at home.

He was, also, always ready, and with unfailing tact, to take part in any discussion, especially one that seemed to lag, to drift away from the subject, or likely to wax a little too warm. His quick wit, ready sympathy, and wide knowledge made him in a rare degree capable of bringing to every emergency the influence of a "word fitly spoken" and to pour oil upon the troubled waters.

Shortly after meeting Mr. Holloway in Cleveland, I became connected with the then firm of Henry R. Worthington, and a few months later was greatly pleased one day to find that Mr. Holloway was bidding farewell to Cleveland and was coming to New York to be with us.

I was among the first to welcome him when he entered upon his duties here, and was closely associated with him for about seven years. We were always the best of friends, and I owe more to his support, appreciation, and influence than I can ever estimate or express. It was a rare privilege to be associated with such a man, and I have felt impelled by a sense of the debt of gratitude to him to add these few words, regarding matters of our ordinary, every-day work, to what has already been said by those who knew Mr. Holloway in other days and in other lines.

Mr. Holloway was an instance of the rare combination in one man of great business and mechanical development. He could, on occasion, assume general charge of the office or of the works, and discharge either duty with equal success. He was one of the best and most thorough mechanics I ever knew, and possessed the greatest amount of strong common sense in engineering matters; and common sense, to my mind, is by far the most important ingredient in an engineer's composition. He was also an excellent business man, of sound judgment, correct principles, and strict integrity of the old-fashioned sort. One could rely implicitly upon whatever he did being right in every particular.

Such a man makes an ideal manager. His associates and subordinates respect him for his exact knowledge in mechanical and business matters, and they feel that his decisions will always be intelligently given, and with justice to all concerned.

Of his engineering abilities I had the highest regard, and wish that some one else of greater knowledge than myself might adequately treat this part of the subject.

Speaking only of my own experience, however, I might say that during all the years Mr. Holloway and myself were thrown together I had occasion in connection with my duties to consult with him regarding the selection and purchase of the varied supplies needed for our large works, including new machinery, engines and boilers, making contracts for new buildings, extensions, improvements, and other contract work of various kinds; in all of which matters, shop experience, engineering skill, and business knowledge were needed for satisfactory results. My instructions were, in all these things, to confer with Mr. Holloway as much as possible, and I always found his advice of the greatest service. His intellect was remarkably clear. He seemed to locate so easily the weak points and defects of a thing that the benefit of his judgment was something I prized, nor was I ever disappointed with the result when I followed it carefully.

But, after all, it was the lovely personality of the man, his beautiful character, which stands out prominently before all else, and the thought of which is filling our minds and hearts to-day. Although he only rarely spoke of such things, one could not fail to realize that what he did and was had its source and inspiration in a power higher and stronger than his own. I remember so well the kind and comforting letter he wrote me a few years ago, when my father died very suddenly and trouble had come upon me in other ways. Mr. Holloway said in conversation afterwards, regarding sudden death, that one should be always ready and

and his hospitality. But for two or three hours it was impossible for me to get away from him. I was shown the same attention which probably I would have been shown had I been the president of a railroad or the president of some scientific society. I found out enough to appreciate what he was doing. I was shown into the innermost parts of the interesting process as it was carried on in those days. I was not alone shown the successes, but I was let into the secret of failures, of mistakes, and the hard road over which he had travelled, and it was with great difficulty that I left him rather than increase the debt of gratitude which I owed him. My next stopping place was in the neighborhood where the present Chairman resides, and I was there shown attention which I never have forgotten. My next stopping place was in Cleveland, and knocking at the door of the Cuyahoga Works—it was small then—I was finally introduced to Mr. Holloway. I think he was then manager. I was most cordially received and shown what he had to show and finally landed in the drawing room—that inner sanctum sanctorum where men seldom take strangers. They were then building the *Amazon*, which has just been spoken of. She was a sort of double-keel craft, and he was very glad to get some information, as it afterwards turned out, about double keels, because we had one boat of that description—the *Pawnee*, I think—in the service. The *Amazon* was being built for the lakes, and there were some problems about valve gear regarding which he was very glad to make use of what information he could get from me. But for all the time which he expended on me he had nothing whatever to gain, and it was only for an instant that I was perhaps able to contribute anything for his benefit or to his knowledge. I allude to it because it showed the character of the man in dealing with a perfect stranger, in dealing with a person who possibly would not be able to comprehend what he was saying. And he certainly had big problems on hand, particularly when we consider that he was without tools and facilities, as we understand this afternoon. And my prophecy at that time, which I am glad now to be able to say has been certainly fulfilled, was that he was one of the coming men.

The Athenian philosopher Plato lets us into the closing scene of Aristotle's life when he, at the last, summoned those about him and in language of unfathomable pathos said: " When I leave this body, do not say that I am dead. Say that I live, I am not dead." When the military telegraph flashed to those of us who were in the front in 1865 that Lincoln was assassinated—that Lincoln was dead, we said, No, Lincoln will live forever. What was it in Lincoln's career that lives forever, if not the qualities which, this afternoon, have been paramount in everything that has been said? It is not engineering which has given Mr. Holloway his standing in the hearts of this Society and in the heart of every man who ever met him. They were higher qualities—qualities which we can do well to emulate. Lincoln never could die. Neither can Holloway's memory ever die.

Mr. Allan Stirling.—I will not trespass on your time but for a moment. The word Christian has been used more than once in reference to Mr. Holloway. I have not seen Mr. Holloway for nearly four years. I have been away. Shall I never see him again? Perish the thought. Mr. Holloway was a Christian man, and through the mediation of Him to whom he looked for an example, I hope to meet my dear friend in the better land.

The Chairman.—In adjourning this meeting, I wish to say that we only pay a just tribute to one of the sweetest lives that we ever knew.

PAPERS

OF THE

HARTFORD MEETING

(XXXVth)

MAY 25th TO 28th, 1897.

PAPERS

OF THE

HARTFORD MEETING

(XXXVth)

MAY 25th TO 28th, 1897.

DCCXXIV.

PROCEEDINGS

OF THE

HARTFORD MEETING

(XXXVth)

OF THE

AMERICAN SOCIETY OF MECHANICAL ENGINEERS,

May 25th to May 28th, 1897.

LOCAL COMMITTEE OF ARRANGEMENTS.

Chas. E. Billings, *Chairman*.

J. M. Allen,
F. B. Allen,
C. F. Bailey,
A. F. Bardwell,
Geo. M. Bond,
A. S. Cook,
W. L. Cheney,
C. J. Ehbets,
L. C. Grover,
John H. Hall,
J. B. Henney,
Chas. P. Howard,
J. S. Hunter,
H. K. Jones,
A. M. Lane,

F. C. Billings, *Secretary*.

J. P. Lewis,
E. J. Murphy,
C. E. Newton,
E. G. Parkhurst,
J. J. Peard,
T. C. Perkins,
F. A. Pratt,
F. C. Pratt,
A. D. Quint,
F. H. Richards,
H. W. Smith,
H. Souther,
W. N. Stone,
W. H. Stratton,
C. H. Veeder.

RECEPTION COMMITTEE.

J. H. Hall, F. C. Billings, J. M. Allen.

EXCURSION COMMITTEE.

Geo. M. Bond,
A. F. Bardwell,
L. C. Grover,
Henry Souther.

The XXXVth meeting of the American Society of Mechanical Engineers took place in the city of Hartford, Conn., beginning on Tuesday, May 25, 1897. The meeting was a notable one in one sense, in that it was the first which was held after the adoption by the Council of a policy definitely discouraging the practice of waiting for an invitation from any city before deciding to hold a convention there. It was felt by the Council that it was neither right nor wise for the members resident in any city to have forced upon them anything in the way of obligation for the entertainment of the members of the Society at costly outlay such as must necessarily be felt when the local membership had taken upon themselves whatever might be involved in issuing a formal invitation to the Society. This latter had been the custom which had prevailed generally for the meetings which had been held hitherto, but it had been increasingly obvious that the growth and the size of the meetings, consequent upon the growth of the Society, and the natural desire that each meeting should surpass the previous ones in the memory of those who were present were making the former custom dangerous and even impossible. This had induced the Council to decide that from that date the Council would itself decide at what city and in what district it was desirable that a meeting should be held, and notify the members resident in that city of such decision if it was agreeable to them. By this procedure it is believed that all financial obligation and responsibility are removed from the local membership, except in so far as local or civic pride may prompt spontaneous and self-originating courtesies.

The city of Hartford was selected by the Council by reason of its being a city in the centre of manufacturing interests of New England and by reason of the special attractions which the city itself offered. The opening session was convened in the evening of Tuesday, May 25th, in Unity Hall on Pratt Street, between Trumbull and Main, which had been rented for the sessions of the Society, and was opened by a few words from Mr. C. E. Billings, Chairman of the Committee of Local Members. Mr. Billings concluded by introducing the Mayor of Hartford, the Hon. Miles B. Preston, who addressed the meeting in a few fitting words, to which Mr. Worcester R. Warner, the President of the Society, made happy response. After announcements concerning the conduct of the meeting a recess was taken, and an enjoyable reunion and conversazione was held in a lower hall in the same building. The hotel headquarters were opened in Room 10 of the Allyn House, and it was at once apparent that the meeting was to be a largely attended one.

SECOND SESSION. WEDNESDAY MORNING, MAY 26TH.

The first regular session of the meeting was opened by President W. R. Warner in the chair, in Unity Hall, at ten o'clock for the usual routine business of the convention. The Secretary's register showed the following named persons in attendance, together with a large number of guests connected with the manufacturing interests of the city, who had been invited by the resident membership. The usual large number of ladies was also in attendance, numbering upwards of seventy in all.

Alden, G. I.
Aldrich, W. S.
Allen, Francis B.
Allen, Jeremiah M.
Allison, Robt.
Almond, Thos. R.
Ames, Wm. M.
Anthony, Gardner C.
Auchincloss, W. S.
Bagg, Sam'l S.
Bailey, Chas. L.
Bardwell, A. F.
Barnes, Abel T.
Barnum, G. S.
Barr, John H.
Bates, Ed. P.
Beach, Giles.
Beach, C. S.
Bigelow, Frank L.
Billings, C. E.
Billings, Fredk. C.
Binsse, Henry.
Bird, W. W.
Blackburn, Arthur H.
Blood, John B.
Bond, Geo. M.
Bowen, E. S.
Boyer, F. H.
Bristol, W. H.
Brown, Alex. T.
Brown, R. S.
Buchanan, A. W.
Bulkley, Henry W.
Bullock, M. C.
Burgess, C. M.
Burgdoff, Theo. F.
Butcher, J. J.
Caldwell, A. J.
Carney, Chas. J.
Cary, A. A.
Cassier, Louis.
Chase, H. S.
Chase, W. L.
Cheney, W. L.
Christensem, A. C.
Church, E. D.
Cogswell. W. B.
Colvin, F. H.
Cook, A. S.
Cullingworth, G. R.
Davis, Isaac H.
Deane, C. P.
DeLancey, Darragh.
Detrick, J. S.
Dinkel, Geo.
Ehbets, C. H.
Evans, H. O.
Faber Du Faur, A.
Flagg, Stanley G.
Flinn, T. F.
Foster, E. H.
Francis, H. C.
Freeman, John R.
Frith, A. J.
Fritz, John.
Galloupe, F. E.
Gantt, H. L.
Gorton, John G.
Gray, Thos.
Green, S. M.
Griffin, C. L.
Grimm, Paul H.
Grover, L. C.
Gulowsen, G. A.
Haines, H. S.
Hall, John H.
Halsey, F. A.
Hartness, Jas.
Heggem, Chas. O.
Henney, J. B.
Henney, John.
Henning, Gus C.
Hibbard, Henry D.
Hill, Wm.
Holmes, W. G.
Howard, Chas. P.
Howe, Henry M.
Humphrey, John.
Hunt, C. W.
Hunter, J. S.
Hutton, Fred'k R., *Sec'y.*
Isbell, H. L.
Jacobus, D. S.
Jarvis, Chas. M.
Jenkins, M. C.
Jennings, E. L.
Jones, H. K.
Kempsmith, Frank.
Kent, Wm.

King, Chas. C.
Kingsbury, Albert.
Laforge, F. H.
Lambert, W. C.
Lane, A. M.
Lewis, J. P.
Lewis, D. J.
Libby, Sam. H.
Lieb, John W.
Logan, John D.
Loomis, F. J.
Loring, Chas. H.
Low, Fred R.
Lowe, W. V.
Lyall, Wm. L.
McBride, Jas.
Manning, C. H.
Manning, H. G.
Mason, Wm. B.
Matheson, W. G.
Meatz, John T.
Mead, F. S.
Melvin, D. N.
Mesta, Geo.
Meyer, H. C., Jr.
Miller, H. B.
Morris, H. G.
Mossberg, Frank.
Moulthrop, Leslie.
Muller, M. A.
Murphy, E. J.
Newcomb, Chas. L.
Newton, C. E.
Park, W. R.
Parker, L. H.
Parkhurst, E. G.
Parks, E. H.
Parsons, Fred W.
Pascall, R. H.
Paul, John W.
Payne, S. F.
Peard, J. J.
Perkins, T. C.
Philip, C. von.
Pratt, Chas. R.
Pratt, Francis A.
Pratt, F. C.
Quint, A. D.
Rand, A. C.
Rankin, Thos. L.
Reist, H. G.
Rice, A. C.
Richards, C. B.
Richards, Francis H.
Richmond, Geo.
Richmond, K. C.
Riddell, John.
Robinson, A. W.
Rockwood, Geo. I.
Ross, E. L.
Rowland, A. E.
Sabin, A. H.
Schaeffer, Louis.
Schaum, Otto W.
Scheffler, F. A.
Schumann, Francis.
Schutte, Lewis.
Scott, Geo. H.
Serrell, J. A.
Shelmire, W. H.
Sinclair, Geo. N.
Smith, A. W.
Smith, Geo. H.
Smith, H. W.
Smith, Jesse M.
Smith, Oberlin.
Snow, S. M.
Souther, Henry.
Sparrow, E. P.
Spaulding, H. C.
Stetson, Geo. R.
Stiles, Norman C.
Stone, W. M.
Stratton, W. H.
Suplee, H. M.
Svenson, J. A. F.
Thomas, E. G.
Thompson, E. B.
Torrance, Kenneth.
Turner, John.
Upson, Lyman A.
Varney, W. W.
Waldo, Leonard.
Walworth, A. C.
Warner, Worcester R., *Pres.*
Warren, B. H.
Washburn, W. S.
Webb, J. B.
Wellman, C. H.
Wellman, S. T.
Whaley, W. B. Smith-
Whitehead, Geo E.
Whitney, Baxter D.
Whittier, Chas.
Wood, W. H.
Woodbury, C. J. H.
Woodward, Dan C.
Woolson, O. C.

Pursuant to the usual policy of reducing the routine business of the spring meeting to its lowest terms, the only items of business presented at this session were the report of the Council upon the votes cast by the members for and against the candidates seeking election. The report of the tellers was as follows :

REPORT OF TELLERS OF ELECTION.

The undersigned were appointed a Committee of the Council to act as tellers (under Rule 13), to scrutinize and count the ballots cast for and against the candidates proposed for membership in the American Society of Mechanical Engineers, and seeking election before the XXXVth meeting, Hartford, Conn., 1897.

They have met upon the designated day, in the office of the Society, and have proceeded to discharge their duty. They would certify, for formal insertion in the records of the Society, to the election of the persons whose names appear on the appended list to their respective grades.

There were 467 votes cast on the blue ballot, of which 29 were thrown out because of informalities (the members voting having neglected to indorse the sealed envelope).

JOHN C. KAFER,
GUS C. HENNING, } *Tellers of Election.*

MEMBERS.

Ahrens, Geo. Fred.
Bartlett, Henry.
Blanchard, Gilbert W.
Burgess, Chas. Monroe.
Craig, Jas., Jr.
Deming, Wm. Henry.
Evans, Wm. F.
Gleason, William.
Gulowsen, Gulow A.
Hill, Walter.
Hutchinson, Jos. A.
Johnston, J. Frank.
McKechnie, Robt. R.
Mayer, Fredk. J.
Morrin, Thos.
Morris, Wm. S.
Oldham, Jos. R.
Pope, Chas. Edward.
Schaumleffel, P. W.
Schueble, R. G.
Searing, Lewis.
Smith, Harry E.
Stoddard, Geo. H.
Tibbals, Geo. A.
Turner, Frank H.
Ward, Francis G.
Wilkinson, John L.
Wolcott, Henry A.

ASSOCIATES.

Damon, Geo. B.
Holmes, Walter G.
Jennings, Ed. L.
Kearney, Alex.
Lowry, Geo. A.
Lunkenheimer, Carl F.
Pilton, William.
Powell, Marcus.
Rapson, Trevor.
Riker, Andrew L.
Schuyler, Sage W.
Wilson, Chester P.

PROMOTION TO FULL MEMBERSHIP.

Burns, A. L.
Dinkel, Geo.
Hurd, Hobart J.
Pratt, Francis C.
Scott, Seaton M.
Simpson, Geo. R.
Veeder, Curtis H.

PROMOTION TO ASSOCIATE MEMBERSHIP.

Hale, Robt. Sever.

JUNIOR MEMBERS.

Brandon, Geo. R.
Brown, Louis Livingston.
Burgan, A. L.
Cole, Edward S.
Curtis, Greely S., Jr.
Dalman, John W., Jr.
Edwards, J. Irving.
Faig, John T.
Folson, Edson F.
Herron, Jas. H.
Hewlett, Edward M.
Hibbert, Walter W.
Hobert, S. G.
Hodges, Chas. Bowen.
Jacobs, Ward S.
Libby, Sam H.
McArthur, Geo. P.
McCaffery, Richard S.
Mora, Rafael de la.
Patterson, A. W., Jr.
Patterson, Peter C.
Prescott, Jas. A.
Robertson, C. H.
Rushmore, David B.
Wall, Geo. Floyd.
Watson, Henry D.
Williams, Edmund,
Wood, Benj. F.
Wyckoff, Arcalous W.

Other general business being then in order, Mr. Gus C. Henning presented, by request of the Council, the question of the advisability of seeking to coöperate with other organizations in securing a series of standards for the specification of materials which had themselves become standard, or concerning which engineers were substantially agreed. Mr. Henning spoke as follows:

"At the Zurich Conference on Unification of Testing Materials in 1895, a paper on 'The Desirability of Establishing Uniform Specifications and Methods of Inspection of Metals' was presented by Mr. E. Schroedter (Secretary of the Verein der Ingenieuren and Eisenhuettenleute), and the concluding recommendations were upon motion referred to the Council for consideration and action.

"In accordance therewith the Council, at a meeting held in Vienna last year, decided to take up the matter, and appointed a Committee to take action on the subject.

"In February, 1897, I received a letter * from the well-known and famous engineer of Le Creusot, Mr. J. Barba, advising me that he, as Vice-President of such Committee, asked me to name members of a Sub-Committee to be formed in the United States to take up the subject conjointly with the European Committees, and requested that I act on said Committee. When I referred the matter to our Ex-President, Capt. R. W. Hunt, he sent the following answer,* in view of which I herewith present the matter for discussion at this time.

"The object is to suggest standard specifications for quality and for inspection of all metals used in engineering, and in such a manner that any new developments in metallurgy or fabrication will not be hindered, and on the other hand to define materials in such a precise manner that proper materials may be obtained for each distinct purpose; such as boilers, engines, bridges, wire (telegraph, trolley, telephone, piano, cables, ropes, suspension bridges, various), railways, axles, tires, guns, bicycles, etc., etc."

The correspondence referred to above is appended:

CHICAGO, *April* 17, 1897.

Gus C. Henning, Esq., No. 5 *Beekman Street, New York.*

MY DEAR SIR: I beg to acknowledge yours of the 8th inst., and thank you for the compliment therein expressed.

---

* See letter appended hereto.

I fully appreciate the importance of the work outlined, and its weight makes it imperative that the subject should not be treated other than in a serious manner.

Personally, my many engagements in all sorts of directions render it unfit that I should try to serve on the proposed committee. While we have many American engineers who could render good service in the cause, it is hard to find those who are willing or can devote the necessary time to it. Hence it would seem as though it would be better if they could be selected from men who, while possessing knowledge gained from practical experience, are not disturbed by or dependent upon current business engagements. Of course we realize that there will come objections to "Professors," but at the same time I am not certain that they are not the class of people who can best serve in a cause of this kind, particularly if they have been in touch with manufacturing progress and interests.

Assuring you that it will give me pleasure to assist you in this matter, and if it should not be too late, that we will have an opportunity of discussing it at the coming Hartford meeting of the A. S. M. E.,

I remain, yours truly,
ROBERT W. HUNT.

(Translation of Mr. J. Barba's letter.)

PARIS, *February* 5, 1897.

MY DEAR SIR: You know that we are about to organize an International Commission, under the presidency of M. Ast, Managing Director of the Northern Railroad, Ferdinand, Vienna, Austria, to study the steps to be taken to establish international uniform rules for determining the quality and inspection of all kinds of iron and steel.

I have been honored by the nomination of Vice-President, and I have been asked with Mr. Ast to propose to the directing committee three or four persons from each of the principal nations, these persons to constitute said commission. I have already named the persons for France. I thought that you would kindly choose several able, willing persons in the United States who would assist us at the same time with yourself.

If you will kindly accept my proposition, I would be under obligations to you to name the three or four persons on whom we could count.

Receive, my dear sir, the assurance of my best sentiments.

(Signed) J. BARBA, 39 Rue Mozart.

After reading the report and the letters appended to it, Mr. Henning spoke further as follows:

Mr. Gus C. Henning.—These specifications should, of course, be elastic to a certain extent, both because there is constant progress in the manufacture of materials, and because if of a stereotyped form they would soon become antiquated and then interfere with the progress of improvement in materials or the development of new classes of materials; for if only old classes should be called for, the new classes introduced would come into general use only with great difficulty. The object is to define classes of material which are to answer certain purposes. If boiler material is called for, every manufacturer would understand that, under the standard specification, a certain kind of material is required. A certain other kind of material will be fit for other purposes, and so on. It will thereby lessen the kinds of material which have to be produced, and the mills will have less trouble in filling specifications ; because if the material does not fill one it will fill another, unless the material is of such a quality that it fills none, and is only fit for remelting. They would lessen the work of the manufacturer by simplifying the varieties and kinds, without introducing difficulties and the possibility of discussion as to what is and what is not proper material to be used ; and as the specifications are also to provide for methods of inspection, they will avoid a great deal of discussion which is now going on under almost every contract, because it will be so well known what the inspector's duties, rights, and privileges are, and what will be sufficient to fill the specifications, both in regard to material and the methods by which those qualities shall be determined. In view of this, the Council expressed the opinion that they concurred in Capt. R. W. Hunt's suggestion that the matter be laid before the Society in order that official action be taken if the Society thinks it advisable so to do. I trust I have fully explained the subject, but if any further information is required, I will, of course, gladly give it.

The President.—This question is of such importance that I hope the members present will be free to ask questions. I know many interesting ones were brought forth at the Council meeting, and I am sure that Mr. Henning can give any information which you may desire. Will anyone please raise any point, which Mr. Henning will gladly respond to. If there are no definite questions to be asked regarding details, it would seem to me appropriate that a motion be made referring it to the Council with power to act. If that is your pleasure, I will entertain such a motion.

A motion to refer was made and seconded.

Mr. Wm. Kent.—Mr. President, I think it might be advisable to have the whole matter printed and placed before the members so that they may have ample time to study it, and to have it then referred to the Council. By this procedure we would have ample time to consider the details of the matter before any action is taken, and at the meeting next fall we may then authorize the Council to act, with power to establish the Committee. I think it is premature to try to put the thing through now.

Mr. Henning.—I think the suggestions made are eminently proper. There is no occasion to hurry the matter through. It was presented, as just stated, for full discussion. No report can be made by the date of the meeting of the next convention in Stockholm, August 23–25; and if the matter be presented more fully to the Society as a whole it certainly will bring forth a great many opinions which it is desirable to have. It is very plain that there are a great many objections to writing standard specifications, because many have the idea that the usefulness of all such work is limited, as it is apt to make everything stereotyped; and nothing better can be done than to have the matter brought fully before the general membership and most completely discussed. If it is then submitted to the Council there will be ample time to have action taken at the annual meeting.

The President.—That seems to be an excellent suggestion, so I am prepared to hear a motion to that effect, that it be printed and circulated among our membership and brought up at the December meeting, there to be acted upon.

Such a motion is made and seconded.

The President.—The importance of this subject is brought to my mind by an incident that took place within the past two weeks, where I had occasion to see estimates on boiler specifications, not very definitely written, and to find that they varied one hundred per cent. It must be that the lowest one bid on the cheapest materials and the highest one on excellent materials. Such a standard as this would have brought those bids near together, and would have secured the selection of proper materials.

Mr. Kent.—The same kind of boilers?

The President.—They were understood to be the same kind of boilers. The specification was rather inexactly written.

The motion to print, etc., is carried.

No other or new business being presented, the professional papers assigned for discussion were taken up as follows:

Forrest R. Jones, "Diagrams for Relative Strength of Gear Teeth"; F. J. Cole, "Experiments in Boiler Bracing"; De Volson Wood, "Adiabatics"; Frederick A. Bedell, "New Form of Transmission Dynamometer"; R. S. Hale, "Fuel Gas Analysis in Boiler Tests"; R. C. Carpenter, "Hygrometric Properties of Coals."

Those who participated in the discussion on these papers were Messrs. John H. Barr, H. H. Suplee, Oberlin Smith, Wm. Kent, C. W. Hunt, Geo. I. Rockwood, Jas. Hartness, G. C. Henning, C. L. Newcomb, John Fritz, Geo. Richmond, Albert Kingsbury, C. J. H. Woodbury, J. H. Kinealy, R. C. Carpenter, and R. S. Hale.

In organizing the afternoon excursion for this day a new experiment was tried and with what has appeared to have been a certain degree of success. When an excursion party to visit a works has over three hundred persons in it the number to be taken care of becomes so large that the real intent of the visit is likely to be frustrated. Hence, with the concurrence of the shops in question, the visiting members were divided into two great groups, generally upon the line of the numerical succession in which they were registered. The members whose badge number indicated that they had registered before the number 150 was reached, made their excursion to the works of the Pope Manufacturing Company, and those whose numbers indicated a later registration were escorted to the Columbia Motor Carriage Works, to the Hartford Rubber Works, and to the Pope Tube Works. The first party, after completing the visit to the Pope Manufacturing Company, were escorted to the works of the Billings and Spencer Company, and the second group visited the Pratt and Whitney Company. At all places representatives of the office staff were at hand to serve as guides and escorts of their respective subdivisions through the works according to a prescribed programme, so that by this principle of subdivision it became possible for everyone to see every detail without the embarrassment which often follows from the congestion of large parties getting into small spaces. The arrangement by numbers was not made rigid or inflexible, so as to interfere with the preferences of friends, but was aimed merely to make the parties of manageable size.

In the evening, by invitation of the Faculty and Corporation of Trinity College, a reception was tendered to the visiting engineers in Alumni Hall. Acting President Dr. Thomas R. Pynchon received the guests in his official garb, while a committee of the students acted as ushers to attend to the conduct of the other features of the reception. After the attractive collation had been served in the hall the rugs and tables were moved to one side and dancing prevailed until a later hour. The representatives of the College, with their ladies, took active part in the entertainment of their guests.

THIRD SESSION. THURSDAY, MAY 27TH.

This session was called promptly to order at ten o'clock and was exclusively devoted to professional papers. The assignments of the morning were as follows:

Chas. H. Benjamin, "Electricity versus Shafting in the Machine Shop"; D. C. Jackson, "Electrical Power Equipment for General Factory Purposes"; Francis Schumann, "Volumnar Contraction of Cast-Iron"; A. L. Rice, "The Laws of Cylinder Condensation"; H. A. Hill, "Tests of Sulzer Engines"; H. M. Lane, "Method of Accounting to Determine Shop Cost and Selling Price."

The participants in debate upon these papers were Messrs. D. C. Woodward, C. H. Benjamin, L. S. Randolph, J. B. Blood, A. W. Robinson, H. H. Suplee, H. C. Spaulding, Jesse M. Smith, William Kent, John Fritz, A. A. Cary, Francis Schumann, A. F. Bardwell, W. B. Smith-Whaley, Oberlin Smith, George I. Rockwood, George R. Stetson, R. H. Thurston, J. B. Stanwood, D. S. Jacobus, F. A. Scheffler, C. W. Hunt, H. C. Francis, H. L. Gantt, G. C. Henning, and W. R. Warner.

The afternoon's excursion was made upon lines similar to those of the previous day. The party which had visited the Pope Manufacturing Company on Wednesday, visited the other establishments this afternoon, thus enabling every member to see thoroughly all points.

The fourth session, on Thursday evening, was devoted to a paper of somewhat popular character, illustrated with lantern slides from excellent photographs covering the History, Rise, and Development of the Bicycle. This paper was presented by Dr. Leonard Waldo.

It had been the intention of the Local Committee that after the close of this session an exhibition should be given of the capabilities of Hartford's self-propelling fire-engine; but by reason of the inclemency of the weather this exhibition was postponed until the following morning at an hour just before the convening of the professional session. This exhibition before an interested audience perhaps centred more general attention upon the presence of the engineers in Hartford than anything else which happened during their stay.

FIFTH SESSION. FRIDAY, MAY 28TH.

The papers assigned to the morning session, convened promptly at ten o'clock, were as follows:

W. S. Aldrich, "Rating Electrical Power Plants upon the Heat Unit Standard"; Gus C. Henning, "A Mirror Extensimeter"; John H. Barr, "Current Practice in Engine Proportions"; Thomas Gray, "A Continuous Steam Engine Indicator."

The discussion upon these papers was by Messrs. C. T. Porter, William Kent, F. A. Halsey, F. A. Scheffler, W. S. Aldrich, A. A. Cary, D. S. Jacobus, H. H. Suplee, John H. Barr, W. S. Aldrich, and Thomas Gray.

At the close of the papers assigned for this session the Topical Discussions were taken up, introduced by a short preface by the Secretary to the effect that it had been found desirable to introduce the subject to be discussed by a few paragraphs which should present one view of the question and then leave it for the meeting to continue it. Mr. E. J. Armstrong discussed the question as to a wise steam distribution at early cut-offs; Messrs. Mack, Carpenter, Gray, Barr, Suplee, and Kingsbury discussed certain tests upon the efficiency of the bicycle as a machine; and Messrs. Woodbury, Benjamin, and Sweet discussed the subject of basement floors for machine shops. There was no time for the presentation of discussions on the rotary steam engine, the crystallization of iron by vibration and shock, and a note upon an historic wind-mill gearing, which were postponed to the next meeting or else were to be treated as presented by title.

Two alternatives in the way of excursion were presented for this afternoon, but by reason of the perfect weather and the attractions offered by the excursion down the Connecticut River a comparatively small number only availed of the courteous invitation of the Colts Patent Fire Arms Company to visit their works and armory. The attractive excursion in which the greater number participated was that arranged by invitation of the Hon. John H. Hall in coöperation with Mr. Frederick DePeyster, to sail down the lovely Connecticut Valley from Hartford to Portland, with an opportunity at that place to visit the great brownstone quarries of the Brainerd, Shaler and Hall Quarry Co. The trip was made down the river in the beautiful light of a perfect May afternoon, with the elms and other trees of the landscape in their fresh green foliage. The party was accommodated upon a schooner with its tug-boat, and a small overflow party boarded a steam yacht. Arrived at Portland, the party was entertained at the office of the works, and thence transferred to a special train tendered by the courtesy of the New York, New Haven and Hartford Railroad, by which the party was conveyed to Berlin with a stop of a few minutes at East Berlin, where they were the guests of Mr. Chas. M. Jarvis, President of the Bridge Company, and were permitted a brief opportunity to see his works. At Berlin a stop was made at the new power station, generating current for the operation of the electric line between New Britain and Hartford, making use of the third-rail system for the transmission of electric energy. The train then ran into New Britain, where the party was broken up to board the open cars of the electric branch, and were conveyed at high speed back to the Union station at Hartford. A special high-geared motor on one of the cars enabled the trip to be made at the rate of nine and three-quarter miles in eleven minutes.

CLOSING SESSION. FRIDAY EVENING, MAY 28TH.

The President opened the final session at half-past eignt, by announcing the committee required under Article XI. of the rules, whose duty it shall be to nominate officers of the Society for the ensuing Society year, beginning at the annual meeting in December. The President announced as such committee:

Mr. C. H. Loring	New York City.
Mr. Jeremiah M. Allen	Hartford.
Mr. M. C. Bullock	Chicago.
Mr. Jesse M. Smith	Detroit.
Mr. John R. Freeman	Boston.

Professional papers were then taken up as follows:

Gus C. Henning, " A Pocket Recorder for Tests of Materials ";

Thomas Gray, "The Effect of Alternate Positive and Negative Stresses in Iron and Steel"; Thomas Gray, "The Yield Point in Iron and Steel"; D. S. Jacobus, "An Apparatus for Accurately Measuring Pressures of Ten Thousand Pounds per Square Inch and Over"; D. S. Jacobus, "Tests to Show the Influence of Moisture in Steam on the Economy of a Steam Turbine"; A. K. Mansfield, "The Best Load for Compound Steam Engine."

In their discussion, Messrs. Gray, Henning, Woolson, Benjamin, and Thurston took part.

General business being in order, the President called for the report of a committee which had been appointed to draw up for presentation at the meeting certain minutes or resolutions expressive ot the recognition of the Society for courtesies extended to them while in Hartford. Besides the general excursions which had been arranged for the membership in large bodies, there were other and particular courtesies which had been extended in the form of special invitations, special attentions to the ladies of the party, and in particular the general courtesy which had been extended to the Society in making its members, while in Hartford, the guests of the electric trolley lines of the city. This gave them free transportation in the large parties which went from hotels to the different establishments; but, in addition to this, the members, in their individual capacity for pleasure and other rides, were not allowed to pay their fare, but an abundance of books of coupon tickets were put at the service of all who would ask for them from the Secretary. The Committee on Resolutions therefore sought to cover all these various courtesies and attentions in the form of a series of papers which were presented to the Secretary for reading, as follows:

Resolved, That the American Society of Mechanical Engineers, which has convened in the city of Hartford for its thirty-fifth regular meeting, desires to put on record its sense of recognition for the courtesies which have been enjoyed at the hands of the manufacturers of Hartford. These gentlemen have opened their works to the free inspection of the visiting engineers, who fully appreciate all that it means to have the works thus laid open to outsiders.

The Society would especially extend its hearty thanks to Col. Albert A. Pope and his associates in the Pope Manufacturing Company; to the Hartford Rubber Works, to the Motor Carriage Works, and to the Pope Tube Company. The Society would particularly record its appreciation of the considerate way in which its visits were organized to these various works, for the division of the visiting party into small groups, and for the care which has been taken to see that every visitor should profit by the visit that he was permitted to make.

Resolved, That the American Society of Mechanical Engineers recognizes the historic preëminence, in the manufacturing world, of Hartford and of the Pratt & Whitney Company, and begs that the latter will accept the sincere thanks of the Society for the privilege accorded of a visit of inspection to their works, and the assurance of its interest in the machinery and processes which it was there given an opportunity to study.

Resolved, That to the firm of the Billings & Spencer Company the American Society of Mechanical Engineers accords the preëminence of being one of the first establishments to see the field in economical manufacture which would be opened by the successful introduction of the process of drop forging. The introduction of this process into the manufacture of guns and small arms, sewing machines, carriage-making, and latterly the bicycle manufacture, has been one of the elements which have given to American mechanics and engineers their world-wide fame. The Society would tender to the Billings & Spencer Company its sincere thanks for the opportunity to visit their works and see the process of forging in one of the places of its birth.

Resolved, That in the department of the manufacture of small arms, the City of Hartford has long stood preëminent. One great cause of this position and reputation has been the standing and success of the great armory which is known as the Colt's Patent Fire Arms Manufacturing Company's Shops. The Society desires to express to Mr. John H. Hall, Manager of this company, and his associates in charge of its various departments, its sincere thanks for the courtesy of an invitation to visit the armory during its stay in Hartford. The Society can only regret that the very fulness of its programme, which has been made to include so many points of professional interest, has made it impossible for all the members to avail of the opportunity as they would have desired.

Resolved, That the American Society of Mechanical Engineers, to which has been extended an opportunity to visit the great brownstone quarries of the Brainerd, Shaler & Hall Quarry Company of Portland, would seek by this resolution to record its sense of pleasure in this invitation and its indebtedness to the Hon. John H. Hall, who has made the arrangements for this visit. The Society would seek to include in this resolution and in its expression of thanks Mr. Frederick DePeyster, the General Manager of the quarry company, and would thank him in a special way for the assiduous care that he has taken in the matter of detail concerning the arrangements.

Resolved, That in these days of mechanical traction in our important cities the Company and its President who provide free transportation on its trolley system for the guest whom they desire to honor extend to such a guest a courtesy and attention which is only to be compared to that honor which in an older day and under other conditions has been called "the freedom of the city." The American Society of Mechanical Engineers wishes to express to Mr. E. S. Goodrich, President of the Hartford Street Railway System, and his associates in that business, its sincere thanks for the exceeding courtesy which the Society has enjoyed in being permitted to ride about the city during its stay as the guests of the Railway Company. Not satisfied with giving to the Society the surprising number of 4,000 complimentary tickets, the Company has supplemented that by additional provision so that by no possibility should any member fall short.

The question of the scope of the Mechanical Engineer in the field of transportation is one which the increasing development of our country is continually widening. Not the least interesting department of this work is that where the Mechanical Engineer unites with the Electrical Engineer in installations of great magnitude between points which are at some distance from each other. It is not yet definitely settled what are the limits within which the distribution of electrical energy is commercially to compete with the direct application of steam to traction, and for this reason the American Society of Mechanical Engineers has much appreciated the opportunity to inspect the great power house of the third-rail system at Berlin, and to enjoy a ride upon the electrically propelled cars of the New Britain branch of the N. Y., N. H. & H. R. R.

The Society would express its sincere thanks to Col. H. N. Heft, Chief Electrical Engineer of the N. Y., N. H. & H. R. R.; to Mr. John Henney, Superintendent of Motor Power; and to Mr. Davidson, Division Superintendent; and to Vice-President John H. Hall, together with their associates in the Transportation department of that great railway, for the courtesies that they have received at their hands. They appreciate in particular the transportation by special trains, which has enabled them to include the visit to the power plant in an afternoon already busily occupied, and for all the facilities which have been put at the convenience of the members for their excursion on this occasion.

Resolved, That the American Society of Mechanical Engineers desires to express its thanks to Mr. Chas. M. Jarvis, President of the Berlin Iron Bridge Company, for his courteous invitation to make a stop at the shops and for the attentions which were there enjoyed.

Resolved, That the American Society of Mechanical Engineers desires to express thanks to the Board of Fire Commissioners for the courtesy which was put within their reach by the opportunity given to see the action in service of Hartford's great self-propelling fire-engine on the morning of May 28th. They would express themselves as much pleased and interested to see the mechanical impressiveness of the self-propeller, the ease with which it was manœuvred, and its powerful appearance, which seems to justify its affectionate designation in the city which is proud to claim it for its own.

In the American Society of Mechanical Engineers the custom has not as yet prevailed of giving to the ladies in attendance an open voice in the conduct of its routine business. The members therefore must make themselves the mouthpiece for the expression to the ladies of Hartford of something of the indebtedness which the visiting ladies feel for those special and individual courtesies which have passed between the visiting ladies of the Society and their hostesses. Besides the individual attention in the matters of drives and the like, an especial emphasis should be given to the courtesy shown in so effective a way by the afternoon tea at the Allyn House, over which the Hartford hostesses presided, and which they succeeded in making so festal and enjoyable an affair. The members beg that the very clumsiness of the note of thanks may be taken as a foil to set off the delicacy of the attentions shown by the ladies.

The American Society of Mechanical Engineers desires to return to the Officers and Governors of the Hartford Club its sincere thanks for the considerate attention which has been shown to them in the form of the special cards whereby the visiting members were put up at the Club for the privileges of club membership during their stay. This attention, coming from sources not immediately connected with mechanical engineering, the Society takes as an evidence of kindly feeling toward mechanical engineering on the part of Hartford citizens which is particularly pleasant and for which a sincere expression of thanks is due.

The reception which was tendered to the Mechanical Engineers by the Faculty and Corporation of Trinity College will form one of the pleasantest memories of the week which the Society has spent in the city of Hartford. The close relation between education and engineering is often more fully appreciated by the engineers than from the other direction. This circumstance gives special signifiance to the action of the college authorities, and the Society would seek by this resolution to record its appreciation. They would beg the Faculty and Corporation of Trinity College to accept their thanks for their graceful courtesy, for the opportunity to meet the workers in a different field than their own, and for the strengthening of the bond between literary culture and the practical achievements of science and engineering.

Resolved, That the American Society of Mechanical Engineers begs to return to the Board of Trade of Hartford its sincere thanks for its cordial invitation to make use of its rooms in the Phoenix Insurance Company's building during their stay in the city.

The very full programme of regular excursions arranged for the Society during its stay in Hartford precluded the possibility of making visits in a body to all points of professional interest in so busy a manufacturing city.

The Society therefore requests that the firms and shops which have extended the courtesy of an invitation to individual members or small parties will accept its most sincere thanks for this attention.

The Society would include among those in this list the following: Hartford Woven Wire Mattress Company, Smith Bourne Company, The Hartford Cycle Company, Dwight Slate Machine Company, The Jewell Belting Company, Hartford Typewriter Company, Spencer Automatic Machine Screw Company, Trinity College, Asa S. Cook Company, Whitney Manufacturing Company, Thorne Machine Company, States Machine Company, Eddy Electric Company, Hartford Electric Light Company, Hartford City Gas Light Company, Hartford Street Railway Company, Perkins Electric Switch Company, National Machine Company, Pratt & Cady Company, The Hartford Machine Screw Company.

Resolved, That the American Society of Mechanical Engineers includes in its votes of thanks and recognition a minute expressive of the appreciative treatment which the Society has received from the Press of the City of Hartford, and asks that that body will give suitable publicity to the action which the Society has taken.

The American Society of Mechanical Engineers has again to make for itself an attempt to express on behalf of the ladies of its party something of the thanks which are due to Messrs. Cheney Bros. for the attentions shown on the occasion of the special excursion to their mills at South Manchester, for the delightful tea tendered them on this visit at the residence of Mr. Cheney and the opportunity for a charming personal acquaintance. for the visit to the mill, and for the most attractive souvenir which the ladies were permitted to take away with them.

The Society would seek to include in this resolution the Hartford, Rockville & Manchester Tramway Company, which, through its Secretary, Mr. Haynes, provided special cars for the trip and extended to the Society the courtesies of the road for this excursion.

Resolved, That the members of the American Society of Mechanical Engineers extend their hearty thanks to the Hartford Steam Boiler Inspection & Insurance Company, to Mr. Jeremiah M. Allen, its President, and to his associates for the courtesy of the invitation to visit their offices, with their technical museum and special appliances, and can only regret that it has not been possible for them to avail more generally of the privileges of this invitation.

Finally, When the American Society of Mechanical Engineers concludes, as it now does, one of its most successful conventions, it rises to adjourn with a sense of obligation to its Local Committee of Arrangements which is but feebly reflected in the somewhat formal mould of an official vote of thanks. The Society begs to ask that Mr. C. E. Billings, Chairman of the Local Committee, and Mr. F. C. Billings, its Secretary, will make themselves the channel through which their associates on the Local Committee may be assured of a heartfelt appreciation of their labor, and that they will accept the congratulations of the convention upon one of its most successful reunions.

At the close of the reading of this record it was moved that the Secretary be instructed to communicate by letter a copy of the resolution pertinent to each of the parties mentioned, and by an amendment it was directed that these resolutions be suitably engrossed for this purpose. The resolution to adopt the foregoing report as the action of the Society and the special resolutions concerning transmittal were unanimously adopted, and by a rising vote. The President in concluding the session suggested that the members might give personal point to their sense of recognition of the success of the Hartford meeting by the writing of individual and personal letters to their hosts after the return home; whereupon it was on motion resolved that the Society adjourn.

The next meeting, which will be the XVIIIth annual meeting, is to be expected in the city of New York in the last days of November.

DCCXXV.*

VOLUMNAR CONTRACTION OF CASTINGS IN COOLING.†

BY FRANCIS SCHUMANN, PHILADELPHIA.
(Member of the Society.)

INTRODUCTION.

It is proper that I should preface the reading of this paper with a few remarks. The object of the researches contained is to guide the engineer in the designing of the parts of a machine that he may avoid the occurrence of initial stresses and consequent deformation; it will likewise enable the foundryman to shift the responsibility for cracked and distorted castings from his shoulders to those of the designer, and be relieved of the necessity of performing feats of acrobatic twists in order to obtain castings perfect to the eye from forms and shapes grossly at variance with the laws of cooling.

From a commercial point of view, a conservative estimate of the daily losses of castings due to shrink cracks and deformation is at least five dollars per foundry, and there being about four thousand foundries in the United States, the aggregate loss is twenty thousand dollars per day. The loss of a large casting may reach hundreds of dollars.

A knowledge of the laws of cooling and the consequent contraction will show that wrong proportions of the shrouding of gear wheels, while supporting the teeth, may seriously weaken the rim of the wheel, by reason of the initial tensile stress from the greater rate of contraction in the rim than the shrouding. It

---

* Presented at the Hartford meeting (May, 1897) of the American Society of Mechanical Engineers, and forming part of Volume XVIII. of the *Transactions*.

† This paper contains addenda to the paper presented at the New York meeting (December, 1896) of the American Society of Mechanical Engineers, entitled "Contraction and Deformation of Iron Castings in Cooling from the Fluid to the Solid State," and is intended to open and continue discussion on that subject. The first paper appears as No. 718, *Transactions* A. S. M. E., vol. xviii., p. 394.

will exhibit the lowest ratio of costs to power delivered to the machinery of transmission is the best from the point of view of the purchaser.

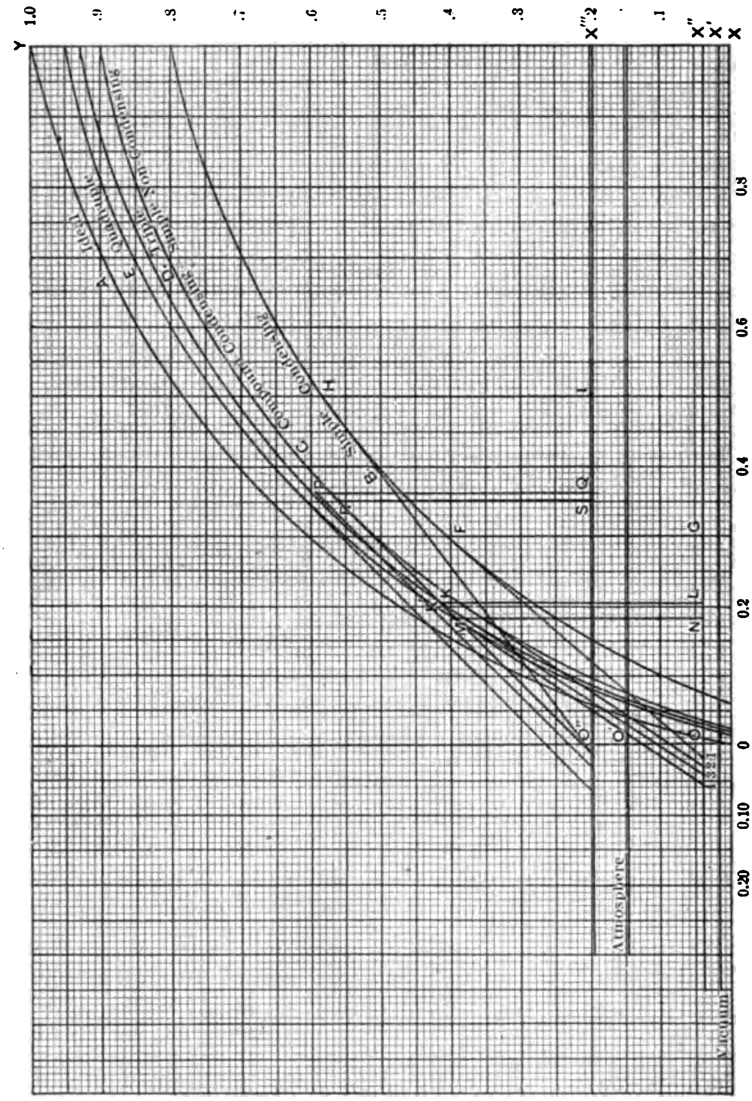

Finance of Multiple Cylinder Engines.

Fig. 207.

In the diagram (Fig. 207) let the curves *A*, *B*, *C*, *D*, *E*, respectively, represent the curves of efficiency found for each type of engine, as indicated by the attached legend, and let the total back pressures, as reckoned by Tate and by Rankine, be indicated by the ordinates of the lines $O''X,''$ $OX,'''$ and let the subscripts of O, as marked below and at the left of that letter, identify the respective measures of those costs which are variable with size of engine, in their order, from simple to triple expansion, inclusive; then the tangents drawn from the proper points, on either back-pressure line as thus identified, to the proper curve, will indicate just what proportion of the steam taken in at full stroke, or per cubic foot of cylinder, should be admitted to insure the most economical use of steam from the treasurer's standpoint.

Here, as in the preceding case, the ordinates are shorter than those of the ideal curve, which forms the upper limit, by the amount of cylinder condensation, clearance waste, and leakage, and of radiation and conduction observed or computed for the engines considered. These losses can now be estimated, usually, with a fairly close approximation to accuracy for the better classes of engine; many useful experimental data are also now available, and the latter are coming in in increasing quantity, fullness, and accuracy.

Mr. Brinsmade of Sibley College has discussed the effect of internal wastes on the proper ratio of expansion, thus:

In this derivation it was assumed that the expansion was according to the law of an equilateral hyperbola, or that PV was a constant quantity. It is also assumed that the loss by radiation, cylinder condensation, etc., is a constant quantity for all cut-offs between the same range of pressure. This latter assumption introduces a slight error into the work, as in the later cut-offs the extra surface exposed tends to increase the initial condensation. But as the larger portion of the initial condensing surface is made up of the area of the piston surface and cylinder head, this increase would by no means be proportional to the increase in the cut-off volume. If, however, a more exact determination is desired, this approximate calculation will serve as a trial value, to obtain a more exact idea of this cylinder loss. Then by solving again with this new value, almost all error can be eliminated.*

The accompanying Fig. 208 shows the diagram used in the deduction of this formula.

---

* See Thurston's *Manual of the Steam Engine*, vol. i., §§ 129, 130, especially p. 522.

By the law of the equilateral hyperbola,

$$PV = P_1V_1 = P_2V_2 = K \text{ on curve} \quad . \quad . \quad . \quad . \quad . \quad . \quad (a)$$

and $$PV = P_1V_1C = P_3V_2 = P_2V_3 = K_1 \text{ on curve} \quad . \quad . \quad (b).$$

Let area $ABDE = a'$.

$GCDE = a''$.

$CFEG = a'''$.

Then the percentage of the work utilized by the cycle *ABCFE*,

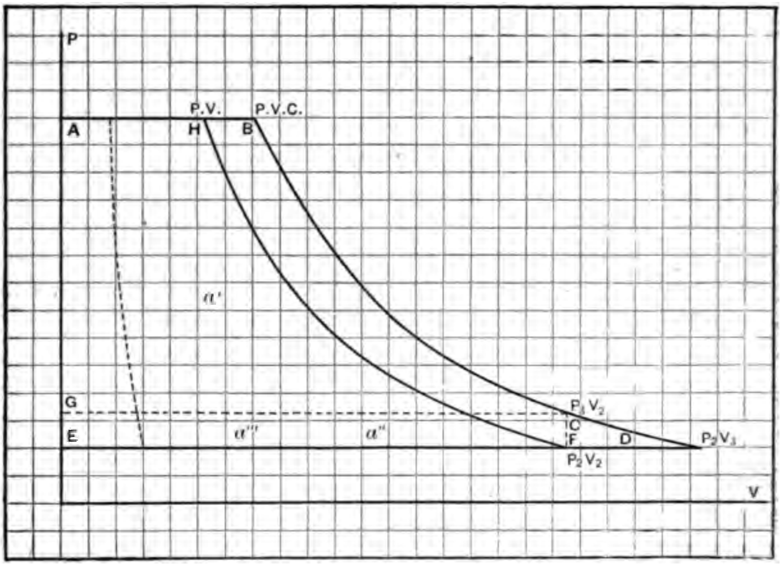

Mansfield

FIG. 208.

as compared to that of the free expansion diagram *ABDE*, assuming the loss by clearance volume, cylinder condensation, and external radiation equal to *R*, will equal

$$\frac{a' - a'' - a''' - R}{a'} = x.$$

$$a' = \int_{P_2}^{P_1} VdP = P_1V_1C\int_{P_1}^{P_2} dP/P = P_1V_1C \log P_1/P_2;$$

$$a'' = \int_{P_2}^{P_3} VdP = P_1VC\int_{P_2}^{P_3} dP/P = P_1V_1C \log P_3/P_2.$$

Now $P_3 = P_1 V_1 C / V_2$;

$$\therefore \; a'' = P_1 V_1 C \log P_1 V_1 C / P_2 V_2 = P_1 V_1 C \log C = KC \log C;$$

$$a''' = V_2 (P_3 - P_2) = V_2 (P_1 V_1 C / V_2 - P_2) = P_1 V_1 C - P_2 V_2$$
$$= K(C-1);$$

$$\frac{a' - (a'' - a''') - R}{a'} = \frac{KC \log P_1/P_2 - KC \log C + K(C-1) - R}{KC \log P_1/P_2}.$$

To simplify, make $K \log P_1/P_2 = F$;

$$x = \frac{CF - KC \log C + K(C-1) - R}{CF}$$
$$= \frac{C(F+K) - KC \log C - K - R}{CF};$$

$dx : dc$

$$= FC \frac{FC\{(F-K) - K - K \log C\} - F\{C(F-K) - KC \log C - K - R\}}{C^2 F^2}.$$

Solving for a maximum by making this quantity equal to zero,

$$KC = K + R;$$

$$C = (K + R)/K = (P_2 V_2 + R)/P_2 V_2;$$

where C is the ratio between the new cut-off volume and the cut-off volume when the steam expands to the back-pressure line, and equal, in the figure, to AB/AH.

Prof. R. C. Carpenter.—In connection with the short paper by Mr. Mansfield, I desire to call attention to the results of the tests of the experimental engine at Sibley College, which are given in the *Transactions* of the Society in vol. xvi., page 913, and also to a test given in vol. xiv., page 426. In both papers referred to, curves are shown of tests of compound engines running with different loads, and consequently with different numbers of expansions. One engine was a compound-condensing engine, with automatic cut-off, running 265 revolutions, 112 pounds of steam pressure, and 22 inches of vacuum; this shows the most economical results with 9¾ expansions. The other engine to which reference is made was a Corliss engine with 110 pounds of steam, 22 inches of vacuum; the results show highest economy with about 15 expansions when unjacketed and 20 expansions jacketed, and the variation of economy with change in number of expansions is very sensible, and indicates that the magnitude of the load has much to do with the economy.

Reference can also be made to topical discussion, 714-133, Mr. E. J. Armstrong.

The following diagrams show the results of tests made on the Sibley College experimental engine (Figs. 209, 210, 211):

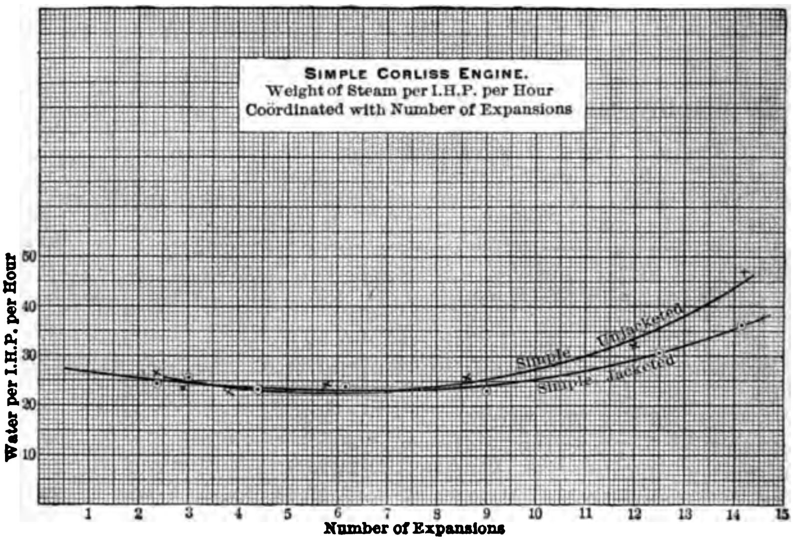

FIG. 209.

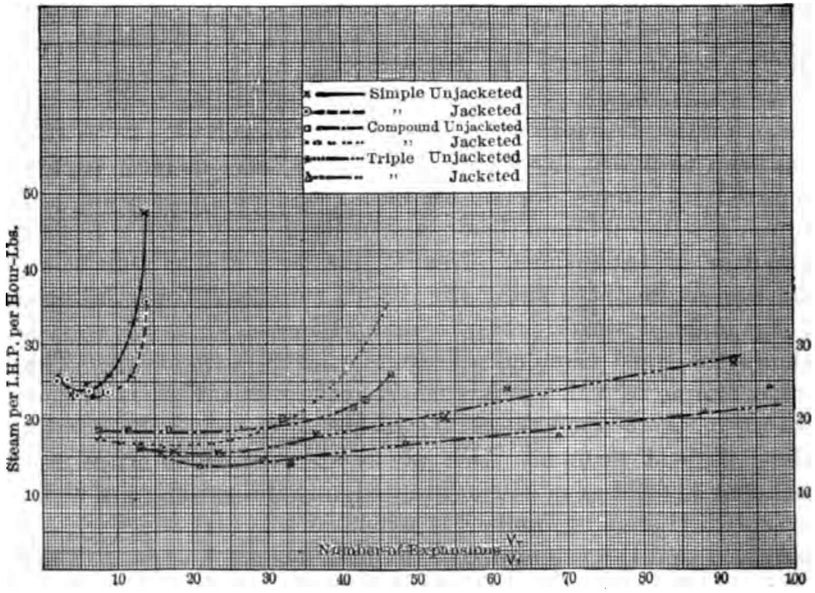

FIG. 210.

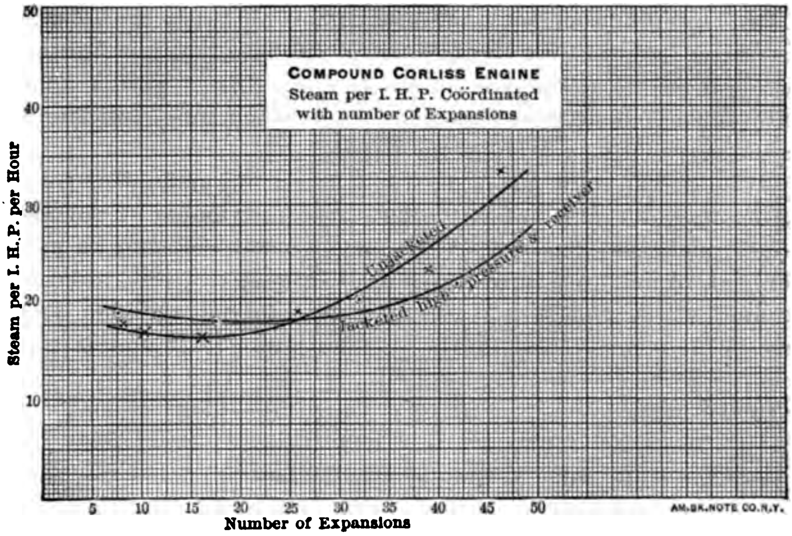

FIG. 211.

*Mr. A. K. Mansfield.**—I am glad to have called out this valuable discussion by Dr. Thurston. It contains important practical matter, especially that part relating to *ultimate money economy* as against ultimate steam or coal economy. This is not a new subject, but has needed to be applied to multiple-expansion work, and in fact finds there its most useful application.

It is rather startling to learn that 8½ expansions is to be preferred to that number (21) which gave such fine economy of steam in case of the Milwaukee pumping engine. Admitting the substantial correctness of Dr. Thurston's calculations, it may well be doubted whether triple or quadruple expansion can any longer be justified.

Designers of high-grade plants are now enabled, and hereafter should be required, to figure according to this new light.†

It should be noted that the Milwaukee engine runs at exceptionally low piston speed (204 feet). Engines of this size for most purposes are speeded three to four times as fast as this.

---

* Author's closure, under the Rules.

† The engineer who designed the plant of the Chicago City Railway Company installed simple non-condensing engines (see controversy in *Street Railway Journal* for May and June, 1897) on a similar theory to this, but clearly reduced the number of expansions of steam used far below the required limit.

Fig. 204 indicates 6.3 horse-power at a speed, let us say, of 400 revolutions per minute. When the speed is not maintained constant, it is necessary to determine the speed and to correct the reading accordingly.

It is thought that such a dynamometer, being simple and direct reading, will prove convenient not only in testing dynamos, turbines, engines, and revolving machinery of all sorts, but that it will find a useful place in power-houses and factories. Thus the engineer in charge of a station, cable-house, or factory can at a glance see the exact amount of power which is being used, and he can regulate his turbines or the supply of steam to suit the demands.

DISCUSSION.

Mr. Oberlin Smith.—It seems to me that the principle proposed by Professor Bedell is a beautiful thing for an appliance revolving at a high enough speed to enable the observer to see the light coming through the slots as a line or circle. On many engine shafts and line shafts turning at a low rate of speed, I should fancy that the circle of line would not be continuous, and that it would be difficult to observe intermittent dots of light.

Prof. F. R. Hutton.—For slow speeds of rotation the number of slots could be increased so as to give the effect of a continuous band of light.

Mr. C. J. H. Woodbury.—For the determination of the relative position of two bodies revolving in the same direction and on the same axis, there is another method than the use of a beam of light, in the manner illustrated in this paper. If an electric circuit is applied to the apparatus, with conductors terminating on the edge of the discs in such a manner that they will be in contact and complete the circuit when opposite to each other, this circuit will be broken whenever the relative position of these two discs is changed; and the amount of this angular motion can be measured with precision by moving one of the conductors until the circuit is closed again, using any of the usual methods such as a sliding collar containing a helical groove of large pitch, and moved along one shaft by a fork fitting in a groove. The amount of the angular motion or distortion between the two discs can readily be measured with great precision. The preferable method of ascertaining the closure of

DCCXXVIII.*

ADIABATICS.

BY DE VOLSON WOOD,† HOBOKEN, N. J.
(Member of the Society.)

WHILE the principles upon which the following solutions are founded are well known, the particular applications are new so far as known to the writer. The principles referred to are :

a. In any engine in which the law of pressures and volumes of the working fluid are represented on a diagram of energy by a closed path, the difference of the heats absorbed and emitted equals the area of the card all expressed in the same units.

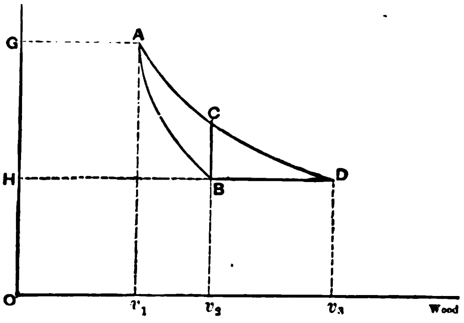

FIG. 212.

(The card of an actual engine rarely, if ever, represents this law exactly, on account of imperfections in the mechanism, hence the card for our use will be *ideal.*)

b. During adiabatic expansion no heat is absorbed or emitted by the working fluid.

Construct an ideal indicator card one side of which shall be an adiabatic and the other sides thermal lines of known properties.

A. To find the adiabatic of a perfect gas. In Fig. 212 let *AB*

---

[*] Presented at the Hartford meeting (May, 1897) of the American Society of Mechanical Engineers, and forming part of Volume XVIII. of the *Transactions.*

[†] This paper was revised by its author before his sudden death in June, 1897, but the discussion could not be sent to him. It therefore had to be published without the author's closure usual in the Society's practice.—*Secretary.*

Reference can also be made to topical discussion, 714-133, Mr. E. J. Armstrong.

The following diagrams show the results of tests made on the Sibley College experimental engine (Figs. 209, 210, 211):

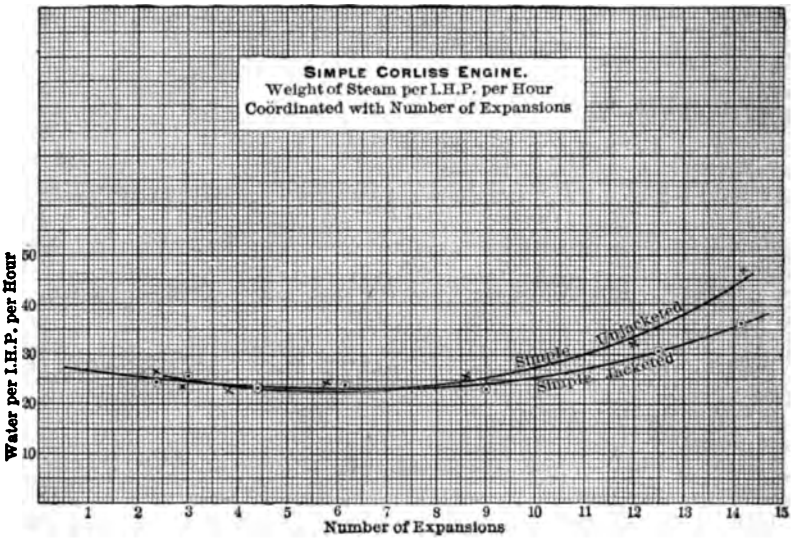

FIG. 209.

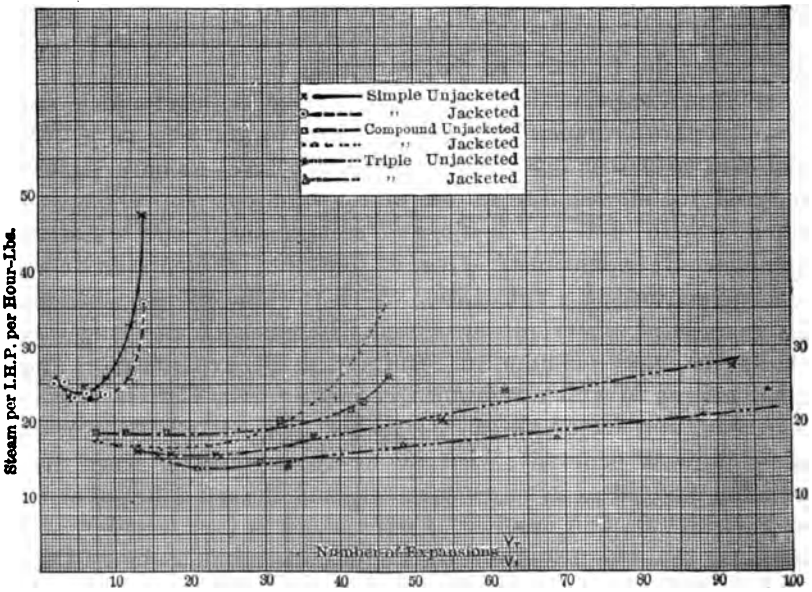

FIG. 210.

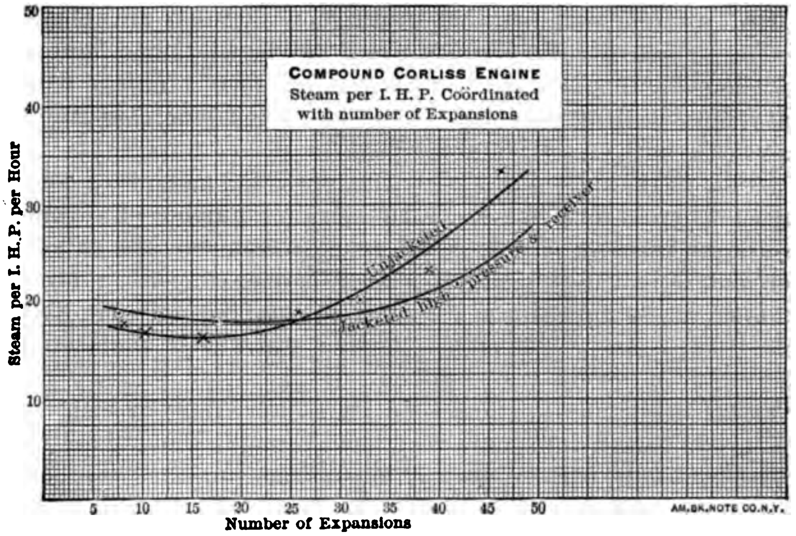

FIG. 211.

*Mr. A. K. Mansfield.**—I am glad to have called out this valuable discussion by Dr. Thurston. It contains important practical matter, especially that part relating to *ultimate money economy* as against ultimate steam or coal economy. This is not a new subject, but has needed to be applied to multiple-expansion work, and in fact finds there its most useful application.

It is rather startling to learn that 8½ expansions is to be preferred to that number (21) which gave such fine economy of steam in case of the Milwaukee pumping engine. Admitting the substantial correctness of Dr. Thurston's calculations, it may well be doubted whether triple or quadruple expansion can any longer be justified.

Designers of high-grade plants are now enabled, and hereafter should be required, to figure according to this new light.†

It should be noted that the Milwaukee engine runs at exceptionally low piston speed (204 feet). Engines of this size for most purposes are speeded three to four times as fast as this.

---

* Author's closure, under the Rules.

† The engineer who designed the plant of the Chicago City Railway Company installed simple non-condensing engines (see controversy in *Street Railway Journal* for May and June, 1897) on a similar theory to this, but clearly reduced the number of expansions of steam used far below the required limit.

Dr. Thurston suggests that a manufacturer "may be able to determine just what his engines give as the best terminal figures, and thus obtain a standard for his own practice." This is true, but it must be done from experiment, and, when done, constitutes an answer to the question of my paper.

Owing to the influence of clearance per cent., amount of compression, point of release, piston speed, or number of revolutions, quickness of cut-off, jacket or no jacket, reheater or not, per cent. of moisture in steam, size of engine, etc, etc., a large number of careful tests is essential to establish reliable data from which constants may be derived which will enable our theories to be successfully applied.

In the tests cited by Professor Carpenter some or many of the above-named influences may have brought about their interesting result, namely, that 9¾ expansions produced the best economy in our case; while in the other case, under similar conditions, fifteen expansions were required.

An analysis of the reasons would be of interest.

DCCXXVIII.*

ADIABATICS.

BY DE VOLSON WOOD,† HOBOKEN, N. J.

(Member of the Society.)

WHILE the principles upon which the following solutions are founded are well known, the particular applications are new so far as known to the writer. The principles referred to are :

a. In any engine in which the law of pressures and volumes of the working fluid are represented on a diagram of energy by a closed path, the difference of the heats absorbed and emitted equals the area of the card all expressed in the same units.

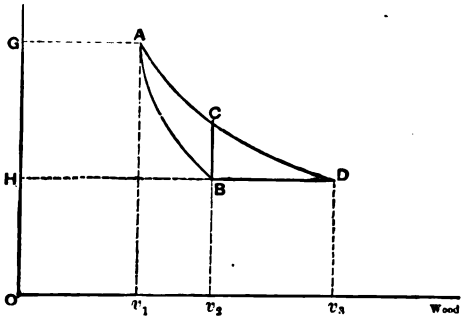

FIG. 212.

(The card of an actual engine rarely, if ever, represents this law exactly, on account of imperfections in the mechanism, hence the card for our use will be *ideal.*)

b. During adiabatic expansion no heat is absorbed or emitted by the working fluid.

Construct an ideal indicator card one side of which shall be an adiabatic and the other sides thermal lines of known properties.

A. To find the adiabatic of a perfect gas. In Fig. 212 let *AB*

---

* Presented at the Hartford meeting (May, 1897) of the American Society of Mechanical Engineers, and forming part of Volume XVIII. of the *Transactions.*

† This paper was revised by its author before his sudden death in June, 1897, but the discussion could not be sent to him. It therefore had to be published without the author's closure usual in the Society's practice.—*Secretary.*

be the adiabatic, AD an isothermal, BC a line of constant volume, v_1 the volume at A, v_2 at B or C, v_3 at D.

First work along AC, thence along CB, thence along the adiabatic BA. As is well known, the heat absorbed along the isothermal AC equals the work v_1ACv_2; that along CB will be C_v multiplied by the fall of temperature, where C_v denotes specific heat at constant volume in foot-pounds. No heat will be absorbed in working along the adiabatic BA. Let the temperature at B be $d\tau$ lower than that at A; then heat absorbed along AC — along CB — along $BA = ACB$; or,

$$v_1ACv_2 - C_v(-d\tau) + 0 = ACB;$$

$$\therefore v_1ACv_2 - ACB + C_vd\tau = 0;$$

$$\therefore v_1ABv = - C_vd\tau;$$

or, $$pdv = - C_vd\tau \quad . \; . \; . \; . \; . \; . \; . \; . \quad (a)$$

The left member cannot be integrated, so another equation must be established. Next, working from A to D, where D is on a horizontal through B, we have,

heat abs. along AD — along DB — along $BA = ADB$, or,

$$v_1ADv_3 - C_p(-d\tau) - 0 = ADB;$$

$$\therefore GADH - ADB + C_pd\tau = 0;$$

$$\therefore HGAB = - C_pd\tau;$$

$$\therefore v(-dp) = - C_pd\tau;$$

or, $$vdp = C_pd\tau \quad . \; . \; . \; . \; . \; . \; . \; . \; . \; . \quad (b)$$

Equations (a) and (b) give

$$\frac{vdp}{pdv} = \frac{C_p}{C_v} = \gamma = a\ constant.$$

The further solution proceeds as usual.

B. Adiabatics of saturated vapor. Let FN in Fig. 213 be the curve of saturation, then $AC = v_2$ will represent the volume of a pound of dry saturated vapor. Let AB be the xth part of a pound of the vapor, $(1 - x)\ AC = BC$ being liquid, and $EB\varphi$, be the adiabatic sought. Let state D be $d\tau$ higher in temperature than A, then

$$\text{pressure } AD = \left(\frac{dp}{d\tau}\right) d\tau.$$

Construct an indicator card one side of which is the adiabatic EB, the two sides DE and AB isothermals of a liquid and its vapor, and AD the constant volume of the liquid, then, as before, *heat absorbed along* AD + along DE + along EB − along BA = area $ADEB$.

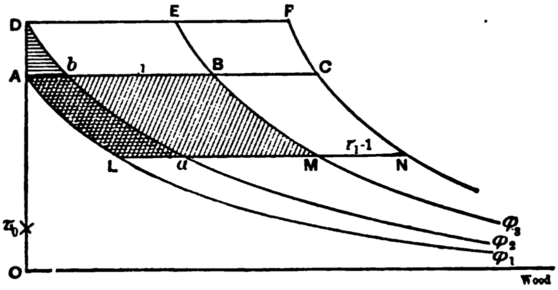

FIG. 213.

Draw adiabatics $A\varphi_1$, $D\varphi_2$, then along AD, heat absorbed = $\varphi_1AD\varphi_2 = Cd\tau$; along AB, heat absorbed = $\varphi_1AB\varphi_3 = xH_e$ = the heat of vaporization;

along BE, zero;

" DE, $\varphi_2DE\varphi_3 = xH_e + d\,(xH_e)$;

hence we have

$$Cd\tau + xH_e + d\,(xH_e) + 0 - xH_e = ADEB, \text{ or,}$$

$$Cd\tau + d\,(xH_e) = ADEB = xv.dp = xH_e\frac{d\tau}{\tau};$$

$$\therefore\ Cd\tau + d\,(xH_e) - xH_e\frac{d\tau}{\tau} = 0;$$

$$\therefore\ Cd\tau + \tau d\left(\frac{xH_e}{\tau}\right) = 0;$$

$$\therefore\ -C\frac{d\tau}{\tau} = d\left(\frac{xH_e}{\tau}\right) \quad \ldots\ldots \quad (c)$$

Integrating

$$-C\log_e\frac{\tau}{\tau_1} = \frac{xH_e}{\tau} - \frac{x_1H_{e_1}}{\tau_1} \quad \ldots\ldots \quad (d)$$

which is a well-known equation of the adiabatic of liquid and its vapor mixed.

Draw an isothermal, LN, one degree lower than that of AC, then will the horizontally shaded part $AbaL$ be $\frac{Cd\tau}{\tau}$ and the obliquely shaded part $ABML$ be $\frac{xH_e}{\tau}$, which terms appear in equation (c).

to be employed for highest "duty," and this corresponds within limits of errors of observation precisely with the actual adjustment of the engine at its trial, on which occasion the "world's record was broken for the time." It may be fairly presumed that the result is substantially correct. This gives a point of actual cut-off, 0.06 × 0.813 = 0.04878, as best when seeking maximum duty.

The computed and the actual, as found on trial, thus compare as follows:

Cut-off for maximum "duty" as computed	0.04878
Same as actually observed when breaking the world's record	0.04798

They are practically identical, the ratio of expansion being thus, 20.8.

Seeking maximum financial efficiency, we lay off, at the left of the axis of *Y*, a division on the upper back-pressure line measuring 0.025, taking the full length of the efficiency diagram as unity. Drawing a tangent to the real curve of efficiency from this point, the point of tangency is found at that point of which the ordinate measures 0.13. Here the condensation waste amounts to 0.095, and the amount of steam uncondensed is 0.905 of that introduced, giving the point of cut-off in the real case as 0.13 × 0.905 = 0.11765, corresponding to a real ratio of expansion less than nine.

The deduction immediately follows that, in this case, the proportions of engine giving the required work for the least total annual operating expenses would be smaller than those actually adopted and actually giving highest "duty," in the proportion indicated by this considerable difference between the actual and the computed ratios of expansion. It would seem that a compound engine would, in such a case, prove more economical, on the whole, than a triple expansion, and this deduction is confirmed by observing that the best ratio of expansion is one which would suit best a compound engine, and that the mean effective pressure in the low-pressure cylinder, also, is but a trifle higher than the mean resistance due back pressure and friction of engine. It is also confirmed by experiences of builders of pumping engines.

It would thus seem evident that, in cases such as that above studied, the demand, on the part of a city water-works department, for a steam engine that should give maximum duty, simply, is an error. What is required, as a matter of business, is that an engine shall be supplied that shall be proportioned in such manner as to give the required work at minimum total annual operating costs, including all expenses that find their way, on account of the steam plant, into the treasurer's books. It is now to be seen that considerable losses may be incurred by purchasing an engine of proportions giving maximum "duty," in the usual sense of that term. The saving of fuel thus insured may prove to be an expensive operation.

In the above instance, the fuel actually used, the cost of which is given, is comparatively expensive, anthracite having been employed in deference to the sentiment existing in favor of setting an example at the city steam plant of smokeless combustion; but a fuel could be obtained to do the same work at a much lower cost, making the best steam distribution for ultimate economy still further removed from that adopted in a triple-expansion engine, and making the compound engine still more desirable. The gain is also to be noted in the cost of the compound, as measured per cubic foot of its cylinder.

The total possible gain by the substitution of the plans of a simpler engine for those of the more complex thus involves :

(1) The reduced cost of supply, even with an engine, of similar type, proportioned for less expansion.

(2) The economy secured by the construction of a simpler type of engine.

(3) Possible economy with a cheaper fuel.

By a similar process the relative value of the various types of engine, as well as their best individual adjustments of steam distribution, may be ascertained, once the location and form of their actual " curves of efficiency " are determined. The method is to first identify the best cut-off and ratio of expansion for each, and then to compare their costs of power, one with another ; finally selecting that type and size of machine, as thus finally determined, which will pay the largest dividends upon the total capitalized costs of supplying the required amount of power. In illustration, in the accompanying figure, let the curves of efficiency be found and laid down, as indicated on the diagram ; the ratios of work done to costs of its performance as measured by the tangents of the angles at O' or O'', will be the measures of the relative values of the machines ; since that machine which, at its best adjustment and steam distribution, will exhibit the lowest ratio of costs to power delivered to the machinery of transmission is the best from the point of view of the purchaser.

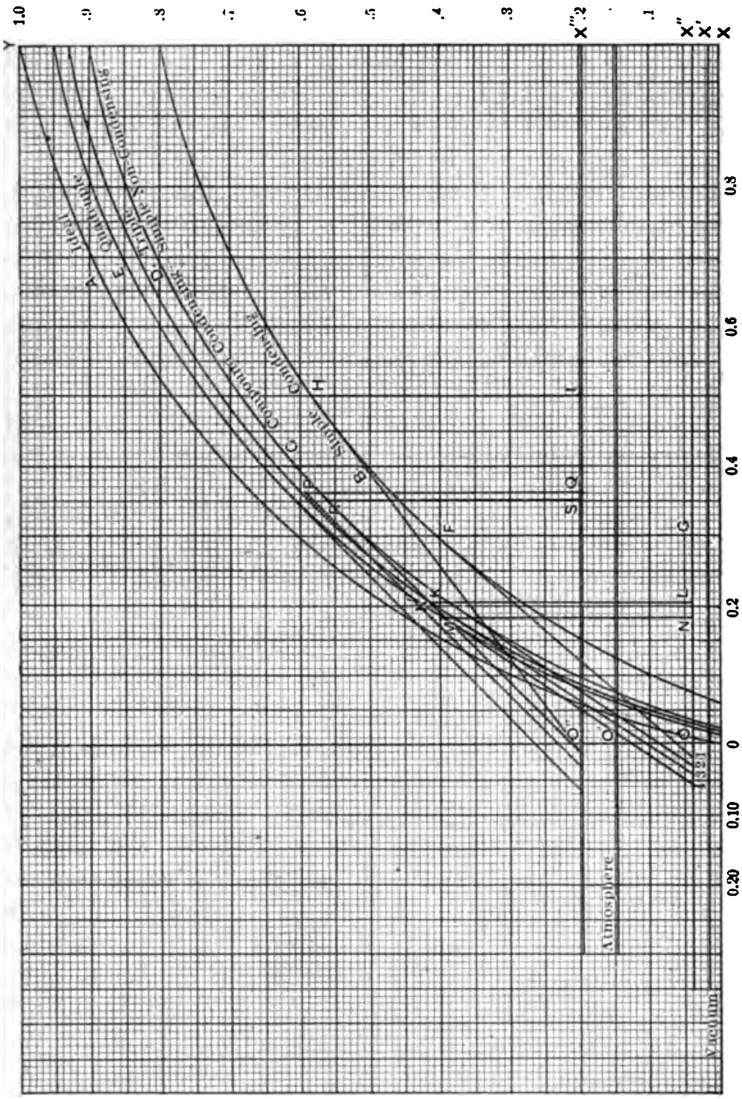

Finance of Multiple Cylinder Engines.

Fig. 207.

Mansfield

In the diagram (Fig. 207) let the curves *A*, *B*, *C*, *D*, *E*, respectively, represent the curves of efficiency found for each type of engine, as indicated by the attached legend, and let the total back pressures, as reckoned by Tate and by Rankine, be indicated by the ordinates of the lines $O''X,''$ $OX,'''$ and let the subscripts of O, as marked below and at the left of that letter, identify the respective measures of those costs which are variable with size of engine, in their order, from simple to triple expansion, inclusive; then the tangents drawn from the proper points, on either back-pressure line as thus identified, to the proper curve, will indicate just what proportion of the steam taken in at full stroke, or per cubic foot of cylinder, should be admitted to insure the most economical use of steam from the treasurer's standpoint.

Here, as in the preceding case, the ordinates are shorter than those of the ideal curve, which forms the upper limit, by the amount of cylinder condensation, clearance waste, and leakage, and of radiation and conduction observed or computed for the engines considered. These losses can now be estimated, usually, with a fairly close approximation to accuracy for the better classes of engine; many useful experimental data are also now available, and the latter are coming in in increasing quantity, fullness, and accuracy.

Mr. Brinsmade of Sibley College has discussed the effect of internal wastes on the proper ratio of expansion, thus:

In this derivation it was assumed that the expansion was according to the law of an equilateral hyperbola, or that PV was a constant quantity. It is also assumed that the loss by radiation, cylinder condensation, etc., is a constant quantity for all cut-offs between the same range of pressure. This latter assumption introduces a slight error into the work, as in the later cut-offs the extra surface exposed tends to increase the initial condensation. But as the larger portion of the initial condensing surface is made up of the area of the piston surface and cylinder head, this increase would by no means be proportional to the increase in the cut-off volume. If, however, a more exact determination is desired, this approximate calculation will serve as a trial value, to obtain a more exact idea of this cylinder loss. Then by solving again with this new value, almost all error can be eliminated.*

The accompanying Fig. 208 shows the diagram used in the deduction of this formula.

---

* See Thurston's *Manual of the Steam Engine*, vol. i., §§ 129, 130, especially p. 522.

By the law of the equilateral hyperbola,

$$PV = P_1V_1 = P_2V_2 = K \text{ on curve} \quad . \quad . \quad . \quad . \quad . \quad . \quad (a)$$

and
$$PV = P_1V_1C = P_3V_2 = P_2V_3 = K_1 \text{ on curve} \quad . \quad . \quad (b).$$

Let area $ABDE = a'$.

$GCDE = a''$.

$CFEG = a'''$.

Then the percentage of the work utilized by the cycle $ABCFE$,

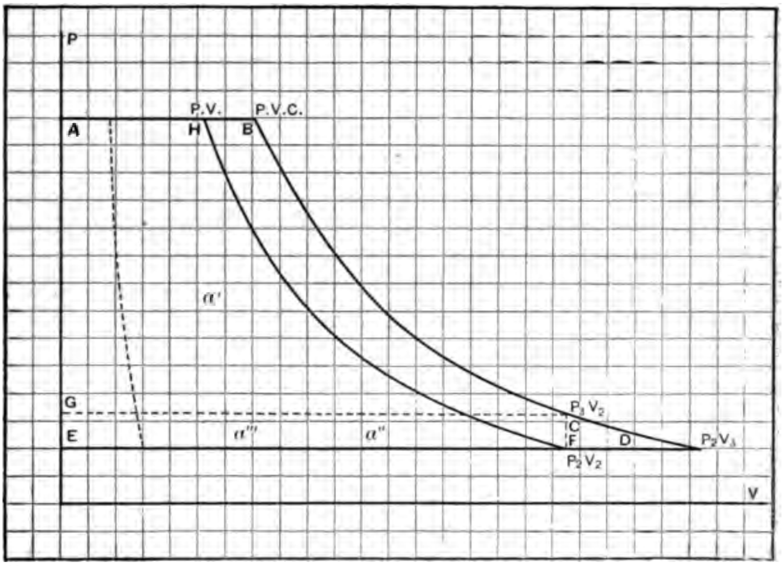

Mansfield

FIG. 208.

as compared to that of the free expansion diagram $ABDE$, assuming the loss by clearance volume, cylinder condensation, and external radiation equal to R, will equal

$$\frac{a' - a'' - a''' - R}{a'} = x.$$

$$a' = \int_{P_2}^{P_1} VdP = P_1V_1C\int_{P_1}^{P_1} dP/P = P_1V_1C \log P_1/P_2;$$

$$a'' = \int_{P_2}^{P_3} VdP = P_1VC\int_{P_2}^{P_3} dP/P = P_1V_1C \log P_3/P_2.$$

Now $P_3 = P_1 V_1 C / V_2$;

$$\therefore\ a'' = P_1 V_1 C \log P_1 V_1 C / P_2 V_2 = P_1 V_1 C \log C = KC \log C;$$

$$a''' = V_2 (P_3 - P_2) = V_2 (P_1 V_1 C / V_2 - P_2) = P_1 V_1 C - P_2 V_2$$
$$= K(C-1);$$

$$\frac{a' - (a'' - a'') - R}{a'} = \frac{KC \log P_1/P_2 - KC \log C + K(C-1) - R}{KC \log P_1/P_2}.$$

To simplify, make $K \log P_1/P_2 = F$;

$$x = \frac{CF - KC \log C + K(C-1) - R}{CF}$$
$$= \frac{C(F+K) - KC \log C - K - R}{CF};$$

$dx\ dc$
$$= FC \frac{FC\{(F-K) - K - K \log C\} - F\{C(F-K) - KC \log C - K - R\}}{C^2 F^2}.$$

Solving for a maximum by making this quantity equal to zero,

$$KC = K + R;$$

$$C = (K + R)/K = (P_2 V_2 + R)/P_2 V_2;$$

where C is the ratio between the new cut-off volume and the cut-off volume when the steam expands to the back-pressure line, and equal, in the figure, to AB/AH.

Prof. R. C. Carpenter.—In connection with the short paper by Mr. Mansfield, I desire to call attention to the results of the tests of the experimental engine at Sibley College, which are given in the *Transactions* of the Society in vol. xvi., page 913, and also to a test given in vol. xiv., page 426. In both papers referred to, curves are shown of tests of compound engines running with different loads, and consequently with different numbers of expansions. One engine was a compound-condensing engine, with automatic cut-off, running 265 revolutions, 112 pounds of steam pressure, and 22 inches of vacuum; this shows the most economical results with 9¾ expansions. The other engine to which reference is made was a Corliss engine with 110 pounds of steam, 22 inches of vacuum; the results show highest economy with about 15 expansions when unjacketed and 20 expansions jacketed, and the variation of economy with change in number of expansions is very sensible, and indicates that the magnitude of the load has much to do with the economy.

Reference can also be made to topical discussion, 714-133, Mr. E. J. Armstrong.

The following diagrams show the results of tests made on the Sibley College experimental engine (Figs. 209, 210, 211):

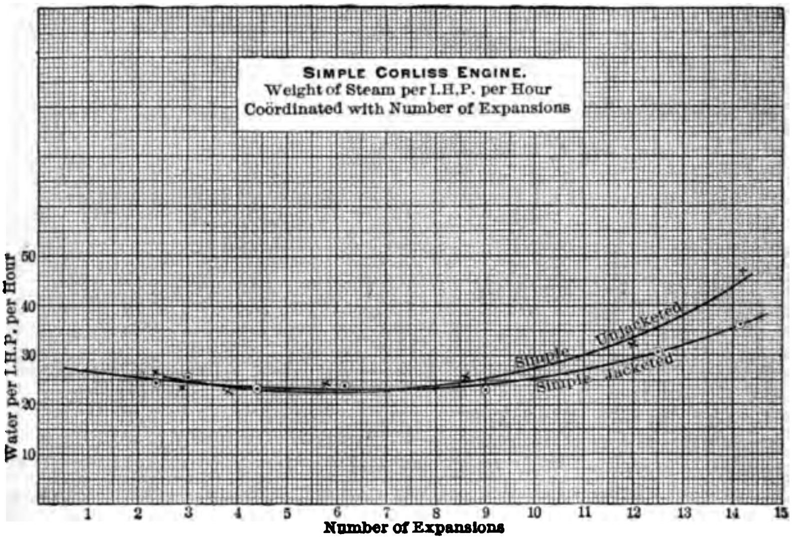

FIG. 209.

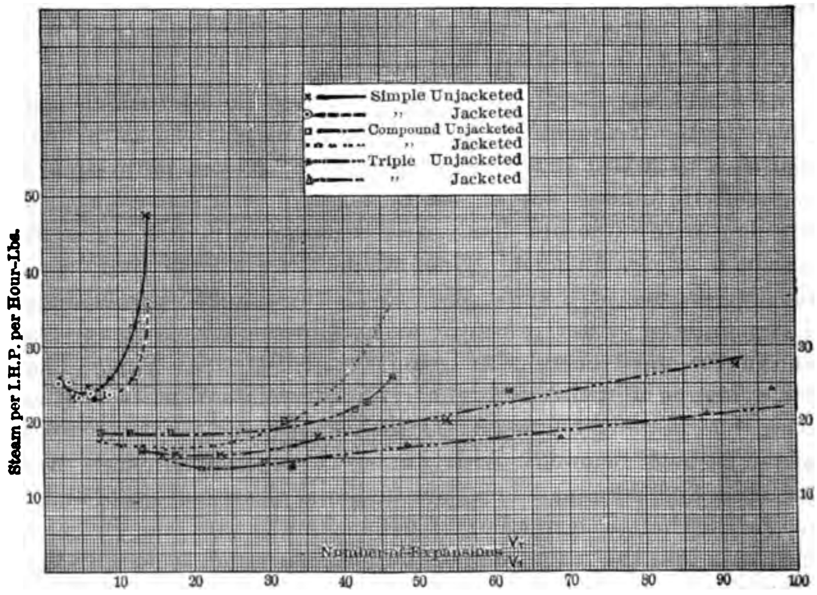

FIG. 210.

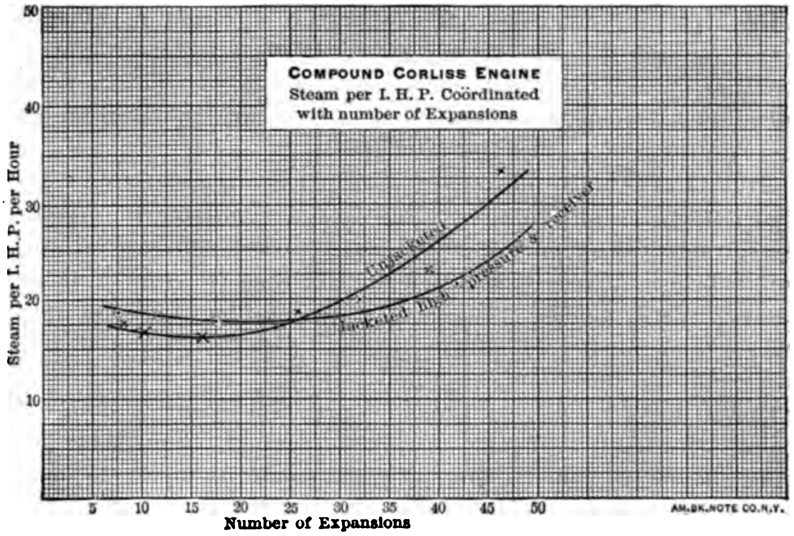

FIG. 211.

*Mr. A. K. Mansfield.**—I am glad to have called out this valuable discussion by Dr. Thurston. It contains important practical matter, especially that part relating to *ultimate money economy* as against ultimate steam or coal economy. This is not a new subject, but has needed to be applied to multiple-expansion work, and in fact finds there its most useful application.

It is rather startling to learn that 8½ expansions is to be preferred to that number (21) which gave such fine economy of steam in case of the Milwaukee pumping engine. Admitting the substantial correctness of Dr. Thurston's calculations, it may well be doubted whether triple or quadruple expansion can any longer be justified.

Designers of high-grade plants are now enabled, and hereafter should be required, to figure according to this new light.†

It should be noted that the Milwaukee engine runs at exceptionally low piston speed (204 feet). Engines of this size for most purposes are speeded three to four times as fast as this.

---

* Author's closure, under the Rules.

† The engineer who designed the plant of the Chicago City Railway Company installed simple non-condensing engines (see controversy in *Street Railway Journal* for May and June, 1897) on a similar theory to this, but clearly reduced the number of expansions of steam used far below the required limit.

Dr. Thurston suggests that a manufacturer "may be able to determine just what his engines give as the best terminal figures, and thus obtain a standard for his own practice." This is true, but it must be done from experiment, and, when done, constitutes an answer to the question of my paper.

Owing to the influence of clearance per cent., amount of compression, point of release, piston speed, or number of revolutions, quickness of cut-off, jacket or no jacket, reheater or not, per cent. of moisture in steam, size of engine, etc, etc., a large number of careful tests is essential to establish reliable data from which constants may be derived which will enable our theories to be successfully applied.

In the tests cited by Professor Carpenter some or many of the above-named influences may have brought about their interesting result, namely, that $9\frac{3}{4}$ expansions produced the best economy in our case; while in the other case, under similar conditions, fifteen expansions were required.

An analysis of the reasons would be of interest.

DCCXXVIII.*

ADIABATICS.

BY DE VOLSON WOOD,† HOBOKEN, N. J.
(Member of the Society.)

WHILE the principles upon which the following solutions are founded are well known, the particular applications are new so far as known to the writer. The principles referred to are :

a. In any engine in which the law of pressures and volumes of the working fluid are represented on a diagram of energy by a closed path, the difference of the heats absorbed and emitted equals the area of the card all expressed in the same units.

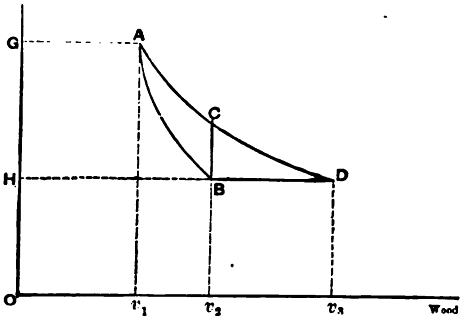

FIG. 212.

(The card of an actual engine rarely, if ever, represents this law exactly, on account of imperfections in the mechanism, hence the card for our use will be *ideal.*)

b. During adiabatic expansion no heat is absorbed or emitted by the working fluid.

Construct an ideal indicator card one side of which shall be an adiabatic and the other sides thermal lines of known properties.

A. To find the adiabatic of a perfect gas. In Fig. 212 let AB

---

* Presented at the Hartford meeting (May, 1897) of the American Society of Mechanical Engineers, and forming part of Volume XVIII. of the *Transactions.*

† This paper was revised by its author before his sudden death in June, 1897, but the discussion could not be sent to him. It therefore had to be published without the author's closure usual in the Society's practice.—*Secretary.*

be the adiabatic, AD an isothermal, BC a line of constant volume, v_1 the volume at A, v_2 at B or C, v_3 at D.

First work along AC, thence along CB, thence along the adiabatic BA. As is well known, the heat absorbed along the isothermal AC equals the work v_1ACv_2; that along CB will be C_v multiplied by the fall of temperature, where C_v denotes specific heat at constant volume in foot-pounds. No heat will be absorbed in working along the adiabatic BA. Let the temperature at B be $d\tau$ lower than that at A; then heat absorbed along AC − along CB − along $BA = ACB$; or,

$$v_1ACv_2 - C_v(-d\tau) + 0 = ACB;$$

$$\therefore v_1ACv_2 - ACB + C_v d\tau = 0;$$

$$\therefore v_1ABv = -C_v d\tau;$$

or,

$$pdv = -C_v d\tau \quad . \; . \; . \; . \; . \; . \; . \; . \quad (a)$$

The left member cannot be integrated, so another equation must be established. Next, working from A to D, where D is on a horizontal through B, we have,

heat abs. along AD − along DB − along $BA = ADB$, or,

$$v_1ADv_3 - C_p(-d\tau) - 0 = ADB;$$

$$\therefore GADH - ADB + C_p d\tau = 0;$$

$$\therefore HGAB = -C_p d\tau;$$

$$\therefore v(-dp) = -C_p d\tau;$$

or,

$$vdp = C_p d\tau \quad . \; . \; . \; . \; . \; . \; . \; . \; . \; . \quad (b)$$

Equations (a) and (b) give

$$\frac{vdp}{pdv} = \frac{C_p}{C_v} = \gamma = a \text{ constant}.$$

The further solution proceeds as usual.

B. Adiabatics of saturated vapor. Let FN in Fig. 213 be the curve of saturation, then $AC = v_2$ will represent the volume of a pound of dry saturated vapor. Let AB be the xth part of a pound of the vapor, $(1 - x)\ AC = BC$ being liquid, and $EB\varphi$, be the adiabatic sought. Let state D be $d\tau$ higher in temperature than A, then

$$\text{pressure } AD = \left(\frac{dp}{d\tau}\right) d\tau.$$

Construct an indicator card one side of which is the adiabatic EB, the two sides DE and AB isothermals of a liquid and its vapor, and AD the constant volume of the liquid, then, as before, *heat absorbed along* AD + along DE + along EB − along BA = area $ADEB$.

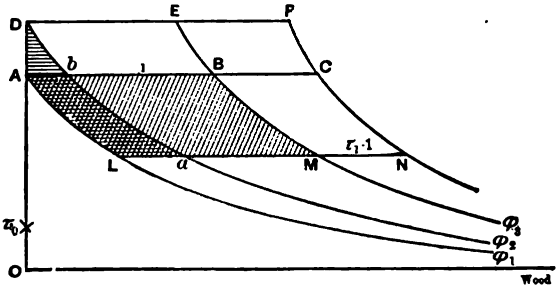

FIG. 213.

Draw adiabatics $A\varphi_1$, $D\varphi_2$, then along AD, heat absorbed $= \varphi_1 AD\varphi_2 = Cd\tau$; along AB, heat absorbed $= \varphi_1 AB\varphi_3 = xH_e =$ the heat of vaporization;

along BE, zero;

" DE, $\varphi_2 DE\varphi_3 = xH_e + d\,(xH_e)$;

hence we have

$$Cd\tau + xH_e + d\,(xH_e) + 0 - xH_e = ADEB, \text{ or,}$$

$$Cd\tau + d\,(xH_e) = ADEB = xv.dp = xH_e\frac{d\tau}{\tau};$$

$$\therefore\ Cd\tau + d\,(xH_e) - xH_e\frac{d\tau}{\tau} = 0;$$

$$\therefore\ Cd\tau + \tau d\left(\frac{xH_e}{\tau}\right) = 0;$$

$$\therefore\ -C\frac{d\tau}{\tau} = d\left(\frac{xH_e}{\tau}\right) \quad \ldots\ldots \quad (c)$$

Integrating

$$-C\log_e\frac{\tau}{\tau_1} = \frac{xH_e}{\tau} - \frac{x_1H_{e_1}}{\tau_1} \quad \ldots\ldots \quad (d)$$

which is a well-known equation of the adiabatic of liquid and its vapor mixed.

Draw an isothermal, LN, one degree lower than that of AC, then will the horizontally shaded part $AbaL$ be $\frac{Cd\tau}{\tau}$ and the obliquely shaded part $ABML$ be $\frac{xH_e}{\tau}$, which terms appear in equation (c).

DISCUSSION.

Mr. George Richmond.—I would like to point out that these results, which are interesting and important, can also be obtained without the use of the calculus. The first two statements in the paper describe the well-known indicator diagram. Its area represents, as we know, the missing heat expressed in units of work. Now, the question is whether this is not more conveniently represented by a heat diagram in which the missing heat appears in heat units of equivalent value to the work area of the indicator diagram. We cannot devise a mechanism to record the heat changes, but we can very readily construct such a diagram from the physical properties of the substance under consideration.

Take, for example, water at, say, 212 degrees. On the application of heat the temperature rises; if the ordinate at 1 (Fig. 214) represents the absolute initial temperature and travels forward in such a manner as to sweep out an area proportional to the heat applied, its extremity will trace a curved line, 1, 2, representing the rise in temperature. If at the temperature 2 vaporization commences, the temperature will remain stationary and the area representing the latent heat will be swept out by an ordinate of constant length, the extremity of which traces the horizontal line 2, 3. Since the rectangle represents the latent heat, and one side of it the absolute temperature, the other side must represent the quantity $\frac{L}{T}$.

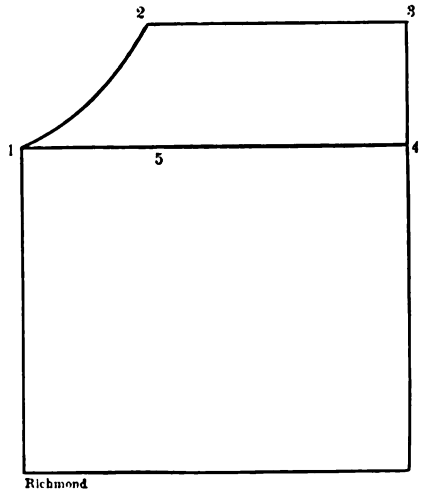

FIG. 214.

From 3 to 4 the temperature drops without addition or abstraction of heat by the process of adiabatic expansion. Finally the untransformable heat is rejected into the condenser represented by the area swept out by the ordinate in passing *backwards* from 4 to 1. The area 1, 2, 3, 4, represents in heat units the missing heat and is, of course, an area exactly equivalent to the work area of the ideal indicator diagram.

Returning to the subject under discussion, it will be noticed that adiabatics are represented on this diagram by straight lines parallel to one of the axes, and their equations are, therefore, of the simplest possible form, being merely a statement of the criterion of parallelism.

We may even, if unfamiliar with coördinate geometry, fall back on the geometrical criterion that parallel lines are everywhere equidistant. We can pass from the point 1 to the adiabatic 3, 4, by vaporizing, say, x_1 of a pound of water at temperature 1; then the line 1, 4 $= x_1 \frac{L_1}{T_1}$. Or, we may first raise the temperature of the pound of water to 2, and then, by vaporizing, say, x_2 per cent., pass to 3; then the line 2, 3 $= x_2 \frac{L_2}{T_2}$. The distance travelled forward is in each case the same; or,

$$\frac{x_1 L_1}{T} = 1, 5 + \frac{x_2 L_2}{T_2}.$$

The only quantity unknown is the distance 1 to 5 travelled while the temperature is rising from 1 to 2. The heat imparted is proportional to the rise in temperature, and the curve traced from 1 to 2 is a logarithmic curve, hence 1 to 5 $= \log e \frac{T_1}{T_2}$. Substituting this value, we have

$$\frac{x_1 L_2}{T_1} = \log e \frac{T_1}{T_1} + \frac{x_2 L_2}{T_2},$$

which is the equation to the adiabatic (*d*) of Professor Wood. The values of $\frac{L}{T}$ and log *e* T are now to be found in all modern tables, and all the usual problems of practical thermodynamics can be solved with the greatest ease by construction.

The equation to the adiabatic for perfect gases can be written down at sight in the same manner. The passage from one adiabatic to another may take place on any path or combination of paths; it is

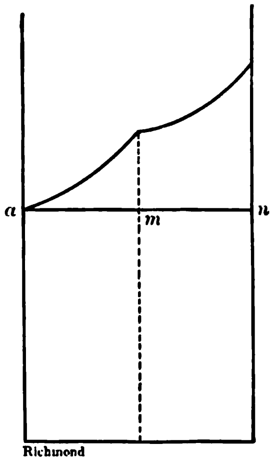

FIG. 295.

only necessary to consider the variables we wish to introduce. If we wish to express the equation to the adiabatic in terms of the pressure and volume, for instance, we may suppose the change to be effected first by adding heat at constant volume and then at constant pressure.

$$am + nm = an = \text{constant (see Fig. 215)},$$

which is the equation to the adiabatic. It remains only to express *am* and *mn* in terms of *P* and *V*.

Referring to the relation

$$PV = RT,$$

we see that in travelling from *a* to *m*, the pressure being constant, the change in-temperature is proportional to the change in volume; so that

$$am = C_v \log e \frac{P_2}{P_1}.$$

From *m* to *n* the pressure being constant, the change in temperature is proportional to the change in column; or,

$$mn = C_p \log e \frac{V_2}{V_1};$$

hence *am* equation becomes

$$C_v \log e \frac{P_2}{P_1} + C_p \log e \frac{V_2}{V_1} = \text{constant},$$

which can be readily put into any of the usual forms.

While the importance of mathematical knowledge is not to be underrated, the prevailing opinion that problems of thermodynamics cannot be intelligently handled without the use of higher mathematics is not founded on fact. There is absolutely no need of introducing the calculus into any thermodynamic question that an engineer meets with in practice. A few hours, intelligent study will place the matter as much at his command as are the rules of arithmetic.

Mr. Wm. Kent.—I would like to have Mr. Richmond, if he will, state more plainly what are the abscissas in these diagrams. Do they represent entropy or work?

Mr. Richmond.—The abscissas represent entropy. I avoided the use of the word because, while the thing itself is most simple, the word seems to be associated with a certain difficulty, if not mystery. The other coördinate is, of course, temperature.

Mr. Kent.—I understand Mr. Richmond's explanation of entropy to be that it is simply a mathematical expression for the quotient obtained by dividing the work by the absolute temperature. I hope he will write out in complete form a little treatise about this subject, and put it into our *Transactions*, with the title "Thermodynamics Without the Calculus."

Mr. George I. Rockwood.—I don't wish to be considered frivolous; but I must confess I need more light on adiabatics than is contained in text-books. Mr. Richmond will confer a favor on the world of steam engineers at large if he will tell just why we should be so profoundly interested as we seem to be in adiabatics.

It is admitted on all sides that no gas ever expanded adiabatically, or ever will—steam least of all—and the deductions arising from the analysis of adiabatic curves are wholly inapplicable to any known case of a gas or a heat engine.

Has the study of adiabatic curves ever given to the world a new heat engine or an important modification of existing heat engines? I think I am right in saying that all such improvements have originated in the minds of those who could not claim to know much about these curves.

Now, I wish to know what heat engine is going to be devised in the future, to which this mathematical investigation which has been introduced by very eminent writers is tending. Perhaps the prophetic eye of the mathematician may discern what use it subserves.

If it can ever be expected to lighten up the real facts concerning the nature of heat, then its further prosecution may be justifiable.

The President.—I think Mr. Richmond has a good invitation to write a paper on this subject, to be presented at the next meeting. I have often noticed that when a question is up for consideration which involves the calculus, most of us look very wise and dissent from the statement. (Laughter.)

Mr. Kent.—I would like to ask if this system is the same as McFarland Gray's?

Mr. Richmond.—Yes; it is what is known as the temperature-entropy diagram. It is very largely used in Europe, and I am unable to understand why we are so slow in adopting it here.

Mr. Kent.—I will tell you why. Because you have not yet written your treatise. I heard McFarland Gray read his paper in 1889, and I don't think there were five men in the room that understood it. You were one of them, probably.

Mr. Richmond.—Mr. Gray used this method in connection with his paper, the subject of which was rather abstruse. He has on this and many other occasions endeavored to popularize it, the best results of which are probably to be found in the well-known reports of the late Mr. Williams.

The contention is that, although the results of thermodynamics were originally obtained as mathematical deductions, we are at present entitled to the intelligent use of them on the easiest terms procurable.

Mr. Rockwood.—Mr. President, may I supplement my question by asking Mr. Richmond to dwell particularly upon the nature of heat and upon the nature of entropy, because therein he will do a great service for steam engineers? Mr. Kent was not so simple in his question as he seemed, as shown by his subsequent answer, that Mr. Richmond considered entropy a mathematical fiction. Now, a mathematical equation does not convey anything to a mathematical or unmathematical mind, except as something to be dealt with, and every steam engineer will certainly then want to know what the relation of heat to temperature is.

Mr. Kent.—I hope Mr. Richmond will not say anything in his paper about the nature of heat. I think it was Maxwell or Stewart said: " What heat is, we don't know." We don't know, and we are not going to know. There is no such thing as entropy.

Mr. Rockwood.—Let Mr. Richmond write his paper.

Mr. Richmond.—If you represent a known quantity as the product of two factors one of which is also known, the conception of the other factor is not very difficult, under whatever name it may be known.

Mr. Rockwood.—A conception has no arms, legs, body, or heart. What we want to know is all the features of this conception.

Prof. Albert Kingsbury.—The speaker has said that we can get a complete grasp of this in an hour or an hour and a half. My experience with the calculus has been that it is much better to spend time in learning it than trying to do work without it. I think that if the thermodynamic principles can be learned in an hour and a half, the calculus can all be learned in about twenty-five minutes; and it is useful for many things besides thermodynamics.

DCCXXIX.*

TESTS TO SHOW THE INFLUENCE OF MOISTURE IN STEAM ON THE ECONOMY OF A STEAM TURBINE.

BY D. S. JACOBUS, HOBOKEN, N. J.

(Member of the Society.)

THERE has been an impression in the minds of some engineers that the presence of a small amount of moisture in the steam used by a steam turbine might tend to improve the efficiency by increasing the density of the jets of steam that impinge against the buckets of the wheel. This would not follow from the theory of the steam turbine if the friction of the turbine and of the steam in the passages, and other losses, are not included, but as these form a large factor in the economy, and must be taken account of in any theoretical discussion of the effect of moisture, the problem becomes complicated, and it is difficult to predict, from theory, what the exact effect will be.

Tests were therefore undertaken, in which the amount of moisture in the steam was accurately determined, by starting with dry steam and condensing a portion of the same in the steam main leading to the turbine. The heat required to condense the steam, so as to form the moisture, was determined, and from this heat the weight of moisture was calculated. The power developed by the turbine was measured by means of a Prony brake. The total amount of water consumed by the turbine was measured by condensing the exhaust in a surface condenser, and from this total amount the moisture in the steam on entering the turbine was deducted to obtain the weight of dry steam used by the turbine.

The conclusions arrived at are:

First.—The average dry steam consumption, or the total water consumption, less the weight of entrained water in the steam entering the turbine, was about the same for either dry or wet steam.

---

* Presented at the Hartford meeting (May, 1897) of the American Society of Mechanical Engineers, and forming part of Volume XVIII. of the *Transactions*.

Second.—This may only hold for wheels of a similar type running under similar conditions.

The pressure of steam in the tests was about 95 pounds per square inch above the atmosphere. The turbine wheel was 8⅝ inches in diameter, and ran at about 10,200 revolutions per minute.

At 14½ brake horse-power the dry-steam consumption was about 68½ pounds per hour per horse-power, with either dry steam or steam containing moisture.

The weight of dry steam per hour per brake horse-power, in comparative tests, is given in Table I.

TABLE I.

STEAM CONSUMPTION PER HOUR PER HORSE-POWER FOR A STEAM TURBINE WITH DRY AND WET STEAM.

TESTS WITH DRY STEAM.			TESTS WITH WET STEAM.			
Number of Test.	Horse-power by Prony Brake.	Steam per Hour per Horse-power.	Number of Test.	Percentage of Moisture in Steam.	Horse-power by Prony Brake.	Steam per Hour per Horse-power=Total Water Consumption Less Weight of Entrained Water in Steam Entering the Turbine.
1	2	3	4	5	6	7
9	15.17	67.5	7	3.7	15.08	68.7
12	15.25	67.6	11	4.7	15.13	67.1
14	15.17	71.9	13	4.6	15.16	69.8
16	13.53	67.5	15	18.5	13.64	66.4
19	13.47	68.3	17	16.8	13.41	70.7
			18	18.3	13.43	69.5
Average	14.52	68.6			14.31	68.7

There were sixteen jets of steam impinging on the turbine wheel. These were in groups of four each, and the governor was arranged so that it cut off the steam from one or more of the four groups of jets. Each jet had a width of one-eighth of an inch. measured in a vertical direction to the plane of rotation of the turbine wheel. The smallest cross-section of each jet was about 0.009 square inch, and the largest 0.015 square inch. The jets issued at an angle of 67 degrees to the radius of the wheel.

The turbine wheel was of steel. It was 8⅝ inches in diameter, and was geared so that the driving shaft ran at one-ninth of the speed of the wheel. The Prony brake was placed on the driving shaft. There were forty-six buckets in the turbine wheel. The width of the passages in the wheel, measured at right angles to the plane of rotation, was three-sixteenths of an inch. The area of the cross-section of the passages in the wheel was about 0.032 square inch. The angles made by lines tangent to the two sides of a bucket in the wheel with a radius passing through the bucket averaged 52 degrees on the inside of the wheel and 69 degrees on the outside.

The devices employed for condensing a portion of the steam in the pipe leading to the steam turbine are shown in Figs. 216 and 217. The device shown in Fig. 216 was employed for the tests when there was a small percentage of moisture, and that shown in Fig. 217 for the tests when the percentage of moisture was made greater.

The steam from the boiler first passed through a separator (not shown in the figures), and from the separator entered the pipe marked *A* in Figs. 216 and 217. In Fig. 216 cold water entered the pipe *C*, and flowed through the pipe *EF*, which was enclosed in the steam space in the vertical pipe *M*. The half-inch pipe *EF* passed through two stuffing-boxes *G* and *H*. The water flowing through the pipe *EF* was heated, and condensed a portion of the steam. The amount that the water was heated was measured by means of two thermometers, *I* and *J*, placed in mercury wells. The weight of water circulated through the pipe *EF* was determined by collecting it in a large tank placed on a pair of platform scales.

The arrangement of piping shown in Fig. 216 was used in tests Nos. 7, 11, and 13. The pipe *M* and the pipe *EF* were made longer in tests Nos. 11 and 13 than in No. 7, so as to increase the amount of steam condensed.

Tests Nos. 15, 17, and 18 were made with the arrangement shown in Fig. 217. The vertical pipe *M* shown in Fig. 216 was dispensed with, and a horizontal length of two-inch pipe was used for condensing a portion of the steam, in place of the vertical length of half-inch pipe. The horizontal two-inch pipe was placed inside of the four inch pipe *FE*, and is shown by dotted lines in Fig. 217. The inlet water passed through the half-inch pipe *N*, and the exit water passed out through the half-inch pipe *M*. The pipes *N* and *M* passed through the stuffing-boxes *H* and *G*. The temperature of the water was measured by means of the thermometers *J* and *K*.

The total amount of steam entering the turbine, together with the entrained water in the same, was measured by condensing the exhaust of the turbine in a surface condenser.

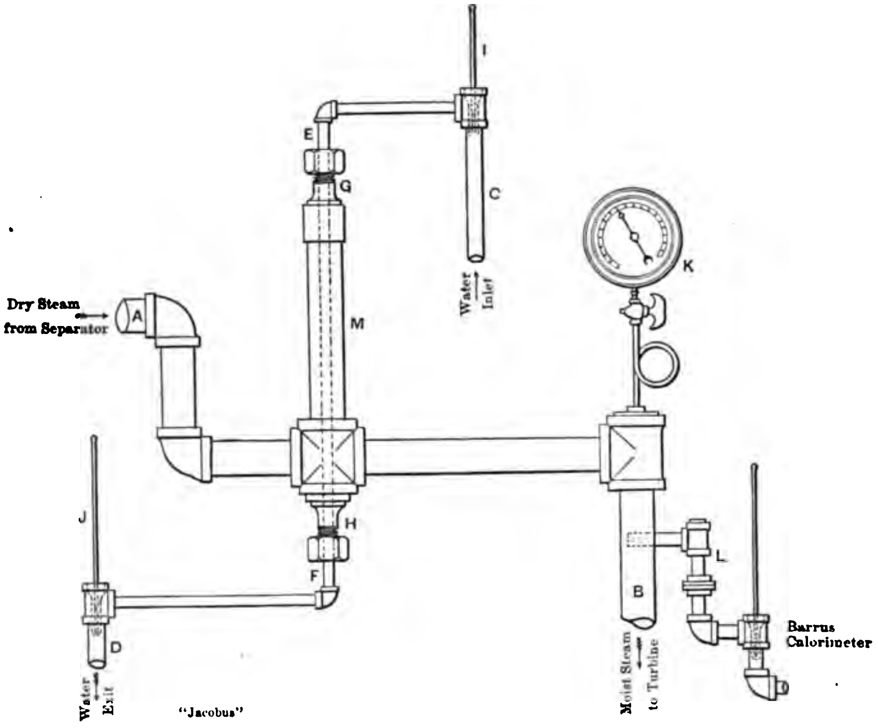

FIG. 216.

In the tests with dry steam no water was circulated through the cooling pipes, and the steam was found to be dry by means of the Barrus calorimeter, marked *L* in Figs. 216 and 217, or to contain less than one-fifth of one per cent. of moisture, which is considered as dry steam in the present investigation.

The tests with wet and dry steam were made alternately, so as to eliminate errors due to any possible change in the turbine.

The piping shown in Figs. 216 and 217 was coated with hair-felt. The exhaust pipe leading from the turbine was of a large diameter, and the back-pressure of the exhaust steam was practically that of the atmosphere.

The Prony brake consisted of two hemp ropes, passed around a pulley about twelve inches in diameter, in which were fastened to flanges so as to form a hollow rim. The ropes made a full turn about the pulley, and were fastened to a wooden frame, which rested on a pair of platform scales in the same way as is represented in Fig. 234, which accompanied my discussion of a paper by Professor Goss on "New Forms of Friction Brakes,"* presented to the Society about two years ago. It was found necessary to play water on the outside of the brake-wheel, to prevent the ropes from burning, as well as to keep water on the interior of the rim. At first great difficulty was experienced in making the Prony brake work uniformly under the severe conditions, but all difficulty was eliminated when it was found that a cake of ordinary soap, held against the face of the wheel when running, would cause the brake to work smoothly.

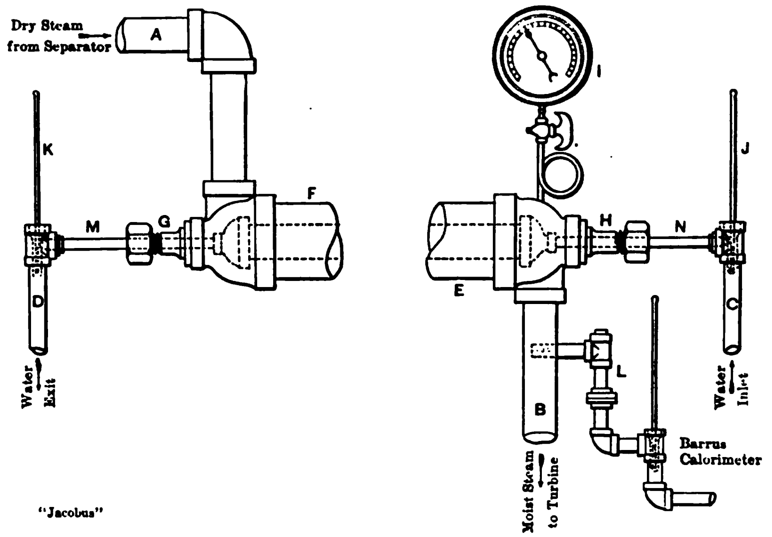

FIG. 217.

The results of the tests in detail are given in Table II. Table III. gives data and calculations of the amount of moisture contained in the steam entering the turbine.

---

* *Transactions* A. S. M. E., vol. xvi., page 820.

TABLE II.

TESTS OF A STEAM TURBINE WITH DRY AND WITH WET STEAM.

Number of Test.	Date of Test.	Percentage of Moisture in Steam.	Load on Prony Brake, in Pounds.	Steam Pressure in Pounds per Square Inch above Atmosphere.	Average Time for Prony Brake-wheel to make 1,200 Revolutions, in Seconds.	Revolutions of Prony Brake-wheel per Minute.	Horse-power by Prony Brake.	Dry Steam Consumption = Total Water Consumption Less Weight of Entrained Water, in Pounds.		Duration of Test in Minutes.
								Per Hour.	Per Hour per Horse-power.	
1	2	3	4	5	6	7	8	9	10	11
1	1896. Oct. 13	0	82.0	90	62.07	1,160.0	9.66	680.2	70.4	60
2	" "	0	124.0	92	64.12	1,122.9	14.15	973.5	68.8	60
3	" 14	0	41.5	91	60.15	1,197.0	5.05	404.2	80.0	60
4	" "	0	170.0	112	64.83	1,110.6	19.18	1,257.0	65.5	10
5	" 15	0	118.6	125	62.75	1,147.4	13.83	892.0	64.5	60
6	" "	0	147.8	130	63.83	1,128.0	16.94	1,157.0	68.3	60
7	" 16	3.7	132.0	94.5	64.00	1,125.0	15.08	1,036.1	68.7	60
8	" "	9.3	43.0	92	60.00	1,200.0	5.24	410.7	78.4	40
9	" "	0	132.0	94.3	63.66	1,131.0	15.17	1,023.9	67.5	35
10	" "	0	43.0	95.0	59.90	1,202.0	5.25	382.2	72.8	25
11	Nov. 16	4.7	132.0	92.7	63.82	1,128.2	15.13	1,014.8	67.1	60
12	" "	0	132.0	91.6	63.32	1,137.1	15.25	1,031.0	67.6	60
13	" "	4.6	132.0	95.0	63.70	1,130.3	15.16	1,058.3	69.8	45
14	" "	0	132.0	93.0	63.63	1,131.5	15.17	1,091.1	71.9	20
15	1897. Jan. 15	18.5	118.5	93.2	63.54	1,133.1	13.64	905.1	66.4	60
16	" "	0	116.5	93.6	62.98	1,143.2	13.53	913.5	67.5	60
17	" "	16.8	116.5	94.9	63.53	1,133.3	13.41	948.6	70.7	25
18	" "	18.3	116.5	94.0	63.45	1,134.7	13.43	934.0	69.5	50
19	" "	0	116.5	92.9	63.25	1,138.3	13.47	920.2	68.3	40

Column 7 = 1,200 × 60 ÷ Column 6.
Column 8 = Column 4 × Column 7 × 0.0001016.
Column 10 = Column 9 ÷ Column 8.
Revolutions of turbine wheel per minute = Column 6 × 9, because the gear reduces in the ratio of 9 to 1.

TABLE III.

DATA AND CALCULATION OF PERCENTAGE OF MOISTURE IN THE TESTS WITH WET STEAM.

Number of Test.	Steam Pressure in Pounds per Square Inch above Atmosphere.	Weight of Water circulated through Cooler, in Pounds per Hour.	Temperature of Cooling Water, in Degrees Fahr.		Weight of Steam condensed by Cooler, in Pounds per Hour, or Entrained Water in Steam.	Steam and Entrained Water in Same from Condenser in Pounds per Hour.	Dry Steam per Hour in Pounds, or Total Water Consumption Less Weight of Entrained Water.	Percentage of Moisture in Steam.
			Initial.	Final.				
1	2	3	4	5	6	7	8	9
7	94.5	455.0	57.2	133.3	39.4	1,075.5	1,036.1	3.7
8	92.0	940.5	56.2	95.8	42.3	453.0	410.7	9.3
11	92.7	607.0	50.1	122.8	50.2	1,065.0	1,014.8	4.7
13	95.0	730.7	49.9	111.7	51.4	1,109.7	1,058.3	4.6
15	93.2	1,699.0	35.7	142.2	205.8	1,110.9	905.1	18.5
17	94.9	1,476.0	36.0	150.3	192.0	1,140.6	948.6	16.8
18	94.0	1,787.2	36.0	139.2	209.9	1,143.9	934.0	18.3

Column 6 = Column 3 (Column 5 − Column 4) ÷ latent heat of one pound of steam at pressure given in Column 2.

Column 8 = Column 7 − Column 6 = Column 9, Table II. Column 9 = Column 6 × 100 ÷ Column 7.

DCCXXX.*

THE EFFECT OF ALTERNATE POSITIVE AND NEGATIVE STRESSES ON IRON AND STEEL.

BY THOMAS GRAY, TERRE HAUTE, IND.
(Member of the Society.)

THE experiments of Wöhler and others have demonstrated the importance of distinguishing between the strength of a structure against a steady application of load in one direction and the strength against repeated applications of load in opposite directions. It occurred to me a year or two ago that some interesting information might be obtained from a series of autographic diagrams taken from successive tests of a piece of iron or steel when the load was applied alternately in opposite directions.

Some preliminary experiments were made on test pieces of cast iron, wrought iron, and mild steel, the results of which form the subject of this note. In these experiments the specimens were subjected to direct tension and compression alternately, and one of the principal reasons why the investigation has not advanced beyond the preliminary stage is the inconvenience of the ordinary testing machine for such work. The specimen has to be removed from the machine and replaced in a different position between each pair of tests. This requires some time and a readjustment of the autographic apparatus, and hence the passage from positive to negative stress is not so continuous as seems desirable. Some alterations on the testing machine are now being made, and I hope at a future meeting of the Society to be able to give a more valuable contribution on this subject.

The results which these preliminary experiments have given will probably be most easily stated by reference to the sample diagrams, Figs. 218-221. The diagrams were obtained by means of the autographic apparatus described at the San Francisco

---

* Presented at the Hartford meeting (May, 1897) of the American Society of Mechanical Engineers, and forming part of Volume XVIII. of the *Transactions.*

meeting of the Society and published in the *Transactions*, vol. xiii., p. 633. Figs. 218-220 refer to a specimen of cast iron the total length of which, for the tests given in Fig. 218, was 27 inches. One inch at each end was 2.5 inches in diameter, and the remainder was turned down to a uniform diameter of 2 inches. Tension was applied by pulling on the shoulders of the thick ends, and compression was applied by pressure directly on the flat ends. The diagram shows the relation of the change of length to the applied force for the middle 15 inches of the specimen. The scales are arbitrary. Distances in inches, measured from the origin in the direction *AA*, when multiplied by 7,485 give the actual force applied to the specimen. Forces measured to the left of the origin represent tensions, and measured to the right pressures. Change of length is indicated by distances from the line *AA* measured parallel to *BB*. The inches marked on the diagram divided by 189 give the actual change of length on the 15 inches under observation. The order of the experiment may be followed on the diagram. Beginning at the origin, elongation takes place to *a*. The load being gradually removed, the specimen returns practically to its original length. The next experiment gives compression to *b*, return along the lower line to zero stress and then to elongation at *c*, return along the upper line through zero stress and then to compression ending at *d*, and so on through *e*, *f*, *g*, *h*, and back to zero stress. It will be observed that in the first application of stress, amounting to about 3,000 pounds on the square inch in tension, the specimen was not sensibly changed in length. There is no indication of want of perfect elasticity beyond a slight thickening of the line in the central portion indicating the ordinary viscous action. It is quite common, however, to find that much smaller intensities of stress will cause permanent set in cast iron. Some specimens of cast iron seem to bear out Hodgkinson's statement, that no load can be applied which does not produce set. When a load has once been applied, a repetition of a smaller load in the same direction does not greatly affect the length. If, however, the load be reversed in direction, the line of the diagram is quite markedly curved from the start. Any elastic limit to stress which the material may possess is thus entirely eliminated by applying opposite stresses sufficient to produce a very slight permanent set. Not only is the elasticity destroyed, but the initial direction of the line from the position of zero stress is changed. The Young's modulus of elasticity (determined, say, by applying a moderate stress and removing it once or twice, at the same time measuring the change of length) is diminished. This is very clearly shown in Fig. 218, the axis of the diagram becoming steeper with each successive alternation and increase of stress. There is not, properly speaking, any definite modulus of elasticity for cast iron, because the rate of change of length (or of other distortion) with change of load depends both on the amount of the load and on the direction of the change of stress. This will be at once appreciated by observing the closed loops in the diagrams, Figs. 219 and 220—these loops representing the relief and reapplication of the stress. That such loops are obtained from cyclic changes of stress in cast iron and many other materials has been known for many years, but the great effect which they have on the apparent elastic constants does not seem to be always appreciated.

The diagram, Fig. 219, was obtained from a part of the same specimen used for the tests recorded in Fig. 218. The test piece was 8 inches long and 1.5 inches diameter. The force and elongation constants are the same as in Fig. 218. In this case the load was three times slowly removed so as to show the curves of application and relief of load nearly free from permanent set. It will be noticed that the lines joining the extremities of the loops are not parallel; and that the departure from parallelism is not entirely accounted for by the curvature of the sides of the loops. There is quite a considerable diminution of the elastic constants, apparently due to the permanent set. This is much more than would be accounted for by change of section. A similar change will be referred to when discussing the behavior of steel, in which case it is only temporary. Whether the modulus of elasticity of cast iron changes with time after permanent deformation has not yet been determined. The diagram shows the test to fracture and indicates a tensile strength of a little over 15,000 pounds per square inch. The specimen was a gray cast iron, somewhat coarse grained and porous.

The diagram, Fig. 220, was obtained from a specimen taken from the other end of the same piece. The specimen was 6 inches long, 2 inches diameter at the ends, and the middle three inches turned down to a square-inch section. The test was on

position of zero stress is changed. The Young's modulus of elasticity (determined, say, by applying a moderate stress and removing it once or twice, at the same time measuring the change of length) is diminished. This is very clearly shown in Fig. 218, the axis of the diagram becoming steeper with each successive alternation and increase of stress. There is not, properly speaking, any definite modulus of elasticity for cast iron, because the rate of change of length (or of other distortion) with change of load depends both on the amount of the load and on the direction of the change of stress. This will be at once appreciated by observing the closed loops in the diagrams, Figs. 219 and 220—these loops representing the relief and reapplication of the stress. That such loops are obtained from cyclic changes of stress in cast iron and many other materials has been known for many years, but the great effect which they have on the apparent elastic constants does not seem to be always appreciated.

The diagram, Fig. 219, was obtained from a part of the same specimen used for the tests recorded in Fig. 218. The test piece was 8 inches long and 1.5 inches diameter. The force and elongation constants are the same as in Fig. 218. In this case the load was three times slowly removed so as to show the curves of application and relief of load nearly free from permanent set. It will be noticed that the lines joining the extremities of the loops are not parallel; and that the departure from parallelism is not entirely accounted for by the curvature of the sides of the loops. There is quite a considerable diminution of the elastic constants, apparently due to the permanent set. This is much more than would be accounted for by change of section. A similar change will be referred to when discussing the behavior of steel, in which case it is only temporary. Whether the modulus of elasticity of cast iron changes with time after permanent deformation has not yet been determined. The diagram shows the test to fracture and indicates a tensile strength of a little over 15,000 pounds per square inch. The specimen was a gray cast iron, somewhat coarse grained and porous.

The diagram, Fig. 220, was obtained from a specimen taken from the other end of the same piece. The specimen was 6 inches long, 2 inches diameter at the ends, and the middle three inches turned down to a square-inch section. The test was on

the middle three inches under compression. The test did not extend quite to fracture, as the specimen became badly bent; but a test on a short piece of the same iron showed that very nearly the breaking load had been applied. The scale for forces, measured downwards, is in this 12,770 pounds per inch, which, since the cross-section was one square inch, gives the intensity of stress. The elongation measured to the right was magnified forty times.

The results obtained from experiments on iron and steel were similar to each other. One series is illustrated in Fig. 221. This specimen was cut from a bar of soft steel $1\frac{3}{8}$ inches diameter; the part under test was 3 inches long and $1\frac{1}{8}$ inches diameter. The ends were left long enough to enable the tension tests to be made by means of the ordinary V grips supplied with the Riehlé testing machine. The compression tests were made by applying pressure directly to the ends of the bar. The arrangement here described is unsatisfactory, and in a continuation of the experiments will be modified. Referring to the figure, the first test consisted in applying pressure up to the yield point at *a*. A slight compression, about $\frac{1}{700}$ of an inch, was here produced. The load was then allowed to diminish slowly to zero and the specimen put in position for tension. The tension was also carried to the yield point and a small elongation produced, as shown in the diagram between *b* and *c*. The load was then reduced to zero and compression again applied. The pen now passes round a smooth curve to *d*, no definite yield point being visible. The load is again reduced to zero and tension again applied, the pen again giving a smooth curve to *e*, after which the load was reduced to zero.

The scale for forces on this diagram was 7,485 pounds to the inch, and the elongation was magnified one hundred and eighty-nine times. The first compression line on the diagram is nearly straight but slightly convex, and its slope is such as to indicate a modulus of elasticity of about 29,500,000 pounds per square inch. This is about the normal value for the steel. When we come to the first tension line, however, we find that the modulus is much smaller, with perhaps the exception of the very beginning of the line. The tracing is slightly in error, as the original is a little more curved. The yield point at *b* is approached by a round curve, but the effect of the slight permanent set at *a* is comparatively small. The effect of the permanent elongation represented by *bc* on the next compression curve is very great. Instead of obtaining almost a straight line from zero stress to a definite yield point, the material seems to have almost entirely lost its usual elastic properties, and behaves now very much like a piece of cast iron. The same is the case with regard to the second application of tension, and the same thing is repeated no matter how many cycles are gone over. It appears, however, that a moderate permanent set is necessary before this peculiar inelastic condition is produced, and the investigation of the effect of a large number of applications of stress, no one of which reaches the yield point stress for the material in its original state, has yet to be made.

The change in the modulus of elasticity for extension which is apparently produced by compression is to some extent retained after the material has been permanently elongated. It has been observed, however, that, in ordinary testing, if the load is relieved after the material has been stretched beyond the yield point the curve for the relief of load is steeper than the curve previously obtained in the same test for the application of the load. If, however, the specimen be allowed to rest for a day or two and again tested for elastic modulus, it will be found to have recovered its original elastic constant. The lowering of the modulus is thus found to be temporary, and its recovery with time adds one more to the curious effects of rest after deformation.

[NOTE.—This paper received discussion jointly with the other paper by the same author, entitled: "The Yield Point of Iron and Steel." The discussion on it is published at the end of that paper, which is numbered DCCXXXI., and will be found at page 714 of the present volume.—*Secretary.*]

DCCXXXI.*

THE YIELD POINT OF IRON AND STEEL.

BY THOMAS GRAY, TERRE HAUTE, IND.
(Member of the Society.)

UNDER this heading I propose to describe the diagrams of a few tests, all of which have some bearing on the peculiar behavior of iron and steel as they pass through the "yield point." The paper is mainly illustrative of the kind of results which have been obtained with the autographic apparatus described in Volume XIII. of the Society's proceedings. Frequent inquiries which I have received from members of the Society and others have led me to believe that a few such sample diagrams would be interesting.

Fig. 222 illustrates tests made on two specimens of the same bar iron. The first tests, marked *A* and *B*, have the elongations magnified forty times, and illustrate the fluctuations of strength as the elongation is carried through the yield-point notch, and incidentally the almost perfect elasticity of this sample of iron for stresses below the yield point. The tests marked *A'* and *B'* were made on the same specimens about six weeks later. In these tests double records were taken, one of which magnifies the elongation 337 times and the other 3 times. These tests illustrate the great increase in strength to the yield point, due to rest between the tests, and also the interesting feature, which appears also in all the other diagrams—namely, that there is again almost as decided a yield-point notch in the curve as there was in the first test. One other interesting feature of this test is the difference between the curves *A'* and *B'*. It was discovered, before proceeding with the second tests, that one of the specimens had a crack extending apparently about an eighth of an inch into one side. As will be seen from the record, this had practically no effect on the modulus of elasticity, but reduced the strength a little at the yield point and considerably at

---

* Presented at the Hartford meeting (May, 1897) of the American Society of Mechanical Engineers, and forming part of Volume XVIII. of the *Transactions.*

rupture. The most marked effect, however, was on the total elongation before rupture, local stretching setting in at this point much earlier than it did in the other specimen. The departure from perfect elasticity is better shown by higher magnification, but the apparent smoothness of the yield-point elongation is due to there being only a small part of the notch included in these curves.

The curves in Fig. 223 illustrate a series of tests on a bar of iron similar to that used for the tests illustrated in Fig. 222. The tests were made at intervals as indicated by the dates marked in the curves. The elongation was not in any case carried past the yield-point notch, and the specimen was finally broken without increase of strength above the yield point. Continuous tests to rupture showed this iron to have a strength of from 50,000 to 53,000 pounds per square inch, while the strength of this particular specimen went up to 55,900. The yield point was thus raised above the ordinary total strength of the iron. The total elongation was reduced from 29 per cent. to 14.5 per cent., and probably could have been reduced much more by properly arranging the successive elongations and periods of rest. When proper allowance is made for change of section the modulus of elasticity remains nearly constant in this case. As a general rule, however, in such tests the first two or three elongations slightly diminish the modulus, while subsequent elongations increase it.

Fig. 224 illustrates a series of tests on a specimen of Bessemer steel. The results are similar to those for the specimen of wrought iron described under Fig. 223, with the exception that greater elongations in the first two tests bring up the strength rapidly, while subsequent tests show little increase of strength. This has been found to be the case in a number of tests. The increase of strength with rest seems to take place most rapidly if the elongation is carried, at each experiment, to the top of the yield-point notch in the diagram. The amount of increase of strength to the yield point with a given period of rest is apparently roughly proportional to the amount of permanent elongation along the yield-point notch, but no great advantage, if any, is obtained by going beyond it.

The curves in Fig. 225 illustrate tests on two specimens cut from the same bar of steel. The curves *A* and *A′* give the double record for a continuous test, the data for which are marked

FIG. 222.

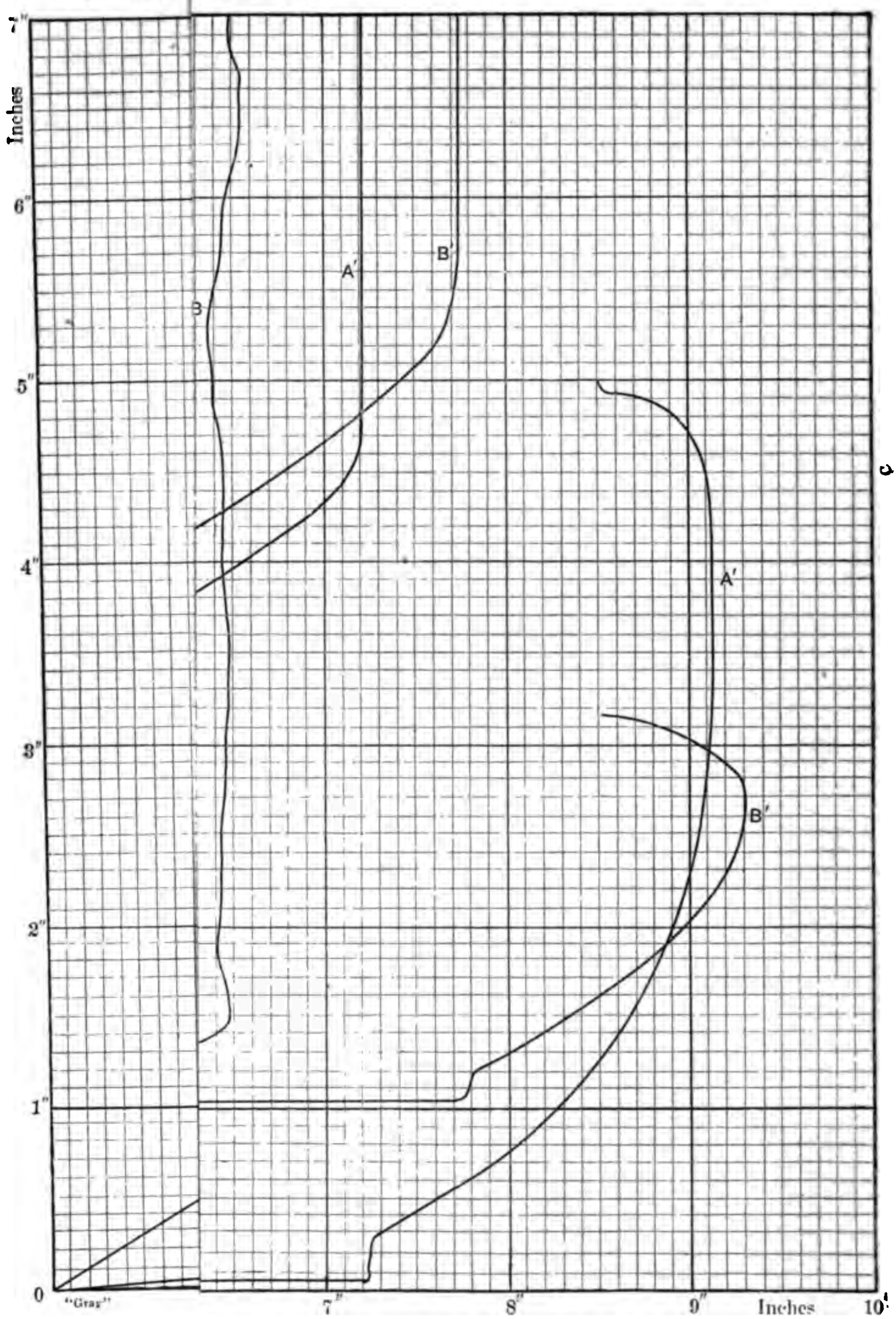

rupture. The most marked effect, however, was on the total elongation before rupture, local stretching setting in at this point much earlier than it did in the other specimen. The departure from perfect elasticity is better shown by higher magnification, but the apparent smoothness of the yield-point elongation is due to there being only a small part of the notch included in these curves.

The curves in Fig. 223 illustrate a series of tests on a bar of iron similar to that used for the tests illustrated in Fig. 222. The tests were made at intervals as indicated by the dates marked in the curves. The elongation was not in any case carried past the yield-point notch, and the specimen was finally broken without increase of strength above the yield point. Continuous tests to rupture showed this iron to have a strength of from 50,000 to 53,000 pounds per square inch, while the strength of this particular specimen went up to 55,900. The yield point was thus raised above the ordinary total strength of the iron. The total elongation was reduced from 29 per cent. to 14.5 per cent., and probably could have been reduced much more by properly arranging the successive elongations and periods of rest. When proper allowance is made for change of section the modulus of elasticity remains nearly constant in this case. As a general rule, however, in such tests the first two or three elongations slightly diminish the modulus, while subsequent elongations increase it.

Fig. 224 illustrates a series of tests on a specimen of Bessemer steel. The results are similar to those for the specimen of wrought iron described under Fig. 223, with the exception that greater elongations in the first two tests bring up the strength rapidly, while subsequent tests show little increase of strength. This has been found to be the case in a number of tests. The increase of strength with rest seems to take place most rapidly if the elongation is carried, at each experiment, to the top of the yield-point notch in the diagram. The amount of increase of strength to the yield point with a given period of rest is apparently roughly proportional to the amount of permanent elongation along the yield-point notch, but no great advantage, if any, is obtained by going beyond it.

The curves in Fig. 225 illustrate tests on two specimens cut from the same bar of steel. The curves *A* and *A'* give the double record for a continuous test, the data for which are marked

FIG. 222.

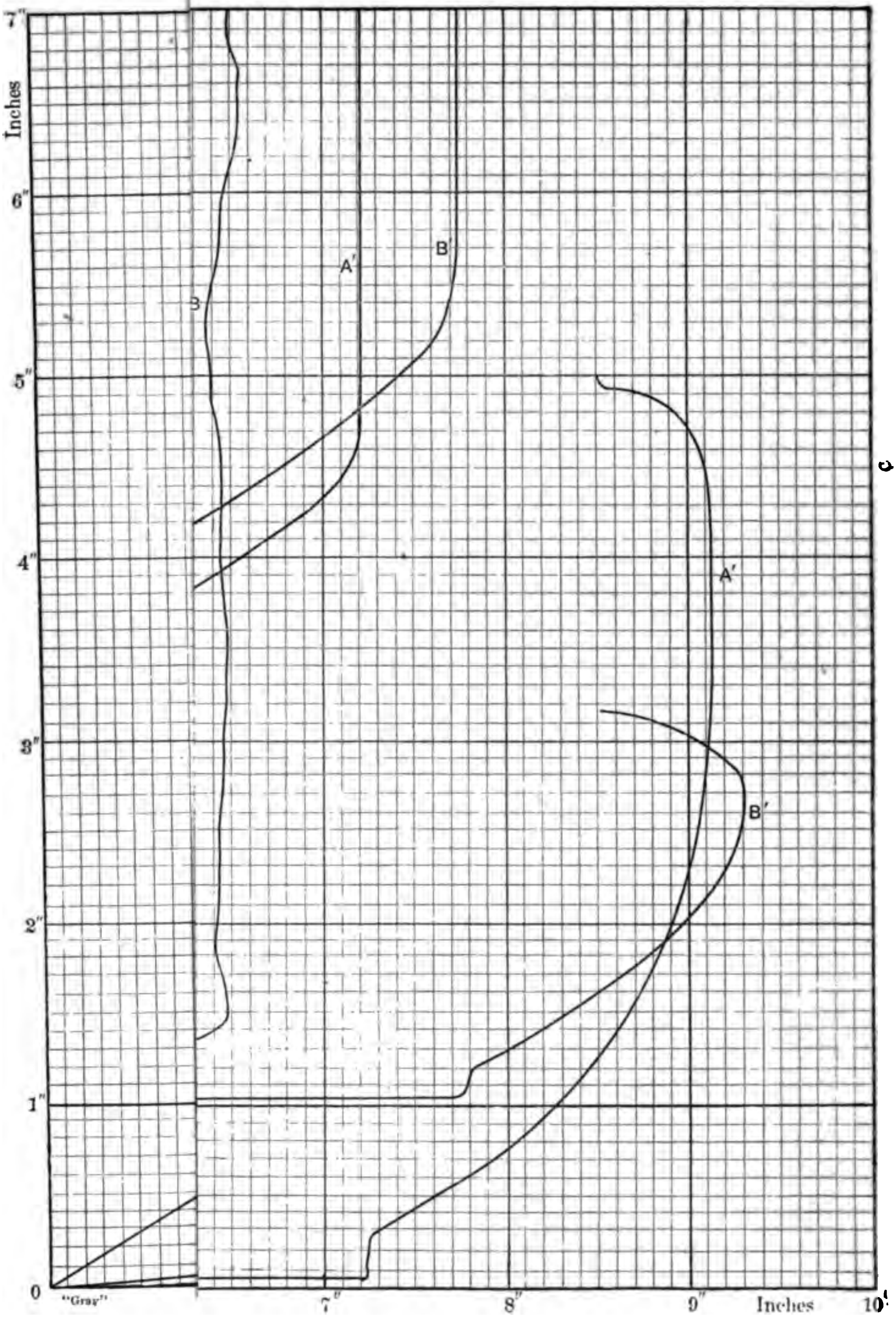

on the diagram. The steel is very soft and shows considerable departure from perfect elasticity before the yield point is reached. Curve *B* shows the yield-point curve with the elongation magnified forty times, the load being added very slowly, as indicated by the figures which give the time in minutes from the beginning of the test. The first elongation was carried to the point *a* on the curve *B*,' or considerably beyond the yield point. After a rest of 17 hours, the specimen remaining in the machine, it was stretched to *b*, and then allowed to rest for 24 hours, after which it was stretched to *c*, and again allowed to rest for 24 hours, when it was broken. The total strength was considerably increased by this operation, but the elongation was reduced fully one-half. The beginnings of the yield-point curves on the forty magnification are shown in the diagram, but are not continued through. All of the elongations except the last were made very slowly. It would appear from this experiment that comparatively little time is necessary to raise the yield point up to the limit of strength of the material or to temper the specimen almost to the condition of hardened steel for unidirectional stress. The application of stress beyond the yield point in the opposite direction, at once destroys the effect of this tempering,* but whether the material can have its original power of elongation restored I am not yet able to say.

The diagram, Fig. 226, was taken from a flat specimen of structural steel plate. The specimen was one-half inch thick by two inches wide. The curves are given to illustrate the wide divergence in the character of yield-point curves. In a large number of cases the yield-point part of the curve begins somewhat sharply, and is followed by a retrograde movement of the pen, showing a loss of strength, after which the curve is very irregular, indicating successive increases and diminutions of strength. Very commonly there is a sharp diminution of strength just before the notch is passed. It is not at all uncommon, however, in the harder steels to find scarcely any yield-point notch, and curves approaching that of Fig. 226, which may be taken as the other extreme, may frequently be found. The variable character of the initial stage of this part of the diagram of tests makes it somewhat difficult to define what is to be taken as the yield point, and hence is likely to lead to disputes as to the fulfilment of specifications.

---

* See Report of Tests at Watertown Arsenal.

The general character of the jagged line forming the yield-point notch may be greatly modified by the form of the specimen. Take, for example, a specimen having the same cross-section throughout, or having the cross-section on the test part the same as that for a short distance outside of it. Then the part outside the test may stretch and lose strength, while the test part remains of the same length. This gives rise to an apparent loss of strength without elongation, and hence produces a very sharp retrograde movement of the recording pen in an autographic apparatus. It is not unusual to find the pen travel back some distance on the same line it came forward on, and then to move straight up, showing elongation to be produced on the test piece with less force than had previously been applied. This seems to indicate that when the material breaks down at one place, which may be outside the test length, the process of collapse travels along the specimen. Very slow application of the load, extending in some cases over several hours, has been tried with the object of determining whether under these circumstances the irregular character of the curve at the yield point would disappear. The results so far obtained have led to practically nothing beyond perhaps an indication in the direction of less irregularity. The irregularities are certainly not eliminated. If it were possible to test the same specimen several times and at different rates of loading, definite results might be quickly reached. In the actual case, however, separate specimens have to be used for the different tests, and these, even if all are tested in precisely the same way, do not give similar curves. It becomes necessary, then, to work from averages, and generally these are unsatisfactory because of the small number of specimens which can be obtained from one bar and the variation of the quality of the bar from point to point along its length. Why such a notch should exist at all and why it should repeat itself after each successive rest between tests, are very interesting problems in molecular dynamics.

DISCUSSION.

Prof. Charles H. Benjamin.—The diagrams which accompany this paper are of special interest, since many of them are drawn on such a magnified scale as to show clearly the elastic condition of the material before reaching the yield point.

The magnified curve in Fig. 226 shows a peculiarity which I have often noticed in structural steels and, to a certain extent, in all steels—*i.e.*, a variation in the elasticity long before the so-called elastic limit was reached, making it difficult to locate the yield point or to assign any definite value for E.

I have noted the same peculiarity in both tensile and transverse tests of cast iron.

I would like to inquire how the value of E given for Fig. 226 was calculated—that is, what point in the curve was assumed for this purpose.

Mr. Gus C. Henning.—Some of the results which Professor Gray gives us in his paper on the repeated stress were so interesting and so novel that I thought it worth while to rig up a machine, the Columbia College testing machine, and, with the assistance of Professor Woolson, to repeat the tests, and as we did not have time enough to complete them we will continue and present them to the Society later; but we have done enough (of course, I use my own little recorder, which, even with its small multiplication, is sufficient) to get at some results, which apparently verify many of the points that Professor Gray has mentioned, and the change or the difference in elastic limit. The change in the elastic curve of the best of cast iron, under repeated compression and tension, is clearly marked. The modulus of elasticity under compression is considerably higher in this particular kind of cast iron than it is in the case of tensional stresses, and not only that, but as we repeat these stresses the moduli in every case decrease; so if we put the diagrams as we obtain them we will get results similar to those of Professor Gray.

There has been a very considerable discussion in the *Engineering News* about yield point and elastic limit. Now, Professor Gray's recorder points out exactly what a great many people who do rapid commercial testing have denied to be a fact, and what those who have investigated it carefully, have said was one. All of these curves show that. I prefer to draw my diagrams different from Professor Gray's, because pretty nearly everybody else does, and for another reason: that it is more readily visible. As the stress increases, the deflection increases. Here (Fig. 227) you see I have drawn a slight kink at *d* in it. The line *abc* changes—it falls off, then it runs up to *d–c*. Now, most people deny that there is any possibility of determining the elastic limit as distinct from the yield point, and that engineers should not use the elastic limit, as distinct from the yield point, as a factor or a point from which to start their basis of calculation for loads applied. Now, this little recorder and Professor Gray's invariably show a sudden change there at *d*, which is distinctly the limit of proportionality as defined by all the European investigators, and further beyond a distinct yield point at *c*. From *d* to the material stretches materially without increase of load. From *a* to *b* it stretches very little

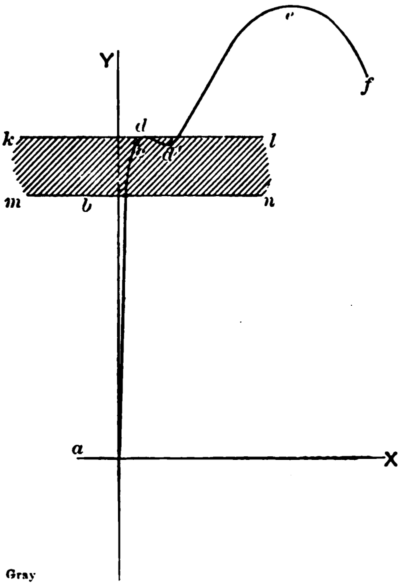

FIG. 227.

indeed. The limit of proportionality as defined by Bauschinger and the French official commission is at *b*. But while change in curve *a*–*b* is not very well defined, *d* is generally well defined and *c* always is particularly distinct; but when determined by drop of the beam no one knows whether it is *c* or whether it is not as Professor Gray just showed. Now, as the drop of the beam is solely a function of the stretch of the material, the man who habitually works by drop of the beam will say that *d*—or let me say, or any point within *kmln*—is the yield point—just about as close as that. And that is the point. Now, if a recorder is used—I do not care whether it multiplies five times or five hundred times—it will invariably be known that *c* is the yield point, because before you get to that point you will find exactly what I have shown at *d*—although slightly—a change in that curve. Now, when any person carefully investigates things by recorders of this sort or of any kind which do their work correctly, he will always know that there is an elastic limit (limit of proportionality) and a yield point, and there will be no question about it. But when you work by drop of the beam there may be everything under the sun to vitiate results—the slip in the wedges, slip in one wedge or in another wedge, the compression of the whole machine, being built of cast iron; the carelessness of the man, the inertia of the machine, and several other things besides, especially the intentional location of the yield point at any given point to fill the specifications; but the diagrams will always tell where *d* and *c* are, and in view of these diagrams, especially emphasized by Professor Gray's paper, it cannot be denied that there is a distinct difference between elastic limit and yield point; and I point this out so clearly, because some people who ought to know better have insisted upon it, that for all practical purposes the determination of yield point by drop of the beam is sufficient. If engineers want to know what their materials are they might just as well be a little more careful and not take these fictitious high values of qualities of material, because they will invariably make a mistake. You may say that the factor of safety covers the mistake. It does not. It does in some materials, but it does not in all. Now, this peculiar behavior in plate iron is due to one fact especially. It is due to cold rolling more than anything else. If the material is a very hard material, the modulus of elasticity will be practically the same, but the elastic limit and the yield point will be changed, and just as soon as a material which approaches the higher carbon steels is tested, the curve will be smooth and continuous without kinks, and in the case of structural steels, when cold-rolled, because they did not pass through the rolls hot enough, a very marked indication of the yield point much too high will be obtained, although the elastic limit will be indicated just as nicely as when the material is properly rolled. If the steel is a higher carbon steel, for instance .45 carbon, where the strength runs up to eighty or eighty-five thousand, then a rapidly and gradually changing smooth curve will be obtained, whether it is properly rolled or not. In tool steel you will get almost a smooth curve, and then the drop of the beam is useless to determine the yield point; but Professor Gray's recorder will show it very well. It is shown on his curves. It is very pretty indeed to show what a slight check in the test-piece produces in results; while if the bar had been tested without a recorder this difference of behavior would hardly have seen seen, and the difference in elongation there would probably have been ascribed to other reasons than the correct one. This beautiful illustration of the raising of the elastic limit shows another thing. If the curve be foreshortened (Fig. 223) the elastic limit will be clearly seen somewhere below that yield point, and it will be found that in further raising of the yield point the new curve will be different from the first, and the curve will show that the material has been once strained. Therefore if you have a material once strained and then observe that material under a reapplied strain, the diagram will show it. The testing by sight or by hand will show nothing of the sort, and it is only too easy to fabricate results by those methods.

Now, in regard to another point that is raised by Professor Gray—he said he had not investigated the effect of the repeated application of stress within the elastic limit. We have done that, and so far as we can see we can find no change whatever. If we remain well within the elastic limit we can repeat the tension stresses frequently—I do not say as often as we like, but frequently—without showing the slightest effect on the curves; but just as soon as we reach the elastic limit without even passing beyond it, then there will be a marked change in the curve, and the material changes its character totally.

I can only say that I am most pleased with what Professor Gray has shown in his paper, because I think it will settle all the discussion on some of the points which have been talked about so much, especially by those who knew least of them.

Professor Gray.—In regard to one or two of the points that Mr. Henning has spoken of, it may be well to give some explanation. With regard to the curved points in the diagrams for cast iron, given in my paper, I may say that the amount of rounding at the points depended largely upon the length of time between the stoppage of increasing load and the beginning of decreasing load. The material was in a semi-plastic condition when stretched to the degree given there, and gradually yielded. A certain time, perhaps amounting to half a minute in some cases, elapsed between the increasing and decreasing loads, giving a slight rounding of the curve. There is, of course, one way in which the rounding of the curve may occur, and it may be as well to mention it, because it is one thing that ought to be taken account of in making tests of that character. If the machine be imperfect, if the machine be frictional—I do not mean the recording mechanism, but the machine itself—it will do that kind of thing; it will not respond promptly when the load is reversed. In the case here considered the amount of friction, although not negligible at all, was not enough to give the curve-point. It was due to the flow of the material undoubtedly in that case.

Then, with regard to the change of modulus, as shown by my curve, it may be well to point out that those moduli were calculated for each case from the actual cross-section for that case, and a certain part of this change in the line which is shown in the curves was due to diminution of section, not all of it. There is a change of modulus, but it is so small that I do not know that any inspector of materials could base any objection on it. I think it is rather within the limits of ordinary variations of the material. The modulus changes in one direction for several successions of load and rest, and generally changes in opposite directions for further continuation of the experiment. Several of these points are quite interesting physically, but discussion of all the points that come up in connection with those curves would make the paper into a volume.

Then, as regards stress below the elastic limit, I had not investigated enough to say anything definite upon it. I have applied stresses and taken them off several times, and found no noticeable result. But whether, if we continue to put these stresses on and off, instead of one or two times one or two hundred times, we would not get something, is still to be demonstrated. I think that is one thing that we have to investigate in the near future to satisfy ourselves on.

Mr. O. C. Woolson.—With regard to Professor Benjamin's question as to what part of the diagram was used in calculating the values of E given in the paper, I may say that my usual practice is to take the part beginning at zero load. The line tangent to the curve at zero load *practically* lies along the curve up to a considerable fraction of the yield-point load.

What do we understand Mr. Henning means by keeping well within the elastic limit? Are we to infer from that that he suggests making any change from present practice regarding this rather unknown quantity?

Mr. Henning.—I can answer Mr. Woolson this way: Before you make any calculations have your material carefully tested by a man who knows his business, and let him tell you what are the safe loads to be applied. Load materials are changing every day, especially at present, when they are beginning to mix iron and copper, and aluminum, and everything else. We know our trolley wire can be stretched more than any one knew copper wire could be stretched before without breaking down; but whether that wire can be permanently kept in that position without breaking we do not know. We know that trolley wires break for various reasons, but whether that is not due to the change of condition on account of that band *klnm*, which I have represented to be one-quarter inch wide, representing the location of the yield point or the elastic limit, we do not know, but if that quarter-inch of variation in that diagram means a difference in load of, say, 5,000 pounds, as is easily possible in the present machines, or the present methods used in testing, why, then, supposing that you apply a factor of safety of four, you may approach the elastic limit, which was away below that, so closely that you are running risks of stretching your material permanently every time you apply your working loads. When you consider that instantly you apply loads greater than working loads in machinery, you are exceeding the low factors of safety which are based on ultimate strength, it is obvious that we must know somewhat nearer than the position of the quarter-inch strips where the elastic limit—not the yield point—is actually located.

DCCXXXII.*

ON RATING ELECTRIC POWER PLANTS UPON THE HEAT-UNIT STANDARD.

BY WM. S. ALDRICH, MORGANTOWN, W. VA.
(Member of the Society.)

THE progress of power-plant engineering has reached such a stage of development that electric power plants should be contracted for on a somewhat similar basis of guaranteed performance as that now in vogue for pumping plants. There should be guaranteed a definite output, in the case of the electric plant, to be measured at the switchboard and expressed in kilowatts per 1,000,000 B. T. U. supplied to the steam used in the whole plant.

Following are some of the advantages of having such a standard for this purpose founded upon the heat-unit basis:

(1) *It is a simple basis, involving quantities easily measured.*

B. T. U. Input.—The computation is based upon the quantity of heat required to raise all of the feed water from its temperature to that of the steam at the boiler pressure, with such additional determinations and allowances as are now regularly made in obtaining the similar quantity of heat supplied in the duty trials of pumping engines.

Kilowatts Output.—The work is obtained from corrected voltmeter and ammeter readings, at the switchboard, for a definite interval of time at a given specified load, which is maintained uniform throughout.

(2) *It applies to all plants operated by any kind of heat-engine.*

The present way of stating such performance is: (*a*) Kilowatts per pound of coal; (*b*) kilowatts per cubic foot of gas; (*c*) kilowatts per gallon of oil—according to the kind of heat-engine furnishing the motive power for the plant. The proposed stand-

---

* Presented at the Hartford meeting (May, 1897) of the American Society of Mechanical Engineers, and forming part of Volume XVIII. of the *Transactions*.

ard is superior to such ratings as the former, and furnishes a common, practical, and scientific one for all of them. They involve the efficiency of the boiler or of the gas producer, and this last requires the determination of the thermal value of the fuel. It is not alone the difficulty of such determinations but the unsatisfactory nature of the fuel basis which has led to its disuse in pumping plants.

(3) *It forms the most satisfactory basis for comparison of plants.*

Efforts are being continually made to obtain such ratings for existing electric power plants as will enable the probable performance of similar projects to be predetermined when installed and operated in like manner. Sufficient and reliable data may be obtained at various proportional parts of the full load of the plant as will enable one to determine what may be called the "characteristic" of the particular type of electric power plant under consideration. The inherent advantages of each type of plant will then appear in its characteristic curves, showing the variations in its efficiency and economy at various proportional parts of its full load or of its rated normal capacity. Then it will be possible to compare, at different loads, system with system and plant with plant. Such determinations and comparisons will be all the more valuable if based upon commonly-accepted standards and ratings, such as the heat-unit proposed.

(4) *It will facilitate the predetermination of the performance of electric power plants.*

The engineering precedent which will be established by such a standard will promote the predetermination of the efficient and economic performance of electric plants quite as much as similar ratings have accomplished for pumping plants. While both units are rarely built by the same concern, as in the case of the latter, still this should not debar the installing engineer from advocating the use of such guarantees based on the heat-unit basis if his work is to hold its own in the light of the guarantees and contracts made in other branches of engineering, and notably so in the installation of pumping machinery.

(5) *It will promote the most economical arrangement of plants.*

The power plant is an aggregation of units and of an ever-increasing complexity. It is therefore quite as essential to have the whole system economically arranged as to have the most economical units. It is this economy of arrangement or of installation, so to speak, which, in a measure, the duty of a pumping plant so clearly expresses when based upon the heat-unit standard. It is such a method of stating the final outcome of the arrangement of all of the details of a power plant of which designers, builders, managers, and owners wish to know the value.

(6) *Heat-unit specifications will form a proper basis of agreements.*

Builders of both engines and dynamos are equally interested in the adoption of some such common standard. Unfortunately, however, in many cases this interest extends only so far as the economic performance is concerned of the individual machines which they manufacture.

(7) *Contract trials of electric plants should be based on heat-units.*

Contract trials of the completed plant are necessary to establish the guarantees of satisfactory fulfilment of contract as to both efficiency of installation and economy of operation. The present method of basing the performance of such upon the final plant efficiency is misleading. In electric installations, particularly, there is a set of conditions insuring a maximum value for such an efficiency, usually at some fractional load. There is also in such plants another set of conditions, at some other load, insuring maximum economy of operation of the engine. Only contract trials for definite periods of time, at specified and uniform loads (at various proportional parts of the full load), will enable all claims to be adjusted regarding guaranteed efficiency or economy, when such is based upon the quantity of heat supplied to the system in thermal units.

(8) *It will advance this industry along engineering lines.*

The business of power-plant design, construction, installation, and management is not altogether in a formative period. Nevertheless, when an electric power plant can be contracted for on the basis of so many kilowatts output per 1,000,000 B. T. U. in the steam supplied to the plant, and that at a certain specified load, or proportional part of the full load, then we may expect somewhat the efficiencies, economies, guarantees, and contracts now being regularly realized in some of the other lines of power generation.

The subject is developed in this paper as follows:

(1) The heat-unit as a basis for rating steam power plants.
(2) The heat-unit required for such a standard.
(3) Present use of the heat-unit in steam pumping plants.
(4) Present way of stating performance of electric plants.
(5) The load factor in power-plant ratings.
(6) Proposed use of heat-units in electric plants.
(7) Determination of the heat supplied to the steam.
(8) Performance of the boiler not in evidence.
(9) Determination of work done by electric generators.

(1) THE HEAT-UNIT AS A BASIS FOR RATING STEAM POWER PLANTS.

It is not the purpose of this paper to review the line of argument for such a use of the heat-unit as a standard basis for rating and comparing the performance of steam power plants in general. Nor is it proposed to advocate anew the great value of heat-unit specifications as the proper basis of agreement between contractor and builder, on the one hand, and the subsequent contract trials on this basis as the most satisfactory means of adjusting all claims in power-plant installations, on the other hand.

The heat-unit is the most scientific basis for the engineer to use in stating the final performance of any power plant driven by a heat engine. It is, in consequence, the most satisfactory standard upon which to base an agreement between the contracting parties for the installation.

The merits of the heat-unit standard in these particulars cannot be longer open to discussion. It has been so completely defined for pumping plants, for instance, and is in such constant and satisfactory use in this branch as to prove its engineering value.

Heat-unit ratings are also coming into more general use as the most suitable standard upon which to base the performance of prime movers in power plants deriving their energy from fuel, whether by steam engines or other heat engines. The value of such a standard has been ably advanced by Prof. C. H. Peabody in a paper* before this Society, from which we quote as follows:

"It is customary to state the performance of a steam engine in pounds of steam used per horse-power per hour, a method which is open to objection, since the value of a pound of steam depends on the pressure and quality of the steam. It has frequently been urged upon the attention of engineers that the British thermal unit (B. T. U.) should be used in stating the performance of engines. . . . In order to obtain convenient numerical quantities it is advisable to state engine performance in British thermal units per horse-power per minute. Incidentally, this method has the advantage that it may be used for any heat engine, such as a hot-air engine or a gas engine."

(2) THE HEAT-UNIT REQUIRED FOR SUCH A STANDARD.

The acknowledged scientific standard of temperature, of 0 degrees Cent., is evidently impracticable for a heat-unit standard. Prof. H. A. Rowland has shown that such a temperature is out of the question, because the mechanical equivalent of heat is not definitely determined and probably cannot be at this critical point. Nevertheless, such is the basis of the scientific heat-unit, the calorie—the quantity of heat required to raise the temperature of one kilogram of pure water one degree from 0 degree Cent.

The temperature of 39.1 degrees Fahr., at which water attains its maximum density, is equally undesirable, notwithstanding that it is the old British standard temperature of the days of Rankine. The determination of the mechanical equivalent of heat at this critical temperature offers similar difficulties to those of the freezing point. At neither of these points can the specific heat of water be satisfactorily determined.

"There is practical convenience in choosing 62 degrees Fahr. for the standard, because it is near the mean temperature of the air during experimental work," as Prof. C. H. Peabody has pointed out. Besides, the specific heat of water may be definitely known at this temperature; therefore "it is more scientific to take an easily verified quantity for the standard."

The British thermal unit now used, or the mechanical equiv-

---

* *Transactions* of the American Society of Mechanical Engineers, vol. xiii., No. 484, on the "Economy and Efficiency of the Steam Engine," by C. H. Peabody.

alent of the heat required to raise the temperature of one pound of water one degree from 62 degrees to 63 degrees Fahr., is that of Professor Rowland's determination, of 778 foot-pounds. This temperature is also that of the new British standard of weights and measures, and more clearly approaches the 15 degrees Cent. of the French standard—a temperature frequently used and readily maintained in electrical and other testing work.

The only objection to the British thermal unit used in connection with the watt is that this heat-unit is not, like the watt, one of the units based on the scientific standards of the C. G. S. system. Of course, such a heat-unit is to be found in the calorie. But its mechanical equivalent requires that the most accurate scientific measurements be made at the critical temperatures for water, which have been found to be quite impossible of determination.

(3) PRESENT USE OF THE HEAT-UNIT IN STEAM PUMPING PLANTS.

The use of the heat-unit in this connection was first suggested* by Dr. Chas. E. Emery, member of this Society. He proposed that the duty of pumping engines should be based upon the foot-pounds of work done by the steam pump on an expenditure of 1,000,000 B. T. U. in the steam supplied to the plant.

The adoption of this standard was the logical outcome of the old one, by which the "duty" was rated in foot-pounds per hundred pounds of coal burned under the boiler. The ordinary specification of an evaporation of 10 pounds of water, from and at 212 degrees Fahr., under atmospheric pressure, would result in 965,700 B. T. U. supplied to the whole plant per hundred pounds coal burned under the boiler. Another advance was made when it was proposed to state this "duty" on the basis of the 1,000 pounds of feed water supplied to the system, rating the heat units per pound of water evaporated as before, from and at 212 degrees Fahr. But it was clear that the efficiency of the boiler should have nothing to do with the "duty" of the pumping engine. It was therefore but a slight step, and one in the right direction, to change the standard to that of 1,000,000 B. T. U. in the steam supplied to the plant.

---

* United States Centennial Commission, International Exhibition, Group XX.; vol. vi., pages 21 and 115 of the Report of the Judges.

Such use of the heat-unit was further considered before this Society in the "Report of Committee on a Standard Method of Conducting Duty Trials of Pumping Engines." * The adoption of this method has since resulted in most remarkable developments in this branch of industry. Unprecedented economies of pumping engines have been brought about. Installations and contract trials upon such a basis have furnished valuable engineering precedent. The "duty" of pumping engines can be so closely approximated that binding contracts are willingly entered into by the builders. Bids are advertised for with the understanding that "No bids will be considered offering less duty than 130,000,000 foot-pounds."

The question was opened afresh and the cause further promoted by Mr. A. F. Hall in a recent paper † before the Society, in which he writes thus:

"But why use variable quantities as coal and steam for units when the heat-unit is just as simple to obtain and use, and one which requires but little study to understand? . . . It has in it the elements of simplicity, and places all engines upon an equal footing for comparison, which no other proposed method does."

(4) PRESENT WAY OF STATING THE PERFORMANCE OF ELECTRIC POWER PLANTS.

It has been previously noted, in the abstract of advantages of the heat-unit basis over the present ratings, that the latter are: (*a*) kilowatts per pound of coal; (*b*) kilowatts per cubic foot of gas; (*c*) kilowatts per gallon of oil. This is merely to inaugurate a method of stating such performance for electric plants as that which has been tried and found wanting for pumping plants. Neither do builders of engines and dynamos care to be held responsible for the performance of the heat-generating plant, whether it be a steam boiler or a gas producer.

The watt, the kilowatt, or the watt-hour basis is perfectly intelligible. The fuel record is on the most unsatisfactory and unreliable basis that could have been selected for such ratings. The kind of coal or other fuel is rarely stated. It is always a

---

* *Transactions* of the American Society of Mechanical Engineers, vol. xi., No. 381—"Report of Committee on a Standard Method of Conducting Duty Trials of Pumping Engines."

† *Transactions* of the American Society of Mechanical Engineers, vol. xv., No. 584—"Heat Units and Specifications for Pumping Engines," by A. F. Hall.

variable quantity. Even if noted, it enables one to form only a vague notion of what the economic rating should be with any other kind of fuel. Such records and ratings are not of permanent value. They are not given on a rational and scientific basis in conformity with the standards in electrical and other engineering work. It is proposed to substitute the heat-unit as the standard, about which there can be no dispute, unless it be as to the kind of heat-unit which should be chosen. This objection has been considered in a preceding section with regard to the merits of the British thermal unit and the calorie of the French standard.

(5) THE LOAD FACTOR IN POWER-PLANT RATINGS.

When the output of the plant is referred to, it is usually in terms of its load factor. Thus, for any one day's record of the performance of a good electric plant it would be at present expressed as, say, 200 watt-hours per pound of coal, with load factor of 40. From the very definition of this term "load factor" and the limitations placed upon it, it is apparent that the same factor may be obtained in quite a number of different ways. It is needless to point out that there will be a different coal bill for each and every set of conditions giving one and the same load factor.

This load factor expresses the rate of working. Professor Unwin* states the case very clearly thus: "There may be various load factors according to the precise fluctuation considered. But for the object at present in view, the consideration of the influence of variation of load on the efficiency of steam plant, the load factor may be taken to be the ratio of the area of a day's load curve to the area of a rectangle enclosing it. It is equally the ratio of the average load during the day to the maximum load at any time during the day."

Such a load factor, therefore, takes no consideration of the performance under a steady load, but mainly represents the result of the general average of all of the various fluctuations during any given time interval, as one day. For the purpose of this paper it cannot be considered as being at all equivalent to what is herein termed "the proportional part of the full load," under which condition all parts of the system may be consid-

---

* "On the Development and Transmission of Power from Central Stations," by W. C. Unwin, London, 1894.

ered as running under a constant load. It is the performance under the latter uniform condition which forms the basis for comparison of ratings by the British thermal unit standard.

(6) PROPOSED USE OF HEAT-UNITS IN ELECTRIC PLANTS.

It is proposed to state the performance of steam-power electric plants in kilowatts per 1,000,000 B. T. U. supplied to the steam used in the complete plant.

It is apparent that the same line of arguments, *pro* and *con*, is quite likely to arise as in the case of similar ratings for pumping plants. However, such a basis is equally adapted to meet the growing requirements for some standard in these latter types of steam-power plants.

In this case, moreover, it is possible to start upon a right basis from the beginning. The practice of rating the performance upon the watt-hours per pound of coal has not become so rooted that it cannot be changed to that now proposed. The necessity for such a standard in this case is none the less real, nor is its final adoption less probable on account of the radically different conditions under which these two types of power plants are regularly operated; namely, uniform loads in pumping plants and extreme and often rapidly varying loads in the electric plants.

As long as electricity continues to be generated by machinery driven by heat engines, as well as when it comes to be generated from coal direct, it is believed that there is no better standard than that already adopted in steam engineering. The unit of measure for the total heat put into the system—namely, the British thermal unit—is that upon which the output in kilowatts may be most satisfactorily based.

(7) DETERMINATION OF THE HEAT SUPPLIED TO THE STEAM.

The method of procedure, by which the quantity of heat supplied to the system is determined from the feed-water measurements, has been ably set forth in the report* of the Committee on Duty Trials of Pumping Engines. It is equally applicable to the case of the electric plant, and is as follows:

"Starting with a heat-unit basis of computing duty, it is pro-

---

* *Transactions* of the American Society of Mechanical Engineers, vol. xi., No. 381—"Report of Committee on a Standard Method of Conducting Duty Trials of Pumping Engines."

posed to make the computation from the quantity of heat supplied to the complete plant; using not only that supplied to the engine cylinders, but that supplied to all the necessary parts of the engine, such as the steam jackets, the donkey feed pump, the independent air pump, if this be driven with steam, and any other apparatus using steam which is necessary to the operation of the engine.

"In contract tests, if a steam pump be used for the boiler feed pump, the quantity of heat supplied for operating this apparatus is to be included in the total quantity, not only in cases where both boiler and engine are supplied by one party, but also where the boiler is furnished by a separate contractor. In this connection it should be added that if the engine contractor does not furnish the boiler feed pump, he should be permitted to specify, if he desires, the kind of feeding apparatus which shall be used during the test.

"The heat-unit method requires that the actual total heat of the steam shall be known, and for this purpose allowance will necessarily be made for any moisture or superheat contained by the steam furnished to the engine."

The method is further thus specified in Mr. A. F. Hall's paper, previously referred to:

"Each pound of water fed to the boiler is to be debited with the heat required to raise all of the water from the temperature it has at its entrance to the boiler to that corresponding to the boiler pressure, and the amount of heat required to convert 97 per cent. of the water into steam of boiler pressure from the temperature corresponding to this pressure."

This is allowing for 3 per cent. moisture. The amount of moisture in any case would be determined by calorimetric measurements of the quality of the steam supplied by the boiler to the engine, and similarly allowed for.

(8) PERFORMANCE OF THE BOILER NOT IN EVIDENCE.

This is the case for similar reasons to those which have ruled out the boiler performance in determining the duty of pumping plants. The steam-generating plant and the steam motive-power installation form two elements wholly distinct from each other. They may be, in some cases are, quite independent of each other.

The thermal value of the fuel used must be brought into the case if the performance of the plant is to be based upon the heat supplied to the boiler furnace. Such a coal basis is too uncertain, and is the least desirable one at present from which to determine the heat supplied.

The boiler plant is the only portion of the installation in which the human element has a hand in the economic performance.

It is most desirable to eliminate this as far as possible. Upon the skill of the fireman, or upon what may be called his personal equation, very much of the economy and efficiency of the boiler will depend. If mechanical stokers are used, even then the skill of the attendant is quite an important item.

However, at this stage of development, builders of engines and dynamos do not care to be responsible for the performance of the boiler plant, which is often furnished and installed by entirely different parties. They wish to know the "duty," as in the case of pumping engines, regardless of the boilers, or irrespective of how the steam is supplied, provided it is commercially dry.

(9) DETERMINATION OF THE WORK DONE BY THE ELECTRIC GENERATORS.

This reduces simply to voltmeter and ammeter readings at the switchboard. These are to be further corrected for any instrumental errors. The load during trial should be maintained as nearly constant as practicable. Latest forms of recording instruments make it quite possible to obtain accurate records throughout any specified period. The extreme simplicity and the high degree of accuracy attainable, in the case of the electric plant, should be strong points in favor of adopting such a standard rating as here proposed.

Direct-connected units in electric plants make this method as feasible and as practicable as in direct-acting pumping engines. It is of course possible, but quite improbable, that steam-power electric plants of any magnitude will be belt-driven in the future. The standard performance of such installation involves taking into account the small percentage of loss due to the slipping of the belt or rope drive. This must be stipulated in the specifications and allowed for in like manner to the percentage of slip in steam pumping-engine trials. The cases are not exactly analogous, but they may be similarly considered in the specifications and determined in the contract trial.

DISCUSSION.

Mr. Charles T. Porter.—This paper is a step in the right direction. The ultimate point to be reached is the rating of *all* steam engines upon the heat-unit standard. This is the mode of rating to which engineering is tending, and is obviously the only mode for which scientific accuracy can be claimed.

In this mode a heat account is kept with the engine. It is debited with the number of thermal units supplied to it and to pumps, etc., on its account, and is credited with the number converted into work. The ratio between these numbers expresses the value of the engine on the economic scale. The object of all engine tests should be to determine these numbers with accuracy.

All this is now so generally understood that we may expect that, so far as possible, experts will hereafter work on this line.

My object in discussing this paper is to present the point that, whatever the application of its power may be, the engine should, in the above account, be credited with the power shown by the indicator. In crank and flywheel engines the ratio which the engine is capable of maintaining between the number of thermal units received and the number accounted for on the diagram is the only variable to speak of, and presents the only point of interest.

In this class of engines, between those equally well made the power expended in overcoming the friction of the engine itself differs but little. It can always be known, having been shown by repeated experiments to be the power shown by the friction diagram, whatever amount of work the engine may be doing. The losses of power in the dynamos are also well established.

So it results, practically, that in fixing the terms of a guarantee, the economic value of the engine, determined in the method above indicated, is the only question to be considered.

Mr. William Kent.—This paper states that electric power plants should be contracted for on a basis similar to that in vogue for pumping plants. The plant consists of three principal portions, the boiler, the engine, and the dynamo; it also may have economizers, heaters, feed-pumps, and many other accessories. If a whole plant is to be guaranteed it certainly should include the boiler. If the author had said that the engine and dynamo part of the plant should be guaranteed on this basis, I should say the heat-unit standard may be all right. But I do not see why two rival contractors for the whole plant should be each asked to guarantee on this basis so many kilowatts developed from a certain number of thermal units unless they also are required to guarantee the economy of the boilers. The two men may put in equally good engines and dynamos while one may put in a better boiler plant than the other. I think the boiler should be included.

Prof. L. S. Randolph.—The writer agrees most heartily with Mr. Aldrich in regard to the method of rating steam and electric plants, but would like to see the principle carried further than the heat in the steam, and have the rating based on the heat-units in the coal. In the present condition of the coal calorimeter, however, it would be impossible to obtain results sufficiently concordant to warrant its use, and nothing else quite takes its place. Recent investigations on the coal calorimeter, however, seem to indicate that it may be possible to get satisfactory results from it, under which circumstances it would be perfectly feasible. The element of uncertainty introduced by the personal equation of the fireman, while objectionable from a purely scientific standpoint, becomes an essential element in the commercial consideration of the problem; and while it must be admitted that the proper covering of this point in a specification or test presents many difficulties, still these are not insurmountable, and as a reward we will get some of the improvements in boiler design and economy which have been obtained in steam-engine work. It seems to the writer that much of the blame for unsatisfactory results obtained can be laid more frequently at the door of defective boiler design and management than at anywhere else. How frequently we see elaborate engines supplied with steam by boilers entirely innocent of economizers, feed-water heaters, etc.; engine rooms fully equipped with indicators and cards taken regularly where there is no method of obtaining the water consumption! While there are, perhaps, too many difficulties in the way at the present time of our rating the economy of power plants on the basis of the heat-units in the coal, there is no reason why we should not at the present time make the rating, as the author suggests, on the basis of the heat-units in the steam. It seems to have everything to recommend it, and, as the author well says, should be done now, before some other less desirable unit is adopted.

I do not like Professor Aldrich's definition of the heat-unit. He says: "The British thermal unit now used, or the mechanical equivalent of the heat required to raise the temperature of one pound of water one degree from 62 degrees to 63 degrees Fahrenheit, is that of Professor Rowland's determination of 778 foot-pounds." The thermal unit is not the mechanical equivalent of heat. The heat-unit is the heat required to raise one pound of water one degree Fahrenheit, and is independent of Rowland's or any one else's determination of the mechanical equivalent. But there is a little difference of opinion at what temperature we should take the water in defining a heat unit, whether from 39 to 40 or from 62 to 63. I prefer the old definition, 39 to 40 degrees, but the difference between the two definitions is infinitesimal and of no practical importance in the question of rating an electric plant on the heat-unit basis. The question of the definition of the heat-unit was discussed in the discussion of Professor Peabody's paper some years ago (*Transactions*, vol. xiii., p. 351). But there is, however, another unit upon which we can all agree, which is the unit of evaporation, or the heat required to evaporate a pound of water from and at 212 degrees. This is 965.7 times the value of the heat unit by the old definition—that is, the heat required to raise one pound of water one degree Fahrenheit at the temperature of maximum density, or from 39 to 40. The value of the unit of evaporation is a "constant of nature" which does not depend upon the definition of the heat-unit.

In regard to the guarantees to be made on a complete electrical plant, since the testing of the plant includes three separate tests—viz.: that of the boiler, that of the engine, and that of the dynamo—I think that three separate guarantees should be given, each to be expressed in the usual commercial manner. The economical performance of the boiler should be guaranteed in terms of pounds of water evaporated from and at 212 degrees per pound combustible, the quality of the coal or its heating value being known, or it may be stated in terms of efficiency, or the quotient of the heat utilized by the boiler per pound of combustible divided by the heating value of one pound of combustible. The guarantee of the engine should be given in pounds of steam used per indicated horse-power per hour. That of the dynamo, if coupled direct to the engine, should be stated in efficiency, or the quotient of the electrical horse-power delivered divided by the indicated horse-power of the engine. For scientific comparisons these several efficiencies may be converted into terms of heat-units, but I do not think the heat-unit standard is desirable in commercial guarantees.

*Prof. William S. Aldrich.**—The extent and limitations of the heat-unit basis have been well stated by Mr. Porter in saying that the engine is to be debited with the heat supplied to it and to the pumps, etc., on its account, and to be credited with the heat converted into work. While this was outlined in Section 7, it is of sufficient importance to require a separate paper. As in the case of pumping plants, the contractor for the engine "should be permitted to specify, if he desires, the kind of feeding apparatus which shall be used during the test," and we might add the kind and type of condensing apparatus to be likewise used. Mr. Kent believes that the heat-unit standard may be all right, "if the author had said that the engine and dynamo part of the plant should be guaranteed on this basis."

The boiler performance may be included, if so desired, but the present inherent difficulties of the case are well stated by Professor Randolph. Builders and contractors will probably have much to say regarding this. So far boiler-makers prefer separate contracts and tests.

It is not quite clear why these separate contracts and tests should be made. Why should the performance of the engine and dynamo be separated when Mr. Kent proposes to have the dynamo guaranteed in terms of an efficiency based on the indicated horse-power of the engine? Is it desirable to so involve the performance of the engine when defining the efficiency of the dynamo? No doubt, the two should be jointly considered in contracts and tests, but we question the expediency of such an efficiency basis for the dynamo. Again, why should the indicated horse-power of the engine be involved at all in a quantitative manner? It is certainly eliminated in contracting and testing for the combined economic performance of engine and dynamo, whether rating such as proposed by Mr. Kent or

---

* Author's closure, under the Rules.

as noted in the paper. To make a contract and a test from the electrical output of dynamo to the indicated horse-power of engine, thence from the latter to the pounds of steam per indicated horse-power per hour, introduces the entirely unnecessary intermediate stage or step of the indicated horse-power of engine. Feed-water measurements per hour as to quantity and temperature will give the quantity of heat required to raise all of the feed-water from its temperature to that of the steam at the boiler pressure, and the kilowatts per hour at specified and maintained uniform loads on the dynamo will give the electrical output. Can anything more be settled by indicator-card measurements of the horse-power developed by the engine while tested? Sources of error are at once introduced, in instruments for speed and indicator measurements as well as in calculations therefrom, whenever the indicated horse-power is brought into evidence; and all of these are entirely unnecessary for heat-unit ratings for the purposes noted in the paper.

Of course, so long as heat and work are mutually convertible the performance of the motive-power machinery of the plant might be equally expressed, either as an efficiency ratio or as output in work units per input in heat units. Mr. Kent would advocate the efficiency ratio for the engine and dynamo equipment; but it is certain that the duty in foot-pounds (or other work units) per 1,000,000 heat-units supplied has recognized value in any consideration of economic performance.

The amount of heat required to raise one pound of water one degree at any given temperature is no doubt a perfectly definite quantity, but it certainly cannot be definitely determined with equal precision at any and every point of the thermometric scale. This amount of heat, when once determined, may be conveniently expressed in units of energy, and the theoretical C. G. S. unit of heat is one erg. According to the very latest and last determinations, the amount of heat required to raise a mass of water of one gramme from 9.5 degrees to 10.5 degrees of the scale of the hydrogen thermometer is equal to 42,000,000 ergs, or 4.2 joules or a "calory." The whole question is that of determining the quantity of heat required, and not of the kind of the units to be used. It would really seem best to determine the amount of heat required to raise a given mass of water one degree at such a temperature as that at which it is entirely possible to determine its equivalent in energy units.

DCCXXXIII.*

CURRENT PRACTICE IN ENGINE PROPORTIONS.

BY JOHN H. BARR, ITHACA, N. Y.
(Member of the Society.)

IN conjunction with Messrs. F. F. Gaines and H. E. Williams, the writer presented a paper at a former meeting of the Society, (December, 1895), entitled the "Proportions of High-Speed Engines." † The earlier paper explained our method of comparing practice and deriving general coefficients for use in formulas, but it gave only a few of these constants by way of illustration.

Since the presentation of the former paper a similar investigation has been made upon "low-speed" engine proportions, mainly of the Corliss type; and the original data, with some additions, have recently been revised.

The principal results are now presented, with several of the diagrams which it was thought might be of the most interest.

No elaborate argument in justification of the use of formulas for the purpose of designing will be offered in connection with this paper. The writer is well aware of the prejudice against such instruments in certain quarters, and he has himself the most profound respect for that sound engineering judgment which often properly outweighs computations. In explanation of the predominating idea underlying this work, a quotation is made from the introduction of the paper referred to above:

"It occurred to the writer, some two or three years ago, that it might be possible to derive formulas which would express, more or less closely, the general conclusions arrived at as the result of experience in engine construction. These formulas are necessarily empirical in the sense that they are adjusted to agree with observations; but they should be, whenever possible, rational in form. That is, the variables should enter the formulas as they would enter purely analytical formulas; while the

---

* Presented at the Hartford meeting (May, 1897) of the American Society of Mechanical Engineers, and forming part of Volume XVIII. of the *Transactions*.

† *Transactions* A. S. M. E., vol. xvii., p. 117, No. 670.

constants would be derived from practice, and not from assumed working strength, bearing pressures, etc. In other words, the engine in actual operation takes the place of the laboratory testing machine in supplying data for design.

"The advantages of using expressions of the rational form, rather than purely empirical formulas, are: first, that working stresses, factors of safety, etc., can be deduced from their constants, and that these constants can be intelligently modified to meet new conditions; second, that they can be applied with greater safety somewhat beyond the range of data from which they are obtained."

The original computations on high-speed engines were made by Messrs. Gaines and Williams in the preparation of their graduating thesis in 1895. The work on low-speed engines was done by Messrs. L. J. Gray and W. S. Goll, and was presented by them as a thesis upon graduation from Sibley College, Cornell University, in 1896. Mr. T. A. Bennett of the present senior class, in the same institution, has assisted in putting the data into the shape which they now assume. The writer desires to acknowledge his obligations to these gentlemen for their painstaking efforts, and to express especially his great appreciation of the liberality with which many prominent engine-builders responded to the request for data.

METHOD OF PROCEDURE.

A printed form with spaces for insertion of over fifty items relating to the proportions of parts of engines was prepared and sent to various leading engine-builders, many of whom filled in the required data relating to from three to sixteen different sizes of engines. The entire collection of material covers, more or less completely, nearly 200 engines, ranging from 20 to 725 horse-power. The information thus obtained was classified for comparison. Thus, for example, in dealing with crank-pin and main journal dimensions, the centre-crank engines cannot be properly compared with side-crank engines, while the piston rods of such engines may be classed together, at least if the rotative speeds are not too widely divergent.

The following notation is used throughout this paper:

D = diameter of piston; A = area of piston; L = length of stroke; S = steam pressure, taken at 100 pounds per square inch above exhaust, as a standard pressure; H.-P. = rated horse-power; N = revolutions per minute; C = a constant. All dimensions in inches, unless stated to the contrary. Other notation is explained as used.

The general method employed in deriving the various expressions may be illustrated by reference to that used for the diameter of the crank shaft at the main bearings. (See Fig. 235.)

Crank Shaft.—d = diameter of shaft. The formula for the diameter of a shaft which is subjected to torsion is

$d = C\sqrt[3]{\text{H.-P.} \div N}$, if the moment of torsion is constant.

Crank shafts are subject to variable combined bending and twisting moments; but these moments, when their magnitude and variation are known, can be reduced to an equivalent twisting moment; hence an expression of the above form applies to the case in hand, if the ratios between bending to twisting moments and between maximum and mean moments are constant. These ratios should not affect the form of the above expression, but only the value of the numerical coefficient. In the engines examined, there is a general agreement as to the above ratios of moments among the engines of the same class. Of course this agreement is by no means mathematically exact; but the constants given in this paper are only intended to show the general trend of practice, and the diagrams exhibit the uniformity, or lack of uniformity, among the various builders as to certain proportions.

From the data at hand, points were plotted on cross-section paper with given values of d as ordinates, and the corresponding values of $\sqrt[3]{\text{H.-P.} \div N}$ as abscissas. Points located in this way are indicated by small circles in Fig. 235, and if two points, derived from different engines, coincide, a double circle is used. All points obtained from the engines of one maker are connected by a conventional line. The broken character of some of the lines representing the dimensions of a single builder may be accounted for in part by the use of common fractions of an inch and by the frequent practice of using the same frame, crank shaft, etc., with different cylinders.

The heavy full line is drawn to represent the average of the observations, and lines are also drawn to embrace the extreme points. From the equations of these lines formulas are derived which represent the average and extremes of practice, as shown by the engines examined. The three formulas thus obtained differ only in the values of the constants.

The following results are derived from about eighty separate engines classed as high-speed engines, and about eighty-five engines classed as low-speed engines. Those in the former class range from 20 to 240 horse-power, and they represent the practice of thirteen different builders. Those in the second class range from 45 to 740 horse-power, and they represent twelve different builders. Some of the data received could not, for various reasons, be used to advantage in our work. In some instances the number of engines considered was necessarily less than the above, but very few of the following coefficients are derived from less than fifty separate engines.

All of the engines from which these coefficients were derived are commercial forms which have been subjected to years of service; therefore it is probable that dimensions somewhat smaller than those corresponding to the mean values of the various constants would secure reasonable safety under ordinary conditions. Commercial or engineering advantages may warrant the use of larger members in many cases.

The data used are all from simple engines, but it is believed that many of the results may be applied to compound engines by modifying them to comply with well-known relations.

THE CYLINDER.

Data on thickness of cylinder walls (shell), flanges, cylinder heads, and cylinder head bolts were obtained only for the engines classed as low-speed.*

Thickness of Walls (Fig. 228).—The shell of the cylinder must have sufficient thickness to resist the maximum bursting action and to avoid objectionable deformation, even after the cylinder has been rebored one or more times; and in small cylinders, for moderate pressures, the thickness necessary to insure good castings may be the prime requirement. Such considerations have led to the proposal of empirical formulas in which the steam pressure does not appear. While the use of this class of formulas is not in strict accord with a leading idea of the work here described, it has seemed well to adopt such an expression in this instance.

---

* Engines classed as "low-speed" are Corliss or other long-stroke engines usually making not more than 100 or 125 revolutions per minute. Those classed as "high-speed" engines have, generally, a stroke of from one to one and a half diameters, with a prevailing rotative speed of 200 to 300 revolutions per minute.

The general form of the expression that is very often employed:

$$t = CD + B,$$

in which t = the thickness of the shell in inches, D = the diameter of the piston in inches, and C and B are the constants. From the engines specified above (see Fig. 228) it is found that C varies from .04 to .06, and that B = .3 inch.

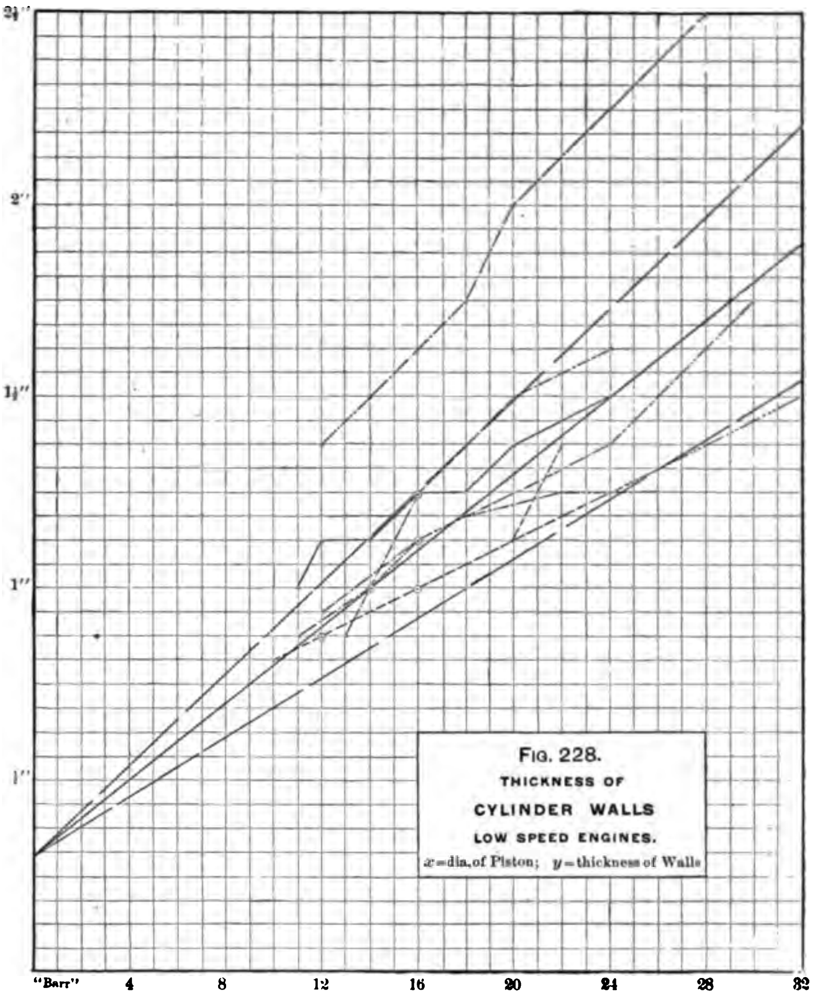

FIG. 228.
THICKNESS OF
CYLINDER WALLS
LOW SPEED ENGINES.
x=dia. of Piston; y=thickness of Walls

The general practice is expressed approximately by

$$t = .05D + .3 \text{ inch.}$$

It seems not unreasonable to look upon the added constant of 0.3 inch, found above, as an allowance for reboring, etc., and the coefficient C as one which should vary with the steam pressure. The engines considered in deriving the values given are all rated on from 80 to 100 pounds pressure; hence, in using this formula for higher pressures it would seem advisable to increase the value of C proportionally. Looked at from this standpoint, the above formula becomes a rational one.

Flanges and Cylinder Heads.—The flanges and the cylinder heads usually have the same general thickness. This is found to vary from 1.0 to 1.5 times the thickness of the shell, the mean value being about 1.2 times the thickness of the cylinder wall.

Cylinder Head Studs.—There is no general agreement as to the number of studs nor their diameters. In the above-specified low-speed engines none have studs less than ¾ inch or more than 1⅜ inches diameter. The least number of bolts is 8 for a cylinder 10 inches diameter, and the greatest number is 32 for a cylinder 24 inches diameter.

A large number of small bolts, as against a small number of large bolts, tends to secure tightness of the joint; but the smaller bolts are subjected to greater stress in screwing up. It may be mentioned in this connection that experiments, made under the direction of the writer, show that the stress at the bottom of the thread, due to screwing up a bolt, may equal or exceed $\frac{30,000}{d}$ pounds per square inch, in which $d =$ the nominal diameter of the bolt.

The average number of bolts used in each head of the above engines is given approximately by

$$n = .7D,$$

in which $n =$ number of bolts, and $D =$ diameter of piston in inches. Of course the number given by this rule would usually be modified to secure an even number.

The general practice as to diameter of studs is represented nearly by

$$d = \frac{D}{40} + \frac{1}{2} \text{ inch},$$

d being the nominal diameter of the studs.

PORTS AND PIPES.

Areas of Ports and Pipes.—

Area of port (or pipe) $= a$, in square inches.
Area of piston $= A$, in square inches.
Mean piston speed $= V$, in feet per minute.

The relation of port area (or pipe area) to area of piston and mean piston velocity is expressed by

$$a = \frac{AV}{C},$$

in which C is the mean velocity of steam through the port, or pipe, in feet per minute.

Ports—High-Speed Engines.—(The same ports used for steam and exhaust.)

For the general practice it is found that

Mean value of $C = 5{,}500$.
Maximum value of $C = 6{,}500$.
Minimum value of $C = 4{,}500$.

As the piston speed is quite constant for a large number of these engines (about 600 feet per minute), the area of port may be conveniently expressed by

$$a = KA,$$

in which K is as follows for the general practice:

Mean value of $K = .11$.
Maximum value of $K = .13$.
Minimum value of $K = .09$.

Area of Steam Ports—Low-Speed Engines.—(Separate ports for exhaust.)

For these engines it is found that the general practice is represented by

Mean value of $C = 6{,}800$.
Maximum value of $C = 9{,}000$.
Minimum value of $C = 5{,}000$.

In the relation $a = KA$, K varies for the general practice with these engines as follows:

Mean value of $K = .09$.
Maximum value of $K = .10$.
Minimum value of $K = .08$.

Exhaust Ports—Low-Speed Engines.—With the same forms of expressions as above, designating area of the exhaust port by a, it is found that

Mean value of $C = 5{,}500$.
Maximum value of $C = 7{,}000$.
Minimum value of $C = 4{,}000$.

Mean value of $K = .11 = \frac{1}{9}$.
Maximum value of $K = .125 = \frac{1}{8}$.
Minimum value of $K = .10 = \frac{1}{10}$.

Steam Pipes—High-Speed Engines.—In the expression $a = \frac{AV}{C}$.

Mean value of $C = 6{,}500$.
Maximum value of $C = 7{,}000$.
Minimum value of $C = 5{,}800$.

As the piston speed is approximately the same in many of the cases, it is convenient to use the relation

$$d = KD.$$

It is found that

Mean value of $K = .30$.
Maximum value of $K = .32$.
Minimum value of $K = .29$.

Steam Pipes—Low-Speed Engines.—With these engines it is found that

Mean value of $C = 6{,}000$.
Maximum value of $C = 8{,}000$.
Minimum value of $C = 5{,}000$.

Mean value of $K = .32$.
Maximum value of $K = .35$.
Minimum value of $K = .27$.

Exhaust Pipes—High-Speed Engines.—

Mean value of $C = 4{,}400$.
Maximum value of $C = 5{,}500$.
Minimum value of $C = 2{,}500$.

Mean value of $K = .37$.
Maximum value of $K = .50$.
Minimum value of $K = .33$.

Exhaust Pipes—Low-Speed Engines.—

Mean value of $C = 3{,}800$.
Maximum value of $C = 4{,}700$.
Minimum value of $C = 2{,}800$.

Mean value of $K = .40$.
Maximum value of $K = .45$.
Minimum value of $K = .35$.

FACE OF PISTONS.

It is not to be expected that any very general agreement will be found in the practice of various builders as to the face, or width, of pistons.

[*] The following expression, in which F = face of piston, was employed to express the relation of face of piston to diameter of piston:

$$F = CD.$$

High-Speed Engines.—

Mean value of $C = .46$.
Maximum value of $C = .60$.
Minimum value of $C = .30$.

Low-Speed Engines.—

Mean value of $C = .32$.
Maximum value of $C = .45$.
Minimum value of $C = .25$.

No data were obtained on the thickness of piston walls.

PISTON RODS.

There are several methods of treating this member analytically, any of which might be taken as the basis of a formula in deriving constants by the general method used in this investigation.

It has seemed best to treat it as a long strut, to be designed for rigidity, inasmuch as any considerable buckling or flexure of the rod would induce objectionable friction and wear at the stuffing box, or possibly cramping of the piston. The Euler formula has been followed. It has the form

$$P = K'\frac{EI}{L_1^2}\ ;\ P = K\pi^2\frac{EI}{L_1^2},$$

in which E = the modulus of elasticity; I = moment of inertia for the section; L_1 = the length of the strut; and P = the greatest load consistent with stability. The value of the constant K depends upon the end conditions; that is, upon whether the ends of the strut are "fixed" or pivoted, free or guided. The piston rod is considered as coming under the case in which the strut is fixed at one end and *free* at the other. It may be

---

[*] Only horizontal engines are included in deriving the following coefficients.

DCCXXXIV.*

DIAGRAMS FOR RELATIVE STRENGTH OF GEAR TEETH.

BY FORREST R. JONES, MADISON, WIS.
(Member of the Society.)

THE following diagrams were constructed with a view to facilitating the determining of the sizes and pitches of gears which are suitable to withstand a known or assumed pressure transmitted to them by an intermeshing gear. Since the conditions affecting the magnitude of the force which can be safely applied to a gear by its mate are so numerous and variable, no attempt has been made to take them into account in the diagrams, this being considered a function of the designer. The principal quantities thus left out of the diagrams are: speed of gear; inaccuracy of alignment and of tooth forms, both tending to localize the pressure against the tooth over a small area of the working surface; the presence of foreign substances between the teeth; liability to shocks; and the number of teeth in working contact.

The assumption is made, for convenience of calculation, that the pressure is applied to the tooth at its top, uniformly distributed across the width of the gear face, and normal to the radial plane of the gear which passes through the centre of the tooth. The relative values of the force so applied, the pitch, and the maximum fibre stress induced, are given in the diagrams.

At the risk of getting the cart before the horse, the methods of using the diagrams will first be illustrated by a few examples, in order to show their purpose; then the method of determining the curves, and, briefly, the effect of contact between more than one pair of teeth at the same instant, upon the values given in the diagrams.

---

* Presented at the Hartford meeting (May, 1897) of the American Society of Mechanical Engineers, and forming part of Volume XVIII. of the *Transactions.*

Figs. 241 and 242 are for gears having a face one inch wide, Fig. 241 being for the smaller pitches, from about .25 of an inch up to about 2 inches, and Fig. 242 for pitches from 2 inches up to a little more than 6 inches. Figs. 241 and 242 can readily be used for gears having any width of face expressed in inches.

Figs. 243 and 244 are for gears having a face width equal to the circular pitch of the teeth, and can be used for gears in which the face width bears any given ratio to the circular pitch. The same ranges of pitch are covered in Figs. 243 and 244 as in Figs. 241 and 242, respectively.

Let it be required to find the pitch of a gear 18 inches in diameter, 4 inches face, working at 4,000 pounds maximum stress in the material, to withstand 2,000 pounds pressure at its point. This gives a pressure of 2,000 ÷ 4 = 500 pounds per inch of width of face. In Fig. 241, on the right-hand scale, marked "pounds pressure at tooth point," find the 500 pound line and follow it to its intersection with the 4,000 pound fibre stress line ; from this point drop down to the curve marked "18 inches diameter," and thence to the scale on the left of the diagram, thus obtaining a reading of 2.25 diametral pitch, or about 1.4 inches circular pitch.

Again, suppose a pressure of 4,550 pounds is to act on a gear of 8 inches pitch diameter and 7 inches face, the limit of fibre stress being 6,000 pounds per square inch. The pressure per inch of width in this case is 4,550 ÷ 7 = 650 pounds. By the same method as before, following the 650 pounds pressure line to its intersection with the 6,000 pounds fibre stress line, and thence toward the bottom of the diagram, it is found that the vertical line does not cut the 8 inches diameter line, but falls to the right of it, the latter terminating at 1.5 diametral pitch, this being the greatest pitch which can be used when the number of teeth is not less than twelve, which is the lower limit in the diagrams. The fact that the vertical and diameter lines do not intersect shows that no gear having twelve teeth or more can be designed to fulfil the conditions given. With a fibre stress slightly greater than 6,000 pounds per square inch, however, a gear of 1.5 diametral pitch will answer.

It can doubtless be readily seen that if, of the four factors —pitch diameter of gear, width of face, pitch, and fibre stress— three are given, the other can be determined by the aid of the diagrams.

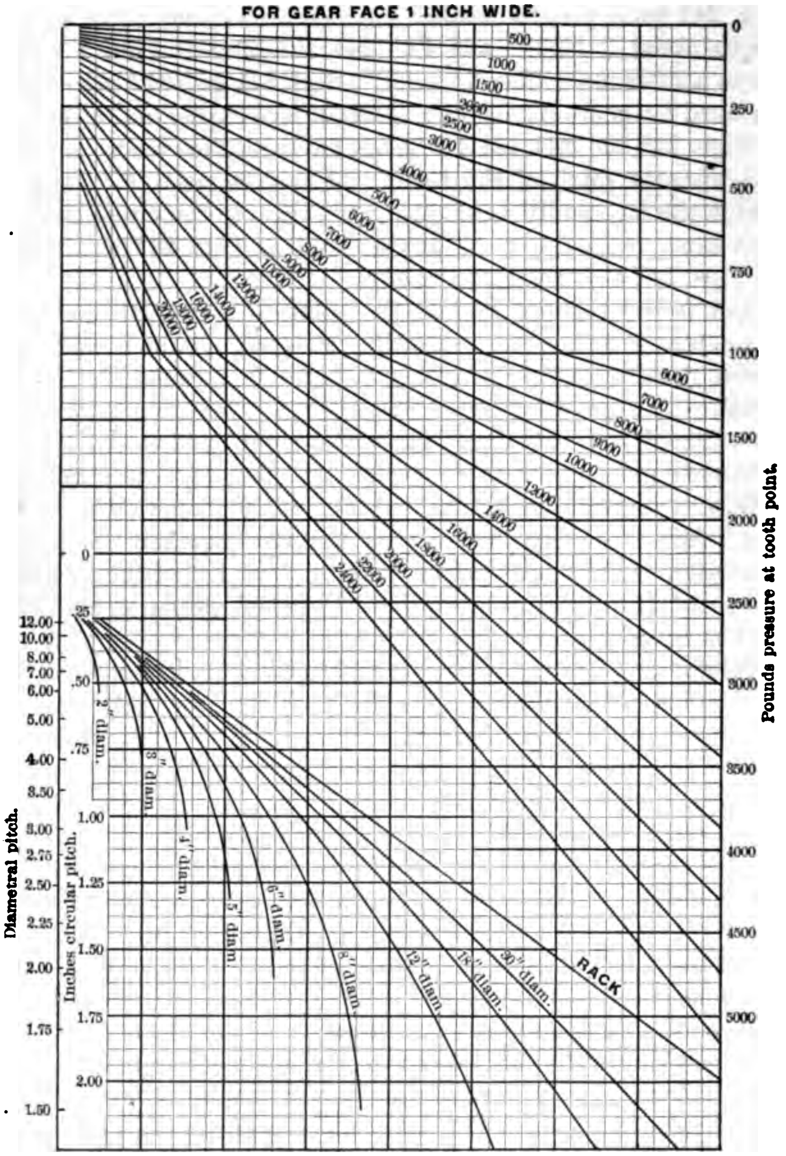

Diagram showing relation between pressure at tooth point, stress in outer fibre, and pitch of a gear tooth. Figures in diagram above "RACK" indicate fibre stress—those below, diameter of gear.

FIG. 241.

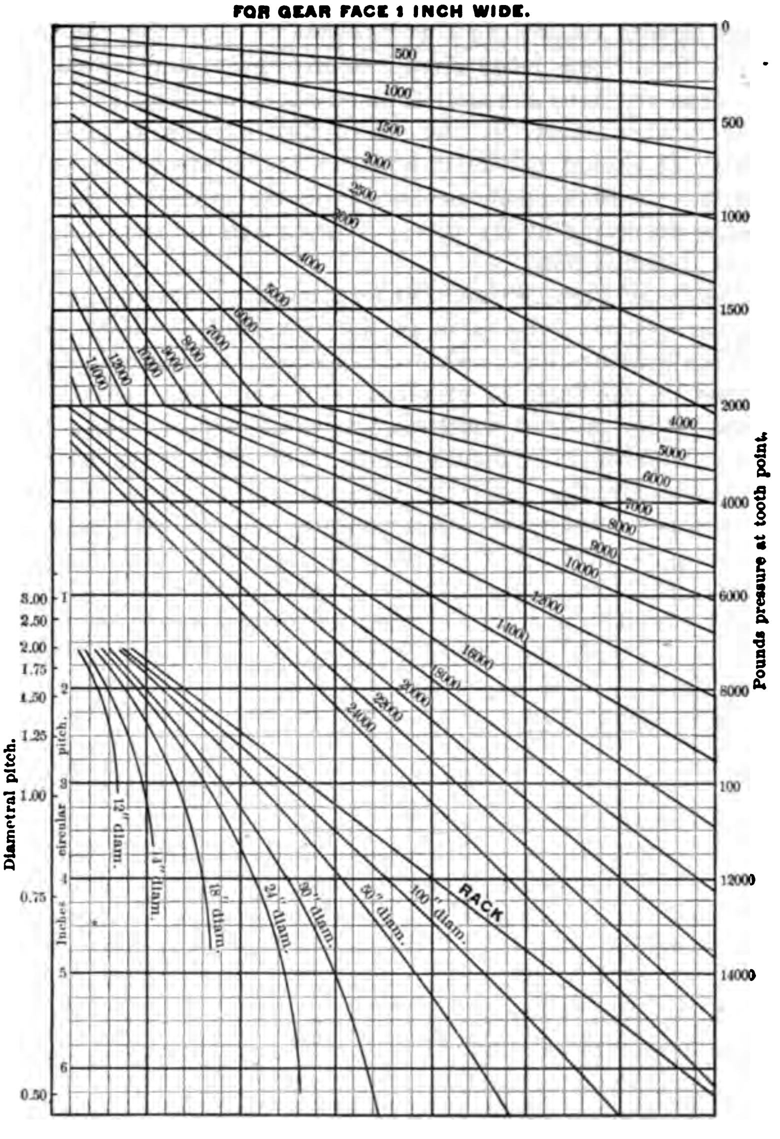

Diagram showing relation between pressure at tooth point, stress in outer fibre, and pitch of a gear tooth. Figures in diagram above "RACK" indicate fibre stress—those below, diameter of gear.

Fig. 242.

The change of direction of the fibre stress lines at the 1,000 pounds pressure line in Fig. 241, and the similar changes in the other figures, require no consideration in their use, the break in the lines being made simply to give their intersections with the pressure lines as much distinctness as possible, and, at the same time, to keep the length of the diagram conveniently small. It should be noted, however, that a change of pounds per inch is thus made necessary on the pressure scale, the change occurring at the pressure line where the angle is made in the diagonal lines.

The use of Figs. 243 and 244 for a width of face equal to the circular pitch, is the same as the preceding example, except that the pressure for a width of face equal to the circular pitch is read on the scale of pressures at tooth point, instead of the pressure per inch of width as was done before. Thus, for a gear 30 inches in diameter, whose face width is to be three times the circular pitch, to work at a fibre stress of 14,000 pounds per square inch, under a pressure of 90,000 pounds at the tooth point, we have 90,000 ÷ 3 = 30,000 pounds pressure on a width of face equal to the circular pitch. Following the 30,000 pounds line from the right-hand side of Fig. 244 to its intersection with the 14,000 pounds diagonal line, and thence to the 30 inches diameter curve, gives 5.75 inches circular pitch, which is something less than .5 diametral pitch.

The method of determining the necessary data for plotting the curves was as follows: The outline of a tooth of .5 diametral pitch was carefully developed by the use of a rolling circle having a diameter equal to the radius of a 15-toothed gear of the same pitch. Points on the curve were located by drawing the describing circle on the matted side of a thin sheet of translucent celluloid, and rolling the circle over the points of fine cambric needles as described in the *Sibley Journal of Engineering*, vol. ix, No. 4, this being considered the most accurate as well as the most rapid method which could be used on paper. The bottom of the curve was then filleted to a radius equal to one-sixth of the space between the teeth at the addendum circle, in accordance with the method of the Brown & Sharpe Mfg. Co., as given in their *Practical Treatise on Gearing*. This gave a curve practically the same as the one used by them.

After both sides of the tooth were drawn, a section of the tooth, for a gear face one inch wide, was taken at what was

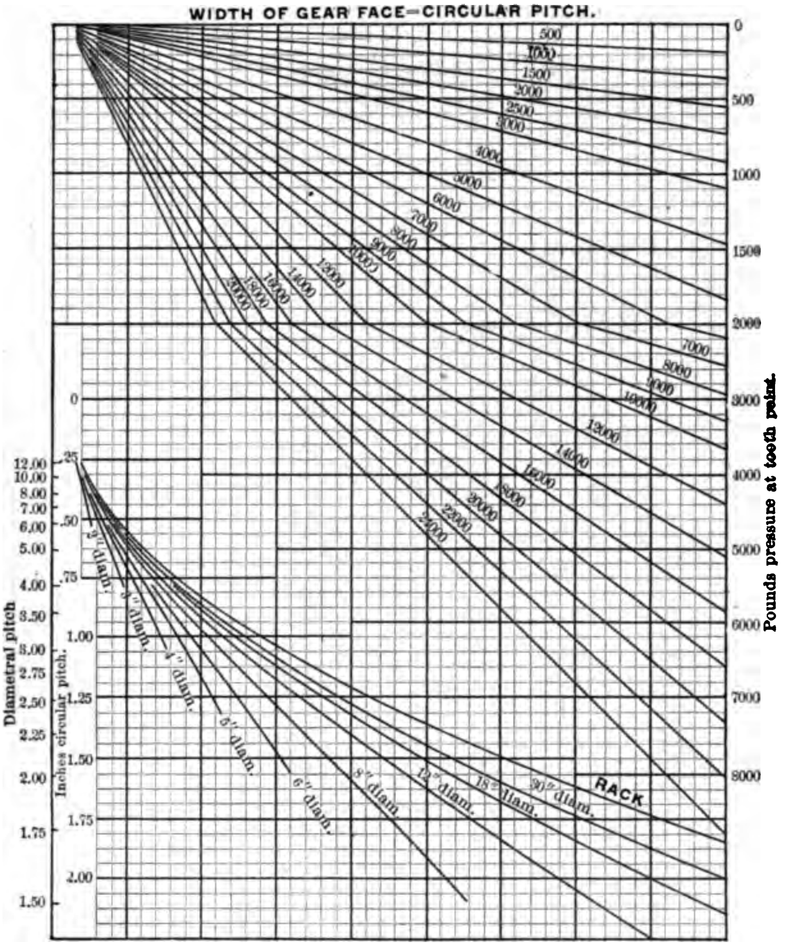

Diagram showing relation between pressure at tooth point, stress in outer fibre, and pitch of a gear tooth. Figures in diagram above "RACK" indicate fibre stress—those below, diameter of gear.

FIG. 243.

thought to be the part where fracture would occur, the plane of the section being normal to the radial plane of the centre of the tooth, and the force, normal to the radial plane, necessary to produce a certain stress in the outermost fibre, which was taken at 6,000 pounds per square inch for convenience, calculated by the common formula for cantilevers of rectangular cross-section, which is

$$P = \frac{tbh^2}{6l} \quad . \quad . \quad . \quad . \quad . \quad . \quad . \quad . \quad (1)$$

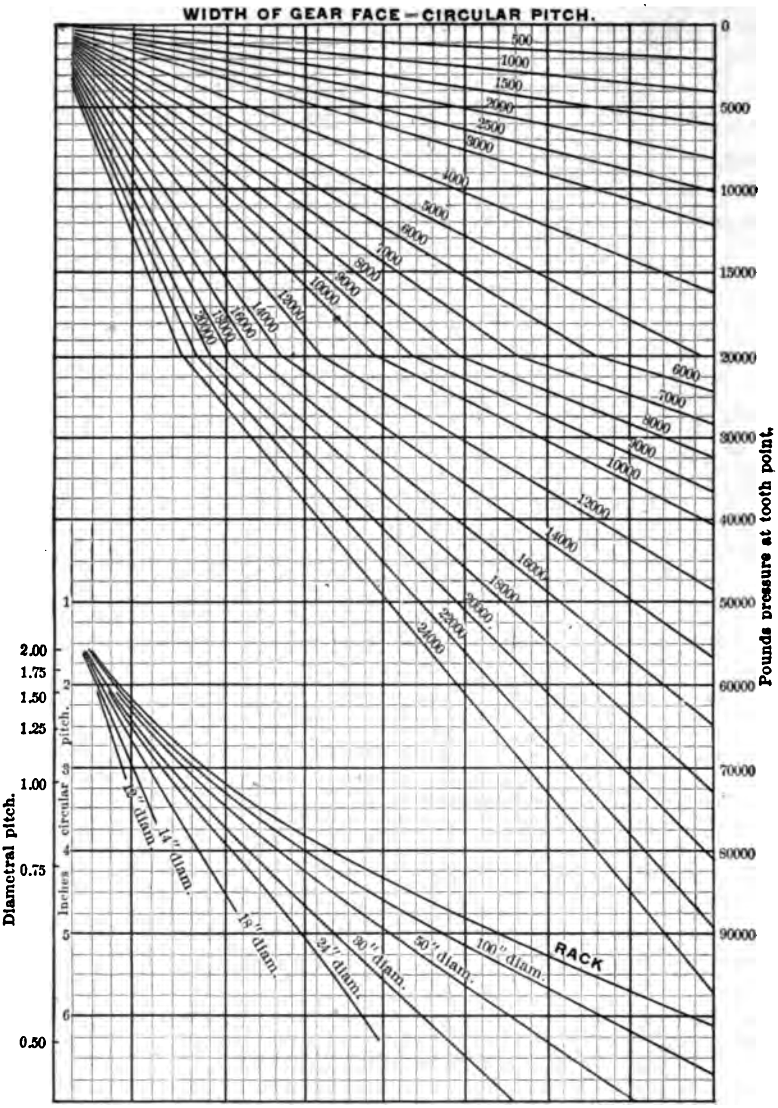

Diagram showing relation between pressure at tooth point, stress in outer fibre, and pitch of a gear tooth. Figures in diagram above "RACK" indicate fibre stress—those below, diameter of gear.

FIG. 244.

in which, for this case,

P = pressure applied at tooth point.

t = stress in outermost fibre.

b = width of gear face.

h = thickness of tooth at section chosen.

l = distance from top of tooth to the section.

Other sections were then taken parallel to the first and at a distance from each other of .1 of an inch, until a series of values of P were obtained having the smaller values at the centre of the series. By this means the value of P necessary to produce the assumed fibre stress in the weakest section, was obtained with considerable accuracy. The result is obtained in this way with fully as much accuracy and much more rapidly than by drawing the maximum inscribed parabola whose vertex is at the top of the tooth and on the radial line through the centre of the tooth, and then calculating the strength of a tooth of one inch width with the parabolic outline thus obtained, which strength is that of the tooth.

The value of P was determined in the same way as for the first gear, for 14 gears of the same pitch and width of face, varying from 12 teeth to a rack, the number of teeth being selected so as to increase P as nearly as possible by equal increments from its value for 12 teeth up to that for a rack. By plotting the values of P thus obtained, the curve of Fig. 245 was determined. The value of P for a rack could not be used in this curve, of course, because the number of teeth is infinite. The value of P for a rack is not much greater than that for a 300-toothed gear, however, being 4,080 pounds for the rack.

By the aid of this curve and making use of the fact that when the number of teeth and the width of a gear remain constant, the strength of the teeth varies as the circular pitch, the curves of Figs. 241 and 242 were laid out. And by taking into account the property that when the number of teeth is constant, and the width of face bears a constant ratio to the circular pitch, the strength varies as the square of the pitch, the curves of Figs. 243 and 244 were determined.

In calculating the maximum fibre stress in the material of the gear by equation (1), no account, of course, was taken of the shearing stress. By actual calculation this was found to have more effect in the rack tooth than any other when introduced into the following formula for combined flexure and shear.

$$\text{Maximum tension} = \frac{t}{2} + \sqrt{v^2 + \frac{t^2}{4}} \quad . \; . \; . \; . \; . \quad (2)$$

in which v is the shearing stress per unit area, and t is the same as in equation (1). Formula (2) gave a maximum tensile stress less than four per cent. greater than that when flexure only was considered, shear being neglected. On account of this comparatively small effect, when considered in connection with the uncertain elements which enter into any attempt at calculating the strength of gear teeth, it was not deemed worth while to introduce it into the diagrams.

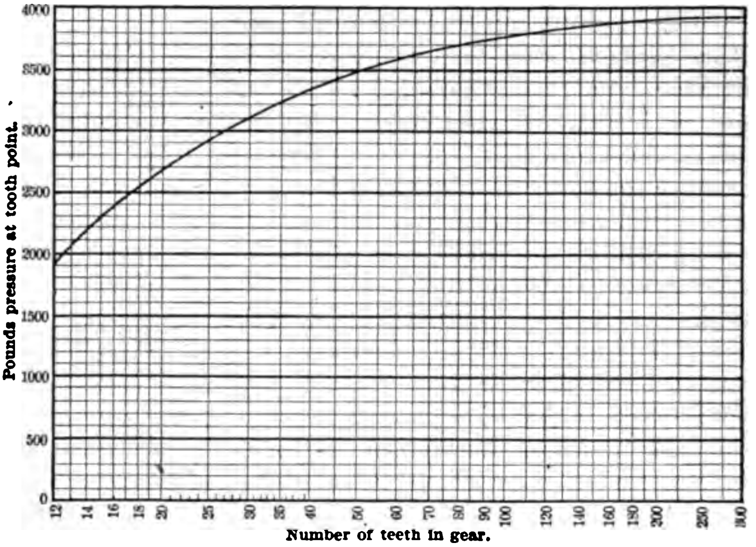

Diagram showing the pressure at the point of a single tooth in a gear of ½ diametral (=6.28 inches circular) pitch and 1 inch face, which will produce a fibre stress of 6000 pounds per square inch in the material of the gear.

FIG. 245.

The maximum shear, according to the formula for combined shear and flexure,

$$\text{Maximum shear} = \sqrt{v^2 + \frac{t^2}{4}} \quad . \; . \; . \; . \; . \quad (3)$$

is about 54 per cent. of the maximum tension.

With regard to the effect of the position of the line of contact between a pair of engaging gears, it was found by construction that, in a pair of perfectly made and aligned gears having 13 teeth each, at the instant contact changes from one to two pairs of teeth, or *vice versa*, which is the time when the greatest stress is brought upon the material of the tooth, the pressure is applied at such a distance outside of the pitch line of the tooth subject to the greater bending moment, as to allow an increase of pressure of more than 70 per cent. of that which could be applied at the top of the tooth. With a greater number of teeth in either or both gears, a greater increase is allowable.

Examples of gear teeth broken in actual service are not readily found in connection with such data of speed and power transmitted as are necessary for finding the fibre stress by the diagrams or any other method. The results of tests on cast iron gears, given in Brown & Sharpe's *Practical Treatise on Gearing* are given below, together with some added data, namely: circular pitch, pitch diameter, speed at pitch circle, and stress in outer fibre.

Diametral pitch.	Circular pitch. Inches.	Width of face. Inches.	Number of teeth.	Pitch diam. Inches.	Revolutions per min.	Veloc. at pitch cir. Ft. per min.	Observed breaking pressure at pitch circle. Pounds.	Stress in outer fibre. Pounds per sq. inch.
10	.3142	$1\frac{1}{16}$	110	11	27	78	1,060	33,000
8	.3927	$1\frac{1}{4}$	72	9	40	94	1,460	29,000
6	.5236	$1\frac{9}{16}$	72	12	27	85	2,220	24,000
5	.6283	$1\frac{7}{8}$	90	8	18	85	2,470	20,500

The fibre stresses higher than 24,000 pounds given in the table were obtained by temporarily constructing diagonal lines for higher stresses than given in the diagrams. In determining the values of the fibre stresses given in the table, it was assumed that the turning force at the pitch line acted at the point of the tooth. While this is undoubtedly not true, and gives a fibre stress not near the actual amount, it still serves as a guide for designing gears of similar dimensions. If it is possible to obtain similar data for larger gears of cast iron, an idea of the working strength for the range of pitch covered can be obtained. For steel and other strong metals, the fibre stress would, of course, be taken much higher.

The diagrams are presented with the hope that they may be of some service. There is no desire on the part of the writer to discuss how near or how far away from the truth the assumptions made for determining them may be, for the values and conditions assumed are introduced into the diagrams so that they can readily be modified to suit the designer.

DISCUSSION.

Prof. John H. Barr.—Mr. Wilfred Lewis, member of the Society, published a formula in 1893 which is believed to have been the first to consider the influence of the number of teeth in a gear upon the strength of the teeth.* Mr. Henry Hess recently gave, in the *American Machinist*, a diagram based upon the Lewis formula, and he, like Mr. Lewis, makes the load per tooth depend upon the face of the gear, the fibre stress, the pitch, and the number of teeth. For most cases in design it would appear preferable that the *diameter* of the gear enter the expression, or diagram, in place of either the pitch or the number of teeth.

While engaged in an attempt to put the results of Mr. Lewis's investigation in such form that the diameter of the gear would appear instead of the number of teeth, the paper of Professor Jones, which embodies this feature, was received. It seemed appropriate to submit a brief statement of some of the results of my examination of the subject as a discussion on the present paper.

In the first place, Fig. 245 of Professor Jones's paper was replotted to a natural scale, when it was observed that the curve became an equilateral hyperbola (or at least a close approximation to one). From the equation of this hyperbola Mr. Jones's results can be put into a form similar to the one given by Mr. Lewis, except as to the value of the constants. Let W = the load per tooth in pounds; C = the circular pitch in inches; F = the face of the gear in inches; S = the fibre stress in pounds per square inch; N = the number of teeth in the gear.

$$\text{Then } W = CFS\left(0.124 - \frac{0.888}{N}\right), \text{ according to Lewis;}$$

$$\text{and } W = CFS\left(0.106 - \frac{0.678}{N}\right), \text{ according to Jones.}$$

The latter is probably not exact, as it is derived from Fig. 245 of the present paper, the scale of which is too small for great accuracy. To compare these two expressions let

$W = CFSX'$ for Mr. Lewis's work;

$W = CFSX''$ for Mr. Jones's work.

---

* *Proceedings* Engineers' Club of Philadelphia, vol. x., No. 1, January, 1893.

The following table shows the values of X' and X'' for several numbers of teeth, and the comparative strengths of the corresponding gears as given by the respective expressions.

N.	X' (LEWIS).	X'' (JONES).	DIFFERENCE.
10	0.0352	0.0382	8 per ct.
12	0.0500	0.0495	1 "
15	0.0648	0.0608	6 "
20	0.0796	0.0721	10 "
30	0.0944	0.0834	13 "
60	0.1093	0.0947	15 "
100	0.1152	0.0992	16 "
Rack	0.124	0.106	17 "

The accompanying diagram (Fig. 246) is one which has been derived from the Lewis formula by substituting $\left(\frac{ND}{C}\right)$ for the N of the original expression. The pitch curves are drawn for

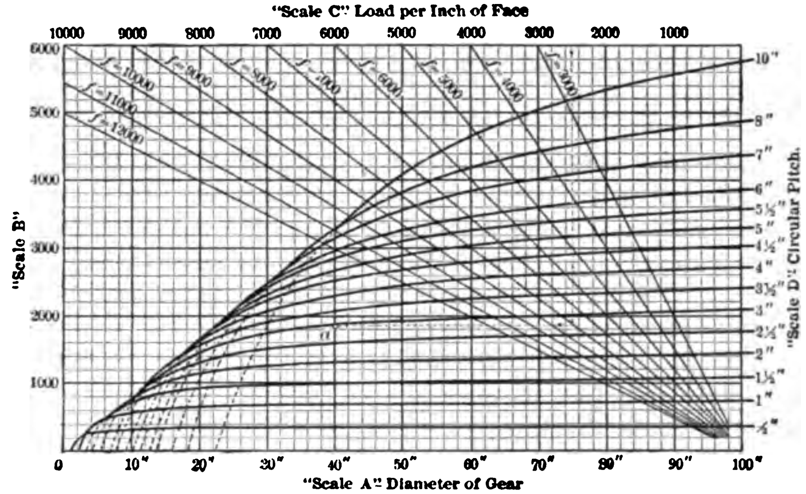

Barr

DIAGRAM FOR GEAR TOOTH DESIGN.

FIG. 246.

some one stress, as 6,000 in the diagram shown; ordinates are loads per inch of tooth face; abscissas give diameters of the gears. To provide readily for the use of this diagram with stresses other than 6,000, the stress diagonals (radiating from the lower right-hand corner) are drawn, and the load scale is reproduced on the upper horizontal line. The use of the diagram is illustrated by this problem : A gear of 40 inches diameter is to sustain a load of 2,500 per inch of face with a stress of 8,000 pounds per square inch. Take 2,500 on Scale *C*, drop vertically to the diagonal marked $S = 8{,}000$; then pass horizontally to the vertical through the point marked 40 inches on Scale *A* ; this last intersection shows that the pitch should be nearly 3 inches. The gears should then have 42 teeth to meet the requirements given.

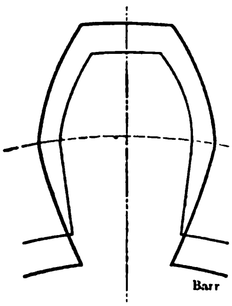

FIG. 247.

The diagram indicates that for gears less than 15 inches in diameter a tooth of 4 inches pitch is weaker than one of 3 inches pitch ; this is, of course, owing to the larger number of teeth, and consequently stronger form of teeth, with the smaller pitch. Fig. 247 shows a similar condition for two teeth drawn upon a pitch circle which gives radial flanks for the smaller pitch, and converging (under-cut) flanks for the larger pitch.

The Lewis expression may be reduced to the following form, which is convenient for designing gears when the pitch diameter is fixed. $C = (0.22 - \sqrt{\left(0.049 - \frac{3.57\,W}{DS}\right)}\,D$, in which W' is the load per inch of face per tooth, D is the pitch diameter, and *S* is the stress, and *C* is the circular pitch, as before.

An easily remembered relation, deduced from Mr. Lewis's investigation, is as follows : The *load per tooth on a 36-tooth gear* (strictly, 37 teeth) *equals one-tenth the face in inches multiplied by the stress in pounds per square inch and the circular pitch in inches.* A 12-tooth pinion will carry one-half, and a rack will carry one and one-fourth the above load. Or, reducing the number of teeth to about one-third of 36 reduces the load by one-half, while increasing the number of teeth to infinity increases the strength by one-fourth.

A somewhat curious relation is noticed from inspection of the diagram (Fig. 246), viz. : that there is a common tangent, through the origin, to all of the pitch curves, and its point of tangency with any of the curves corresponds to the diameter which gives radial flanks for the pitch represented by such curve. This relation is verified by analysis.

Mr. Wilfred Lewis.—The paper under discussion presents the problem of determining the pitch of a gear wheel when the diameter, the face, the working load, and the working stress are given or assumed, thus reversing the common order of procedure to find the strength from the pitch, the face, the number of teeth, and the working stress.

It is no doubt true that the pitch for a given load may be required in practice as often as the load for a given pitch, and it must be admitted that the diagrams presented give a direct solution for the pitch from the assumed conditions where previous methods have been more or less tentative. But the number of teeth, being at first unknown and dependent upon the pitch, may be such as to require a revision of the case, or the assumed face may result in a pitch difficult to realize, or inconvenient for the ratio of gearing desired. Thus, while these diagrams form a valuable addition to the general treatment of the gear problem, I think the conditions to be met in practice are so varied that the face and diameter cannot often be accepted as hard and fast conditions upon which the pitch can be surely based.

As the best design is generally the best compromise between conflicting conditions, which must be carefully studied, a number of possibilities must be considered before making a choice, and in determining the available gearing for a given case, the choice of method will surely be along the line of least effort.

Since the publication of my "Investigation of the Strength of Gear Teeth" some four years ago, a number of ingenious diagrams have appeared, to accomplish the same result with less mental effort.

Without questioning the advantage of the graphical method where it can be directly applied, a multiplicity of intersecting lines is obviously confusing and difficult to follow, and I think there are cases, like the gear problem in general, where formulas and tables are decidedly preferable. This, however, is a matter on which a difference of opinion can be easily tolerated, and if some prefer to trace the result through a network of lines, while others prefer to follow the steps in a simple formula, aided by a convenient table, both methods are surely desirable and the choice of one or the other will depend upon individual temperament.

The diagrams in this case are admirably designed for the assumed conditions, and the result is reached by an easy course through a comparatively simple network of lines. As the number of teeth is implied in the diameter and pitch, the particular phase of the gear problem here presented becomes difficult to solve directly by a formula, though it may be solved tentatively with rapid convergence by that means, and the graphical method employed is certainly well adapted to the conditions imposed. If the number of teeth were one of the conditions, as frequently happens, however, the diagrams under consideration would lose their special significance and the pitch would be found more easily by some of the other diagrams, or by the formula and tables at first proposed. Considering the number of factors involved in the general gear problem and the large number of intersecting lines required for its graphical solution, I am disposed to adhere in my practice to the formula and tables as being in general quite as rapid and less liable to error in actual use.

The usual problem, to determine the working load from the pitch, face, and number of teeth, can be solved with surprising rapidity with the aid of a common slide rule and a table of coefficients, while, with a special slide rule designed for the purpose, as described by Mr. F. A. Halsey in his paper, entitled "Some Special Forms of Computers," * read before this Society at its meeting in December, 1896, the solution is even more rapid and satisfactory. The computer there chosen to illustrate the subject happened to be for the "Strength of Gears," by Mr. Wm. Cox, whose skill in designing these labor-saving appliances has been demonstrated in various ways and is now well known. By this means it is possible to see at a glance all the combinations of pitch and face which will give a certain working strength or power, the number of teeth being known, and the corresponding coefficient being selected from a table. If the diameter is given, as assumed in the paper under discussion, and the number of teeth is at first unknown, to find the pitch for a given working strength and a given face, a trial coefficient—say 1,000—can be joined to the working strength, indicating at once the first approximation to the required pitch, then using the scales of "horse-power" and "pressure coefficients" as an ordinary slide rule, the number of teeth corresponding to this pitch is quickly seen, from which a new coefficient can be selected to indicate a new pitch. The method is so rapidly convergent that no closer approximation than the second will generally be required; and although the process is not so direct as that of the diagram, the result, I think, is more satisfactory because no interpolation is required for diameters not appearing in the diagram. I do not wish by this to detract from the credit due Professor Jones for his ingenious

---

* *Transactions* A. S. M. E., vol. xviii., p. 70, No. 702.

method of arriving at a direct solution of the problem assumed, but simply to point out the possibility of solving the same problem by a rapid method which includes more general conditions.

In the general formula $W = CFSX$, as given in Mr. Barr's discussion, a comparison is made between the factor $X' = \left(.124 - \frac{.888}{N}\right)$ accredited to my investigation, and the factor $X'' = \left(.106 - \frac{.678}{N}\right)$ deduced by Mr. Barr from Professor Jones's paper, showing a difference which, I think, is easily explained by the difference in the systems of form considered and by the difference in treatment. The value quoted for X' by Mr. Barr was deduced for a system of cycloidal gearing, described by a writer in the *American Machinist* under the style of "Bell Crank," where the describing circle was half the diameter of a twelve-toothed pinion, and the fillets were equal to the clearance at the root of the teeth. The fillets used in my original investigation were as large as possible, to clear an engaging rack for which I had found $X''' = \left(.124 - \frac{.684}{N}\right)$, and the other value was deduced to show the important effect of the fillets upon the strength.

Professor Jones adopts another describing circle equal to half the diameter of a fifteen-toothed pinion, another system of fillets, and another supposition in the application of the load. It is allowable, of course, to assume any system of form and any rational standard for fillets, but I think an exception may properly be taken to the professor's assumption that the load is applied tangentially at the end of a tooth, instead of normal to its face, as it actually occurs. I agree that it is not worth while to consider the difference between the pitch and the addendum radii in an investigation of this kind, but I maintain that the strength of the tooth, as affected by the direction of thrust at the end of its face, is a matter of considerable importance, shortening as it does the effective length of the cantilever and subjecting the whole tooth to a considerable amount of radial compression which outweighs by far the influence of shear upon tensile stress which the professor considered and abandoned. In my investigation the radial compression was disregarded as an uncertain element of strength or weakness depending upon the relative strength of the material used for tension and compression. For cast iron, which is stronger in compression, this radial compression is a decided element of strength, reducing as it does the transverse tensile stress, while for steel it might be questioned whether a tooth would yield first on the tension or on the compression side. The error, whatever it may be, is, however, most probably on the safe side.

By the difference in the assumed direction of the load applied, my results are naturally higher than those of Professor Jones, and, as I claim, more accurate. Of course, it does not matter how the weakest section of a tooth is determined, whether by successive trials as advocated by the professor, or by graphical construction, but it is surprising to be told that his results were obtained by the former method "with fully as much accuracy and far more rapidity than by drawing the maximum inscribed parabola whose vertex is at the top of the tooth and on a radial line through the centre of the tooth, and then calculating the strength of a tooth of one-inch thickness with the parabolic outline thus obtained, which strength is that of the tooth."

I think I may safely claim to be the first to devise and use a method based on the parabolic outline, but I never constructed a parabola within the tooth as above described except to illustrate the principle in my paper, nor did I ever calculate the strength of a tooth from the parabolic outline thus obtained. As described in my paper, I simply located the weakest section of the tooth by means of a parabolic tangent, and then, by means of two lines at right angles, constructed on the tooth itself a length proportional to its strength. To reduce this to one-inch pitch was merely a matter of scale, and there was no calculation about it required. The method is certainly more rapid than that used by Professor Jones and more accurate, because there is but one thing to measure, the factor of strength desired.

In regard to the number of teeth in gear distributing the load, I am quite sure the methods of forming and spacing have not yet reached such perfection that it is safe to consider more than one tooth in gear. To obtain more than this, a variation in form or pitch can only be met by the elasticity of the tooth itself, which is a short stiff cantilever almost devoid of spring. Let any one who doubts this conclusion calculate the deflection of a tooth as a cantilever under its working load, and then consider the possibility of construction within the degree of accuracy thus required. The steps in a series of equidistant cutters are far more than the spring of a tooth can begin to accommodate, and these steps represent the tolerated imperfections in form, to say nothing of the difficulty of perfect spacing. In regard to the merits of short and long teeth, it should here be said that short teeth cannot belong to the interchangeable class for which your formulas, tables, and diagrams are devised. Teeth for special purposes can be made as long or short as the special conditions will permit, but for interchangeable gearing, the standard proportions are about right, and cannot be departed from without encountering serious difficulties in extreme cases.

Mr. H. H. Suplee.—While, of course, this paper treats of the relative strength of gear teeth, I think it must not be overlooked that the question of wear enters very largely into the proper proportions. In other words, a gear system may be strong enough, and yet it may be so proportioned that it will wear out very rapidly. I have found myself very often it is advisable to make the face wider than is demanded for strength, so as to distribute the pressure and keep the wear within reasonable limits. Another point: teeth rarely break from the regular working stress to which they are subjected. They break from shock or from something getting between them, or, in other words, from conditions which it is almost impossible to measure or predict. I call attention to this point because gears, which are carefully proportioned, very often go to pieces, and it is therefore advisable to add a very large margin for the conditions under which they must work. Professor Reuleaux has suggested that the question of wear be taken into account, in proportioning gear teeth, in the following manner: The product of the pressure per inch of face by the number of revolutions per minute may be called the coefficient of wear. Thus, if P be the total pressure upon a tooth, and b the breadth of face, n being the number of revolutions per minute, we have:

$$\frac{Pn}{b} = \text{coefficient of wear.}$$

Reuleaux says that, for good results, this coefficient should not be greater than 28,000, and, if possible, it should be taken as less than this value. When sufficient space is available and a low value can be given to this coefficient, it is advisable to do so; if this cannot be done, the coefficient which is selected will give an indication of the proportional amount of wear which may be expected. (See *Constructor*, p. 146, Am. edition.)

Mr. Oberlin Smith.—I think Mr. Suplee is right in advocating wide faces—that is, for *cut* gearing. Of course an evil which may arise is springing of the shafts, getting them out of alignment. It is not worth while in these days of accurate work to consider the shafts being originally set out of line, as they used to be in the old days of cast gearing, where there always had to be strength enough so that the teeth could drive by one corner, especially where they were cast tapered. We now make reasonably true cut gearing, the teeth parallel with each other and in the plane of the shaft, and we place our shafts approximately in line so that we can afford to make our gear faces very wide; but as a general rule I think they are not made as wide as they might be. I have in many cases made them wide to advantage, even doubling the usual width sometimes. The chief thing to guard against in such a case, where we make a very wide-faced wheel, is, of course, to make the shafts strong enough, assuming that they are originally placed in line, so that they will not spring, and the pressure be brought on one corner.

Mr. C. W. Hunt.—It may be of interest in connection with this paper to give the present practice of the company with which I am associated in their use of cast-iron spur gears of comparatively small size, running from about seven inches to seven feet in diameter and with teeth having a circular pitch of from one to three inches. These gears are used for coal-hoisting engines and machinery of a similar character, which generally run in situations where it is impossible to have a solid foundation for the machinery. The cast iron is a good quality of foundry iron, but no special pains are taken to get an extra quality, and it represents iron which can be obtained at ordinary foundries without difficulty. Our experience corresponds with the statement made by Mr. Suplee, that the face of a gear, beyond a certain width, does not add to its strength; it adds to its durability, but not to its strength to resist stress.

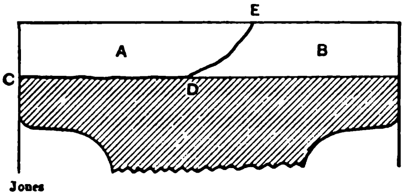

FIG. 248.

To illustrate this by a practical example, which is typical of our experience, take the case of a pair of cast-iron spur gears, with twenty-three and seventy-nine teeth, two inches pitch, seven inches face, which failed repeatedly under loads which we know with substantial accuracy. The engine ran about ten days, when a tooth in the pinion broke. The break was along the line *CDE* (Fig. 248), the piece *A* breaking out. The part *B* of the tooth was left intact. The gear was continued in service, but in about ten days after, another tooth on the opposite side of the pinion broke, the piece breaking out being about the same size and form as the first one. The engine continued in service but a few days, when the remaining part of the tooth marked *B* in Fig. No. 248 failed. The pinion was taken out and a new one of the same material substituted. This ran about the same length of time as the first one, when one of the teeth failed in the same manner as the previous ones. A few days later the part *B* also failed, when a steel pinion was substituted, which stood the service permanently. As all of the breaks followed the line *CDE* in Fig. No. 248, we can assume that the equivalent of this fracture fairly represents the width of the face which can be depended on for estimating the strength of the teeth of spur gears. This line *CDE*, we estimated, was equivalent to the strength of a tooth having a face equal to twice the pitch. From this test we may assume that, for the purpose of calculating the strength of the tooth of cast-iron gears, the width of the face should be taken equal to twice the circular pitch. The teeth failed with a load of 10,000 pounds on the tooth, which brought a fibre stress of 3,800 pounds per square inch on the metal at the root of the tooth, assuming in the calculation that the tooth was a cantilever with the load on the end. As we had five breaks in succession where the load was known with reasonable accuracy, we have assumed that 3,800 pounds fibre stress represents the breaking strength of a cast-iron gear tooth in this kind of service. The teeth of the gear wheel did not fail; hence, as the teeth of the pinion are weaker than those in the gear wheel, we may omit all consideration of the larger gear in computing the strength of the teeth.

A few years ago Mr. Michael Longridge, of Manchester, England, made prominent the defects of long gear teeth, and recommended those much shorter than the general practice. This was so radical a departure that, while it appealed strongly to reason, it was some time before I could decide to recommend a change of our proportions and make the short teeth which he recommended. In using short teeth it is necessary to make the strength of a single tooth sufficient to carry the whole load, and abandon the principle of having more than one pair of teeth in action at all times. We eventually tried the experiment of shorter teeth, and the results were exceptionally fine. They ran more like cut gears than like cast ones, and were obviously much stronger. We use the proportions shown in Fig. No. 249.

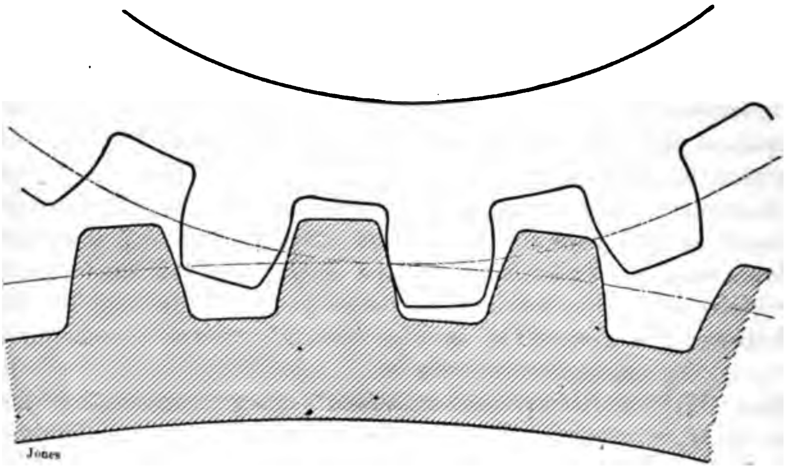

FIG. 249.

By comparing this with the usual proportions shown in Fig. No. 250, the difference in the length, and consequently the strength, will be seen. The strength of the two forms is in inverse proportion to the length of the teeth, or as 100 is to 150.

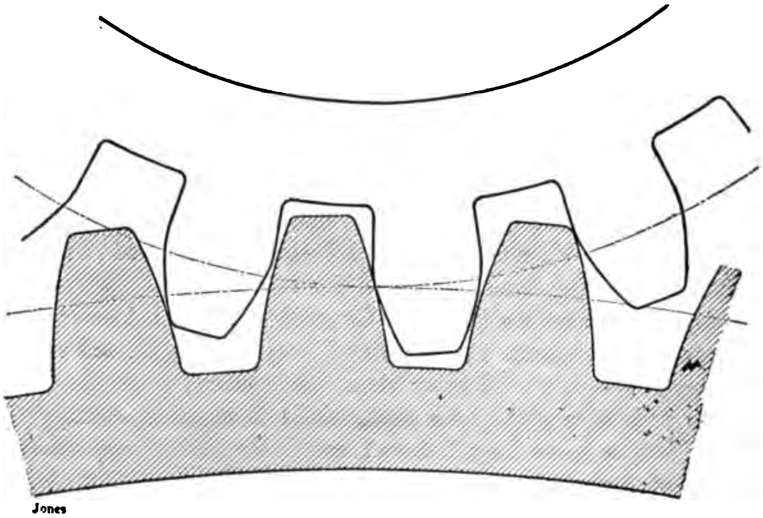

FIG. 250.

Two cases usually arise, one where the load is variable but maximum load is known, and the other where the working load is substantially a constant amount. For the first case a fibre strain of 2,500 pounds and for the second a fibre stress of 2,000 pounds gives excellent results.

The clearance is necessarily larger than for cut gears, and is larger in small than in large gears, which we consider necessary, as gears are not usually absolutely round and also have slight irregularities on the points and on the bottom of the teeth, which are comparatively greater in small gears than they are in larger ones. The most difficult problem was to decide just what proportion to use, and here engineers may differ as they give one or another factor greater prominence. The formula here given has been used for several years with ever-increasing satisfaction. In our design we do not use pinions having less than twenty teeth.

The length of the teeth and the clearance are intended to be sufficient to permit a slight variation in the castings arising from the difference in the shrinkage of wheels made at different times, and also to allow a reasonable amount for the wear of the shaft bearings without affecting the good working of the gears.

P, circular pitch in inches.
A, addendum.
D, dedendum.
F, face of tooth in inches.
C, clearance.
W', maximum load in pounds.

$A = .2\,P.$ $\qquad W = 1{,}320\,P.$
$D = .2\,P.$ $\qquad W' = 1{,}650\,P.$
$C = .05\,(P + 1).$ $\qquad F = 2\,P + 1.$

I append a table of the working load in pounds on a cast-iron short-tooth spur gear of twenty teeth. The last two figures in the result are approximated.

P. Pitch in inches.	*W.* Working load in lbs.	*W'.* Maximum load in lbs.	*P.* Pitch in inches.	*W.* Working load in lbs.	*W'.* Maximum load in lbs.
1	1,320	1,650	2¼	6,700	8,300
1¼	2,300	2,600	2½	8,300	10,500
1½	3,000	3,700	2¾	10,000	12,500
1¾	4,100	5,000	3	12,000	14,800
2	5,300	6,600			

Mr. Kent.—Do you use involute teeth?

Mr. Hunt.—We use involute teeth only.

Mr. Oberlin Smith.—I want to deny Mr. Hunt's first "fact" —the general statement that making the gear wider does not make it stronger. I will admit that in practical working, it is very often the case with certain classes of gears that it does not do any good to make the face wider, simply for the reason that the shafts spring out of line; but assuming shafts that do not spring, for instance, if a pinion and gear are set right between two bearings, with their shafts but little longer than themselves, so that their own strength, being of so great diameter, will prevent any bending, I don't believe the statement that increasing the width does not increase the tooth strength. Where the gear is on the end of a shaft and overhangs the bearing, of course the shaft will spring, but how much depends on the diameter of the shaft? On a very large shaft the gear could be much wider than on a slim and springy shaft. But assuming the element of the springing of the shafts out of line to be practically eliminated, it must be evident that a gear two inches wide is twice as strong, or more so, than a gear one inch wide; for if we put them apart on the same shaft one gear would drive X pounds and the other would also drive that much, and they would both together be driving $2X$ pounds. It would not hurt them to slide them up until they touched one another, when they would practically become one gear; and if we merge them together so that they are one piece of metal instead of two, we have them somewhat stronger still, because the teeth are joined together and are braced and supported, preventing to a certain extent the danger of corners breaking off. The other point Mr. Hunt brought up I fully agree with. I believe in making a gear tooth as short as it can be made and run properly, consistently with wear and driving quality, rather than to use some of the old-fashioned long teeth.

Mr. Geo. I. Rockwood.—I think that Mr. Smith is not talking about the same class of gears which Mr. Hunt has in mind. His remarks refer to gears which are fit to run in the finest presses, whereas Mr. Hunt has reference to gears fit for rougher work and subject to accidental strains.

Mr. James Hartness.—Mr. Rockwood's remarks regarding the difference in the condition of the rough and cut gear cover about what I had to say, excepting that I think the difference between Mr. Smith and Mr. Hunt would exist if there was no coal or other substance dropping between the gears. The width of cut gear may be considerably greater than that of rough gear, and I think that is the principal difference between Mr. Smith and Mr. Hunt.

Mr. Suplee.—In regard to Mr. Hunt's statement, I think it is very fully borne out by the style of gear to which he refers—that is, to well-made cast gear. I think Fairbairn made a large number of experiments or gathered a great deal of information on this subject, and showed that broken teeth almost invariably fracture from one corner across to the base. It is very rarely that we find a good tooth breaking entirely off at the root. The break starts on one corner and runs diagonally upward. He found that the part of the tooth which broke off was about two and one-half times the pitch, and I think he made the proposition that if the face was two and a half times the pitch, the tooth was as strong as it could be made; it would break across the corner anyhow. Of course this referred to cast gearing as used in mill transmission and not to the cut machine gearing.

Mr. Oberlin Smith.—I think I was a little misunderstood in regard to Mr. Hunt's statement. I admitted that in practical work, and especially with cast gearing and springing shafts, there was a limit, and that Mr. Hunt was somewhere near right as to the practical width of gears. I only objected to the general statement that the width of the gear did not increase its strength. It is too general, and does not apply to a case where the cut gearing is nicely fitted and the shaft does not spring. In that case I say the strength *does* depend on the width, and is about as the width.

Mr. Gus. C. Henning.—I think a word ought to be said in favor of cast gear if they are made in the proper manner. As cast gear are generally made using a wood pattern in sand, moulded up, when hot metal is poured in, the result is anything or nothing—cracked gear or anything else. The strength of such gear cannot be determined except accidentally. But there is a way of making cast gear so that they will be nearly as good as the best cut gear, and it is a very simple way. Take a cut pattern and mould it up in a material that will bake pretty hard; then leave the gear right in the mould, and put the whole flask and pattern in the core oven and bake it. The result will be that, as clay or sand expands less than metal, the expanding metal pattern will crowd the sand so that upon cooling, the pattern will lie loose in the mould, and it can be taken right out. The cope is then put on, and before the flask is cold the metal is poured into the flask, which is free from dirt or dust. The dust can be blown out with a blower if it is necessary, but there really is not sufficient dust in the flask to hurt the casting. The metal is put into the hot flask, and the result will be gear which is sufficiently good to run in a printing press without any noise. These gear are used on printing presses, and people who use them do not know that they are not cut gear, because if the cut gear used as a pattern has the slightest tool mark on it those tool marks will appear in the casting. Such gear are used at the present time. I think the patent on this method expired long ago. Such gear are strong. As the mould is hot when the metal is poured in, the shrinking or cooling strains are less, and the metal is not chilled so rapidly when it reaches the mould. It is, of course, chilled, but not so fast; and, besides, the hot flask, with all the material in it, helps to anneal the iron during the cooling process, so that an almost uniform condition of metal is obtained in the gear. In ordinary cast gear there may be anything but a true gear. There are shrinking and cooling strains, possibly a bad core, slight cracks in the corners, even though they are not true shrinkage cracks; there are surface shrinkage cracks which are, I think, generally disregarded, but they are of importance in considering the strength of a gear. Some loose material will perhaps get in the surface of the gear, and as soon as the metal begins to wear down it will wear badly. There are other reasons why an ordinary cast gear is never as strong as the formula indicates; and all formulæ, except when applied to cut gear or annealed gear, should be empirical rather than rational, for the reason that the factor of uncertainty cannot be readily applied to a mathematical—a rational—formula any easier than determining a few strengths of different gear empirically, and then using a formula constructed on those results as a basis. But the method which I have described will give satisfactory results, and can be used for large and small gears with equal facility. These gear patterns require no taper because the metal expands very much more than the surrounding material, and they can easily be lifted out without any trouble whatever, and the material surrounding the pattern being baked hard, of course, has considerable strength, especially when the material has been saturated with some baking material or substance. There will be no difficulty whatever in doing that, and a gear will be obtained which is equally strong in all parts and one which operates with uniformity. Any one who has seen printing presses run knows how perfect these gears must be in order to run smoothly for long periods of time without the slightest interruption.

Mr. Chas. L. Newcomb.—I would like to inquire how large a gear they can make this way. It seems to me when you put the pattern into the oven and bake it and dry the sand the pitch line must change, and it cannot be correct in the dried mould, for if a large gear—say, ten feet in diameter—was made this way to gear into one two feet in diameter, it strikes me there would be an uncertainty as to where the pitch line would be, and it would not be in the proper place. Therefore the gears would not run well together. If the gears were made correct on this manner, the method would be practical only for small gears for light work produced in large quantities.

In view of all that has been said, and the present general practice, I believe there is no better way of producing accurate, strong, and durable gears than by the up-to-date methods of planing and milling.

Mr. Henning.—I know of gear 48 inches in diameter having been cast that way, which ran perfectly, and the pitch line did not change, because when the material begins to cool down sufficiently to be a solid mass the clay or sand begins to cool off with it and the two go together. In the first place, the pitch diameter was changed by the expansion of the gear in the mould; but originally that clay was tight to the wheel, and, on the other hand, the molten metal coming in will shrink a little more than the mould will afterwards, so practically they are the same thing. The gear cannot be heard when running, any more than cut gear. If that is true the gear must certainly be run together so nicely that the variation of pitch diameter is immaterial. They can be seen running on all of the new presses of the Walter Scott Company in Plainfield, New Jersey. They are putting them on all presses now, since about two years, and no one knows that he is using cast gear instead of cut gear because they give the same satisfaction. They are experimenting now on larger gear.

Mr. Smith.—I should think a round flask would keep the clay more uniform in shrinkage, whereas a square one might change its shape on account of more clay or sand at the corners.

Mr. Henning.—The founder does not pay much attention to that because there is always so much packing material around the pattern. I believe he is guided by the size of his baking oven. If he can get the flask in the oven he takes a flask of that size.

The President.—I notice several gentlemen have spoken of gear running a long time. I see in the audience a gentleman who has been using them for many years. I call on ex-President John Fritz. I think he can give us some experience of days back before we were born.

Mr. John Fritz.—Unfortunately I am not a talker, but I must say I have listened to this discussion with a great deal of interest. Fifty odd years ago I could have told you something about making gear. We tried all kind of curves and all kinds of teeth, broad and narrow, cut, cast, and everything else. In those days the more wheels a man got into a rolling mill the greater engineer he was. But the result was that in many instances they adopted practically the old cider plug form of cog. Nothing else would stand. But fifty years ago last December I swore eternal hostility to all gear wheels. I came to the conclusion that they were a source of trouble, and to-day I think I am right. I think if you will all go to work and try to avoid the gear, the more you avoid them the better you will be off. There are instances when it will be necessary to use them, but never use a gear wheel if you can avoid it, especially on heavy and irregular work.

I can certify to the fact that gears are conducive to profanity. I know we used to have a lot of cogs on hand of various shapes, and some segments of wheels, and I used to be called up in the night; the door bell would ring, and the first thing I would hear was "Gear wheel broken," so I would get out and fix the gear up the best I could to make it run until Saturday night or Sunday, and then put in another one. But for rolling mills the gear wheels are a curse; and I would not put them in to drive a train of rolls under any consideration or any place where you are going to have sudden jars. When it comes to lost motion and back lash, I don't want them. I am opposed to long faces on wheels or anything else or anybody—I don't like them; but if I have to get the strength and cannot do it without getting a long face, make a staggered wheel and box the ends of the teeth. Then you get double the strength if the shaft is out of line, because you have two points to break instead of one.

*Prof. Forrest R. Jones.**—The comparison, made by Professor Barr, of the relative strength of gear teeth as calculated by the formula of Mr. Lewis and that used in preparing the diagrams given in this paper, involves two systems of gears, and, therefore, does not show the real relation between the two methods. The Lewis formula, given above, is for cycloidal gears developed with a rolling circle whose diameter equals the radius of a 12-tooth gear of the same pitch as the teeth considered. The results presented in the diagrams are for teeth whose describing circle is of the same diameter as a 15-tooth gear. The former system gives stronger teeth, however they may be dealt with in making calculations.

It was not originally intended to give any formulas, but since the fundamental one has been developed by Professor Barr with an accuracy far within that of the data obtainable and of the assumptions which must be made for solving gear-tooth problems involving strength, his formula, followed by others developed from it, is given below. The notation is the same as used by him. It is repeated here for convenience of reference.

C = circular pitch in inches.
N = number of teeth in gear.
S = fibre stress in pounds per square inch.
W = load per tooth in pounds.

For a gear face one inch wide:

$$\left.\begin{aligned} W &= CS\left(0.106 - \frac{0.678}{N}\right) \\ C &= \frac{WN}{S(0.106\,N - 0.678)} \end{aligned}\right\}\text{For use when } N \text{ is known.}$$

$$\left.\begin{aligned} W &= CS\left(0.106 - 0.215\,\frac{C}{D}\right) \\ C &= D\left[0.246 - \sqrt{.0605 - 4.65\,\frac{W}{SD}}\right] \end{aligned}\right\}\text{For use when } D \text{ is known.}$$

---

* Author's closure, under the Rules.

For a width of gear face = circular pitch.

$$\left.\begin{aligned} W &= C^2S\left(0.106 - \frac{0.678}{N}\right) \\ C &= \sqrt{\frac{WN}{S(0.106\,N - 0.678)}} \end{aligned}\right\} \text{For use when } N \text{ is known.}$$

$$W = C^2S\left(0.106 - 0.215\,\frac{C}{D}\right) \text{ For use when } D \text{ is known.}$$

When the width of the gear face is equal to the circular pitch or bears a given ratio to it, the equation involving the diameter of the gear contains both the cube and square of C; hence no equation having a general solution for obtaining C when D, W, and S are given can be obtained from the original form given above. The last equation given can be used tentatively, of course, for this purpose, by substituting assumed values of C in it and solving, continuing until a satisfactory value is found.

The diagram given by Professor Barr is certainly decidedly convenient for the range which it covers.

The use of short teeth is unquestionably a step in the right direction. The wonder is that the change has not been made many years ago. The present proportions of long teeth seem to have come from those used when mechanical processes were far less exact than at present. Such proportions were necessary when gears were cast without much care and skill, were frequently fastened to their shafts so as to run out of truth, and were insecurely held in position by weak and springy supports.

Since the paper was closed with a disclaimer against any desire to discuss the accuracy of the assumptions made for determining the diagrams, the writer does not feel that this part of the discussion can be taken up by him, although the matter presented by those who spoke on this feature of the problem creates a strong desire to do so.

These diagrams were presented to the Society only after a trial of two years at the hands of students in machine designing. It was then thought that the time and work saved by their use warranted their publication.

DCCXXXV.*

TESTS OF THREE SULZER ENGINES.

BY HAMILTON A. HILL, BOSTON, MASS.

(Member of the Society.)

OUR fellow member, Mr. Carl Sulzer of Winterthur, Switzerland, one of the firm of Sulzer Brothers (Gebrüder Sulzer), has placed in my hands, for presentation before the Society, reports of three tests, made within three or four years, of large mill engines which seem to show better results economically than anything of which we have reliable reports in actual working in textile mills. I cannot but feel that they will therefore be of much interest to us as showing a step in advance in that movement toward higher economy which is a subject of so much importance in our Society. They have also an interest as bearing on the comparative economical value of compound engines and those of a higher multiple. There has been of late, in this country, a disposition to claim that compound engines could be made to give nearly the results of the triple, or at least that the added economy of the latter was not sufficient to counterbalance the additional cost and expense of maintenance of the triple. It is true that cases have come up, especially in our New England mills, which would seem to sustain this position, but I for one do not accept this theory, but believe that the triple engines did not have the best opportunity that could have been given them, or that particular conditions favored the compound in particular cases. It is therefore with the more pleasure that I present these reports which show economies over any reported cases of the compounds, which would certainly give a most substantial profit on any probable difference in cost and cost of maintenance. Another point of interest is to be noticed. It has been remarked that in this country the best economical results have been shown by slow-running pumping engines, contrary to the theory that

---

* Presented at the Hartford meeting (May, 1897) of the American Society of Mechanical Engineers, and forming part of Volume XVIII. of the *Transactions*.

speed should be a factor in economy. The economies shown in these tests have been gained by mill engines at comparatively high speed, which goes to show that there is, at any rate, no necessary advantage in a slow speed.

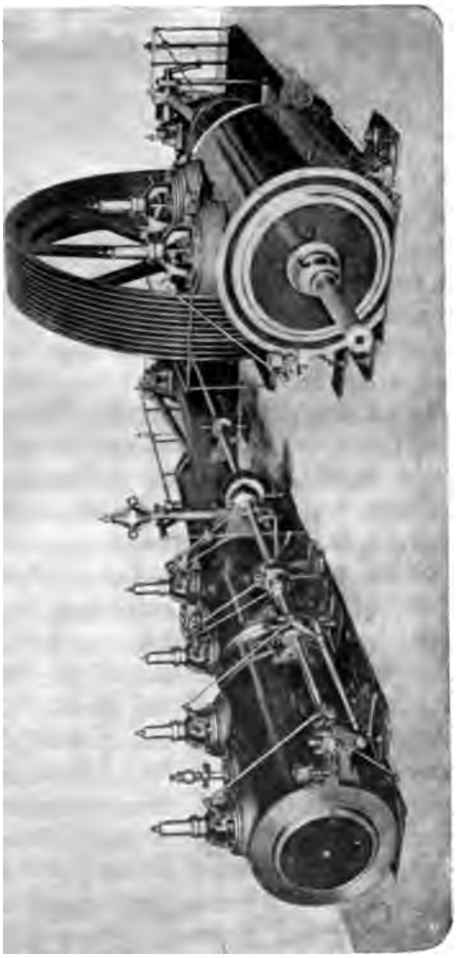

FIG. 251.

In regard to the firm which builds these engines, it is without doubt the largest establishment building stationary steam engines in the world, and there is hardly any country to which their products have not been sent. The works in Winterthur were founded in 1834, and an auxiliary establishment at Ludwigshafen, in Germany, in 1881. They have grown and prospered till now the parent establishment covers some 24 acres and the German branch 7½ acres, and the number of hands employed at Winterthur is some 2,750, and at Ludwigshafen over 700. To assist in transportation merely, they have in their yards at Winterthur two locomotives, one each of broad and narrow gauge, and two special locomotive cranes; and of shop travelling cranes driven by electricity or by rope, there are

2 cranes of 25 tons capacity
10 " " 20 " "
7 " " 15 " "
6 " " 12½ " "

and very many lighter ones.

Of engines of their special type they have built since 1867 some 2,400, many from 1,000 to 1,500 horse-power and upward. In addition to these, their engines are also built under license by important firms in England, France, Belgium, Germany, Austria and elsewhere.

The engines themselves are of the liberated valve-gear type (Fig. 251), the valves being of the double-beat poppet variety (Fig. 252), lifting with very little effort, and claimed by the makers to be, and to remain, tight.

With this introduction, which I believe the general interest of our Society in this famous firm will fully warrant, I present without further words the reports of tests which our fellow member has transmitted to me, at my request, for the purpose.

FIG. 252.

Vertical Triple Expansion Steam Engine of 1,300 indicated horse-power, built by Messrs. Sulzer Bros., Winterthur (Switzerland).

The engine illustrated (Figs. 253, 254, and 255) was constructed in 1891 for the Nicolski Manufactory Company of Savva Morosoff's Son & Co., Orechowo, near Moscow.

Its principal dimensions are :

Diameter of high-pressure cylinder	26	inches.	660 mm.
" " intermediate "	39.4	"	1,000 mm.
" " low-pressure "	59.1	"	1,500 mm.
Stroke	47.25	"	1,200 mm.
Revolutions per minute	76.		

The high and intermediate cylinders are placed on one side, the low-pressure cylinder on the other side of the fly-wheel. The wheel has 20'6" (6.300 m.) diameter and 32 grooves for 1¾" ropes.

The cylinders and all covers are jacketed.

The steam distribution is effected by double seat balanced Sulzer valves, those on top being seated in the cylinder covers, those at the bottom placed at the side of the cylinders.

The shaft from which the valve motions are derived lies along the cylinders, and receives its motion from the crank shaft through a vertical shaft and two pairs of spiral gears.

The admission valves of the high-pressure cylinder are actuated by eccentrics and a releasing gear which is varied automatically by the governor from 0 to 60 per cent. All other valves are operated by cams.

In addition to the ordinary governor, there is provided a second governor, which disconnects the steam stop valve as soon as the engine exceeds its regular speed by two revolutions per minute ; at the same time a valve is opened which freely admits air into the condenser, thus rapidly stopping the engine.

The injection condenser, into which the steam is discharged, is of the barometer type, the vertical discharge pipe opening into a water level which lies about 36 feet below the cylinders, and thus carrying off automatically the condensed steam. A single-acting air-pump removes the air from the top of the discharge pipe. It is driven from the cross-head of the low-pressure cylinder by a rocking lever which at the same time drives the two feed pumps, a factory pump, and a cold-water pump for raising the injection water to the necessary height, whence it is raised by the vacuum itself.

The steam cylinders are lubricated by oil-pumps ; sight-feed lubricators working on the principle of condensation are provided as an extra reserve.

All bearings and pins are sight feed, lubricated from an oil reservoir placed on top of the engine ; the flow of oil to each

Its principal dimensions are :

Diameter of high-pressure cylinder	26	inches.	660 mm.
" " intermediate "	39.4	"	1,000 mm.
" " low-pressure "	59.1	"	1,500 mm.
Stroke	47.25	"	1,200 mm.
Revolutions per minute		76.	

The high and intermediate cylinders are placed on one side, the low-pressure cylinder on the other side of the fly-wheel. The wheel has 20′6″ (6.300 m.) diameter and 32 grooves for 1¾″ ropes.

The cylinders and all covers are jacketed.

The steam distribution is effected by double seat balanced Sulzer valves, those on top being seated in the cylinder covers, those at the bottom placed at the side of the cylinders.

The shaft from which the valve motions are derived lies along the cylinders, and receives its motion from the crank shaft through a vertical shaft and two pairs of spiral gears.

The admission valves of the high-pressure cylinder are actuated by eccentrics and a releasing gear which is varied automatically by the governor from 0 to 60 per cent. All other valves are operated by cams.

In addition to the ordinary governor, there is provided a second governor, which disconnects the steam stop valve as soon as the engine exceeds its regular speed by two revolutions per minute ; at the same time a valve is opened which freely admits air into the condenser, thus rapidly stopping the engine.

The injection condenser, into which the steam is discharged, is of the barometer type, the vertical discharge pipe opening into a water level which lies about 36 feet below the cylinders, and thus carrying off automatically the condensed steam. A single-acting air-pump removes the air from the top of the discharge pipe. It is driven from the cross-head of the low-pressure cylinder by a rocking lever which at the same time drives the two feed pumps, a factory pump, and a cold-water pump for raising the injection water to the necessary height, whence it is raised by the vacuum itself.

The steam cylinders are lubricated by oil-pumps ; sight-feed lubricators working on the principle of condensation are provided as an extra reserve.

All bearings and pins are sight feed, lubricated from an oil reservoir placed on top of the engine ; the flow of oil to each

bearing can be easily regulated. The dripping oil is collected in the troughs below the cranks; from there it passes through filters, and is re-conducted by a pump to the reservoir on top, so that the same oil is in constant circulation. The consumption of oil is thus kept exceedingly low.

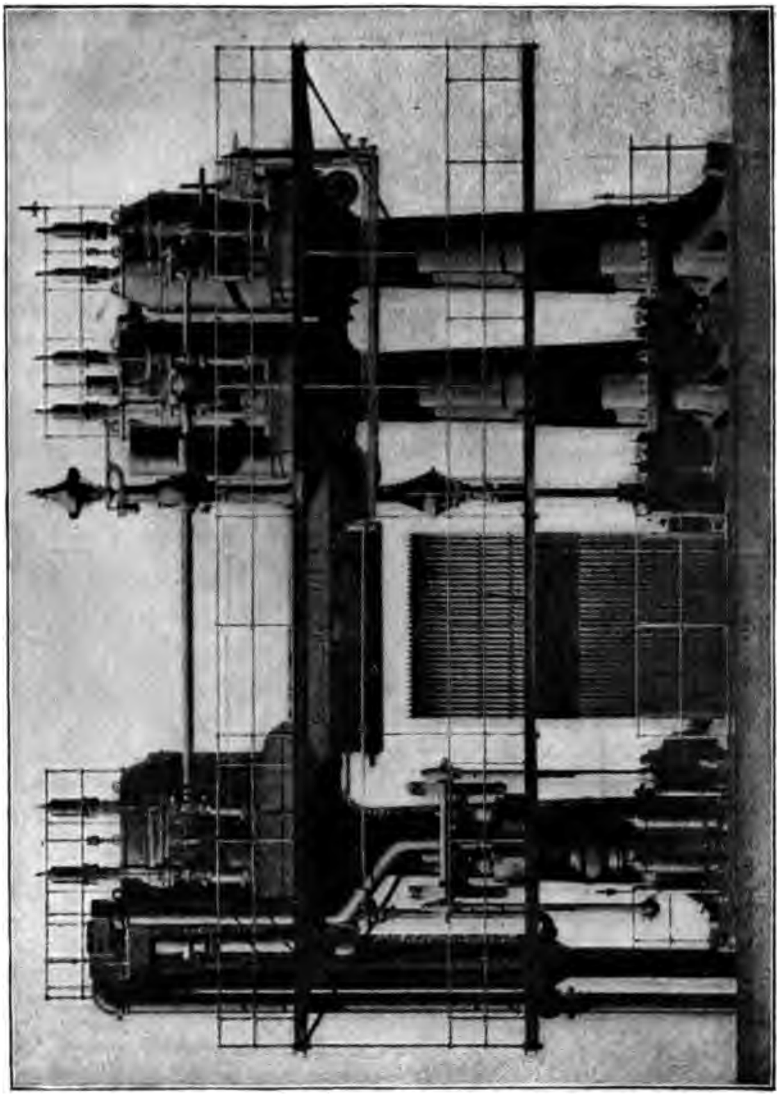

Fig. 255.

Convenient and ample platforms and stairs are provided to make all parts of the engine easily accessible. All moving parts are protected by railings. Stop valve, injection cock, blow-off cocks, etc., can be operated from the bottom of the engine as well as from the principal platform.

Consumption trials were made in December, 1893. The boiler pressure was 150 pounds per square inch. The boilers were of the well-known Babcock & Wilcox type. The load varied for the different trials between 1,150 and 1,250 indicated horse-power. Under these circumstances a steam consumption of 11.7 *pounds per indicated horse-power and hour* was recorded. The load has since been increased, and is now from 1,400 to 1,500 indicated horse-power. The engine is working exceedingly well and giving complete satisfaction.

Horizontal Triple Expansion Steam Engine of 2,000–2,500 *indicated horse-power, built by Messrs. Sulzer Bros., Winterthur (Switzerland).*

(From the special reports of the Society of German Engineers.)

This engine is driving the cotton mill of Mr. L. König, Jr., St. Petersburg. (Figs. 256 and 257.)

It is built as a four-cylinder engine, the low-pressure cylinder being divided in two owing to its size. There are on each side of the fly-wheel two cylinders, arranged in tandem. The high-pressure and one of the low-pressure cylinders act on the left-hand crank, while the intermediate and second low-pressure cylinder are opposite. The cranks are coupled at 90 degrees. Two air pumps are provided, corresponding to the two low-pressure cylinders.

The principal data are:

Diameter of high-pressure cylinder	30.	inches.	760	mm.
" " intermediate "	44.5	"	1,130	"
" " each low-pressure cylinder	51.6	"	1,310	"
" " piston rods	7.9	"	200	"
Stroke of all pistons	6.6	"	2,000	"
Revolutions per minute			56	
Diameter of each air pump	22.	"	560	"
Stroke of each air pump	23.62	"	600	"
Diameter of fly-wheel	29.2	"	8,880	"
Number of grooves for 2-inch hemp ropes			36.	

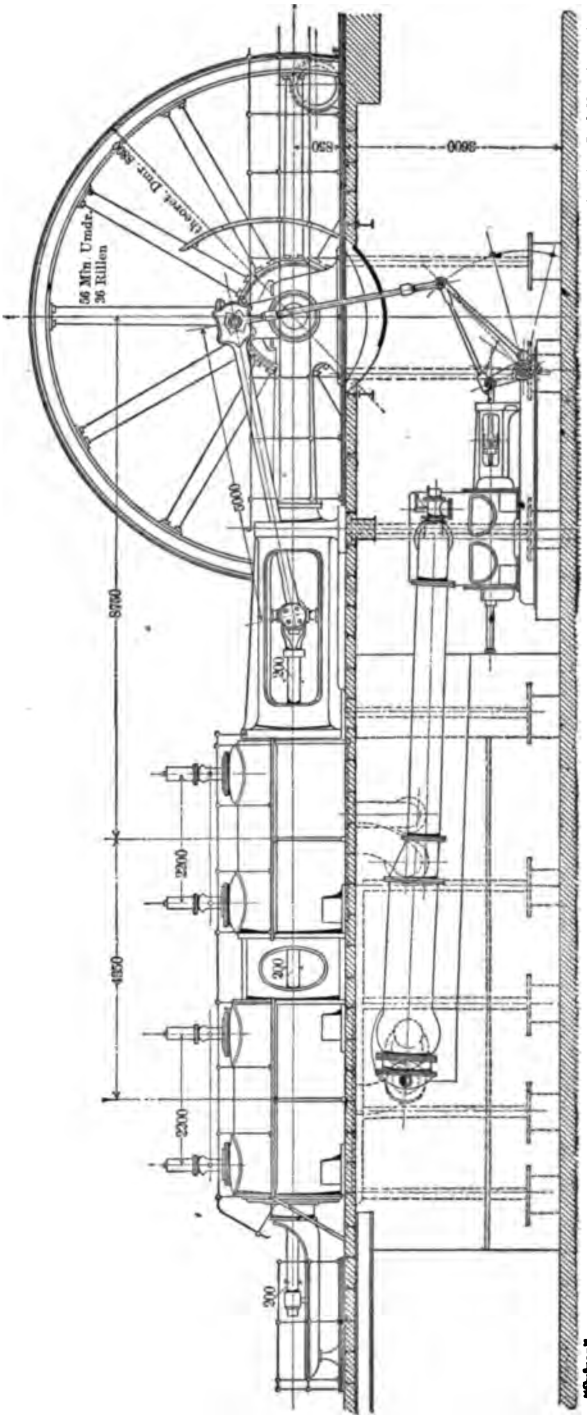

FIG. 256.

"Sulzer"

American Bank Note Co., N.Y.

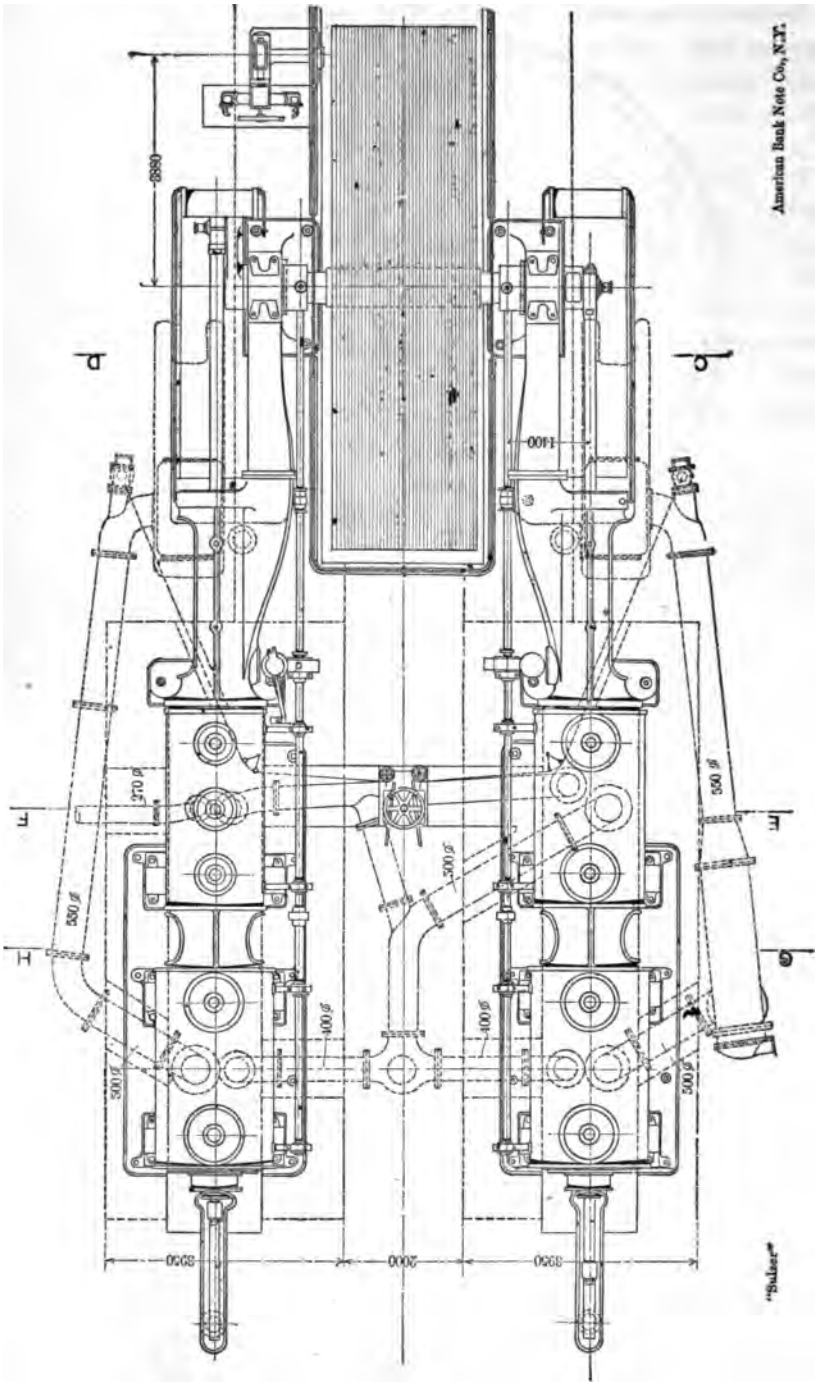

American Bank Note Co., N.Y.

FIG. 257.

The two cylinders on either side are connected to each other by strong intermediate cast-iron frames, allowing easy access to the inside stuffing-boxes and covers. All cylinders are seated on cast-iron foundation plates, upon which they are free to slide longitudinally, thus following easily the expansions caused by the heat. Cylinders and covers are provided with steam jackets, which are traversed by the steam on its passage to the respective cylinders.

The cylinders have liners of a special, very hard cast-iron mixture. The steam distribution is effected by four double-seat balanced valves, the inlet valves being arranged on top, the discharge valves at the bottom of the cylinder.

The engine frame is made in two parts for sake of easy transportation; the part next the cylinders containing the cross-head slides, the other one the crank-shaft pedestal. The two parts are connected by flanges and bolts, and rest with three strong feet on the foundation.

The crank-shaft bearings are made in four parts, adjustable by means of wedges; the bearing surfaces are babbitted. The diameter of the crank shaft is 17.3 inches in the bearings and 25.5 inches in the centre. The shafts running along the cylinders and actuating the valve motion are driven by double pairs of worm gears from the crank shaft. The governor is also driven by worm gearing.

The inlet valves of the high-pressure cylinder are operated by eccentrics and a releasing gear, which is varied automatically by the governor within the limits from 0 to 55 degrees; all other valves are operated by cams, which are adjustable by hand within certain limits.

The governor is provided with a safety arrangement, which automatically disconnects the valve gear and stops the engine.

Each side of the engine is provided with its own condensation, the air pumps being driven from the main cranks by means of vertical rods and angle-rocking levers. The pumps are of the horizontal type, double-acting. Two horizontal feed pumps are bolted to the foundation frames of the air pumps and also driven from the rocking levers.

Steam stop valve, secondary valves, injection cocks, blow-off cocks, etc., are all operated from the engine driver's stand, which is in the centre of the engine.

The steam cylinders are lubricated by means of oil pumps, the crank-shaft bearings by rotary pumps, which keep the oil in constant circulation.

Convenient platforms are provided along the cylinders, allowing easy access to the valves, valve gear, etc.

The fly-wheel is of the built-up type generally used in America. It practically consists of two independent wheels bolted to each other at the rims. The arms, 12 for each wheel, are cast hollow and secured to the hub and rim by four strong bolts. The wheel weighs 78 tons.

A barring* engine is arranged for turning the engine slowly; its gearing is automatically disengaged as soon as the main engine begins to run by itself.

For steam generation 11 horizontal Cornwall boilers are provided, each having 754 square feet heating surface, and 19.4 square feet grate surface. These boilers, which have also been built by Messrs. Sulzer Bros., are made of Siemens-Martin steel. Their diameter is 6 feet, length over all 28 feet 10 inches, diameter of corrugated flue 37½ inches to 41½ inches. Above each boiler and connected with it at the back end by short pipes of 16 inches diameter, are two horizontal steam drums of 24 inches diameter and 26 feet long, through which the steam passes on its way to the engine.

The combustion gases, after their passage through the boiler flue and along the shell, return along these drums, thus completely drying the steam.

The engine was started early in 1895, and accurate consumption trials were made in August of the same year by the engineers of the mill and the builders. The principal results are given below. Diagrams were taken every fifteen minutes from every cylinder end. The indicator springs were repeatedly tested before and after the trials, and the average of the scales thus obtained was taken as base.

The principal trials were carried out on August 10th and 17th; their duration had to be limited to about five hours for

---

* As barring engines are apparently not in use in America, though universal abroad on large engines, it may be of interest to explain that they are small engines with a gear on their main shafts standing beside the fly-wheel of the main engine. The gear teeth mesh into teeth cast in the face, the edge, or the inside of the fly-wheel rim, and turn the engine over when steam is not on. When the engine starts with its own steam, and the rim moves faster than the driving gear of the barring engine, the latter is so arranged as to throw promptly out of gear.

each trial, as the working conditions of the mill would not allow to go beyond this limit.

PRINCIPAL RESULTS.

No. of test		I.	II.	III.	IV.
Date		August 10		August 17	
Duration	minutes	306	322	272	327
Number of diagrams taken		8 × 20	8 × 23	8 × 20	8 × 28
Steam pressure at the entrance of first cylinder	lbs.	153	155	156.4	157.2
Vacuum on right side of engine, height of mercury	ins.	$27\frac{3}{16}$	$27\frac{3}{16}$	$27\frac{1}{8}$	$27\frac{1}{8}$
Vacuum on left side, height of mercury	ins.	$27\frac{5}{16}$	$27\frac{1}{4}$	$27\frac{9}{32}$	$27\frac{1}{4}$
Revolutions per minute		56.23	56.28	56.18	56.18
I. H. P. *	I. H. P.	1,897	1,860	1,875	1,848
Feed water consumption per hour	lbs.	21,710	21,148	21,315	20,731
Water condensed in main steam pipe per hour	lbs.	172.8	90.4	79.4	79.4
Steam consumption of engine (all jackets included)	lbs.	21,538	21,058	21,236	20,652
Steam consumption per I. H. P. and hour	lbs.	11.373	11.330	11.330	11.177
			Average	11.302	
Number of boilers at work		8	7	7	7
Total heating surface at work	sq. ft.	6,028	5,274	5,274	5,274
English coal burnt per hour	lbs.	2,496	2,489	2,385	2,154
English coal burnt per I. H. P. and hour	lbs.	1.316	1.338	1.272	1.167
			Average	1.274	
Water evaporated per sq. foot of heating surface and hour	lbs.	3.6	4.0	4.07	3.92
Water evaporated by 1 lb. of coal	lbs.	8.78	8.49	8.97	9.62
			Average	8.965	

Remark.—The boilers had been at work for from six to nineteen weeks without being cleaned, and the attendance of the fires left much to be desired; besides, the duration of each trial was very restricted. These circumstances may largely account for the differences and the somewhat unfavorable results of evaporation. In another plant at St. Petersburg, with exactly the same boilers and the same kind of coal, 10.2 to 10.4 pounds of water were evaporated at regular daily work, as evinced by numerous trials extending over a considerable length of time.

---

* The load has since been increased to 2,300–2,400 I. H. P.

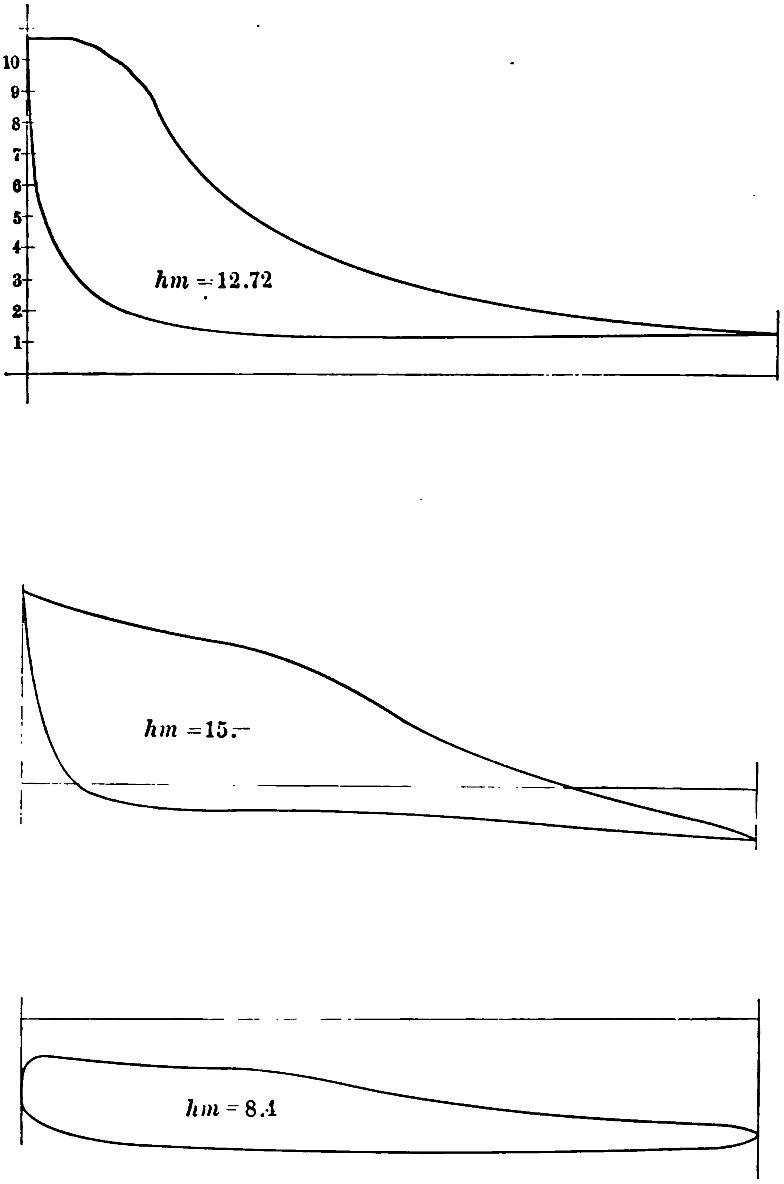

FIG. 258.

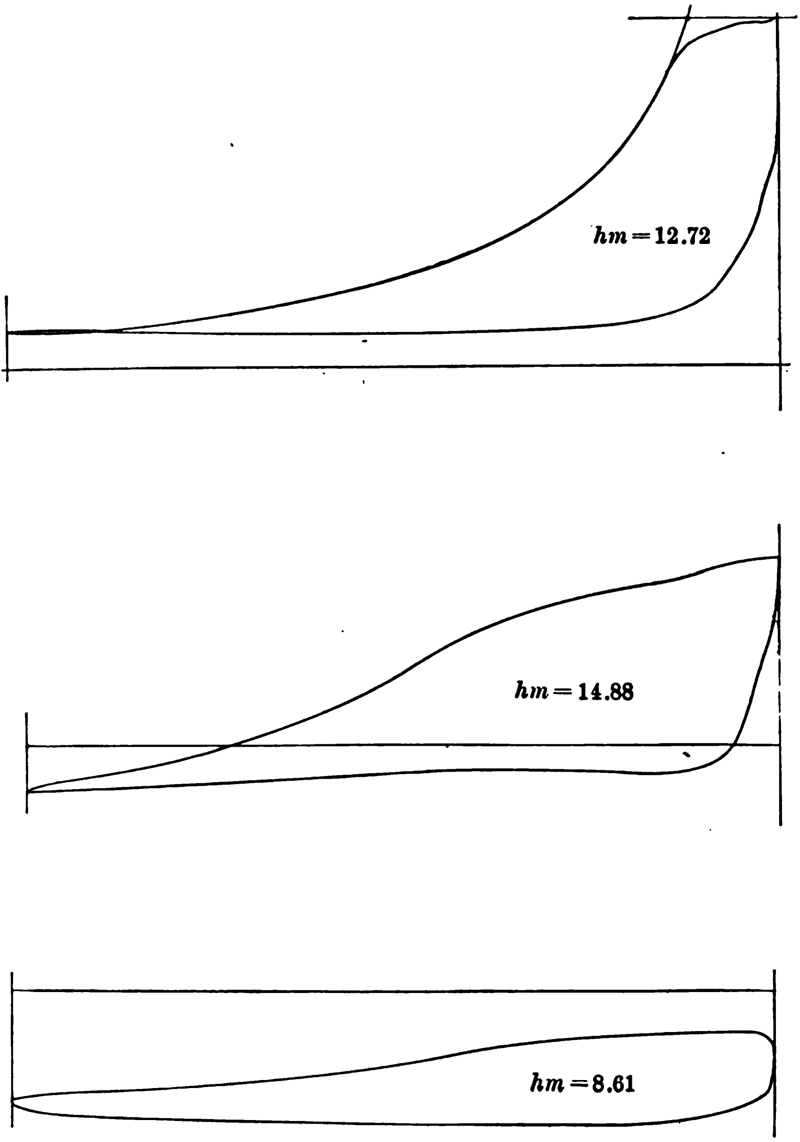

FIG. 259.

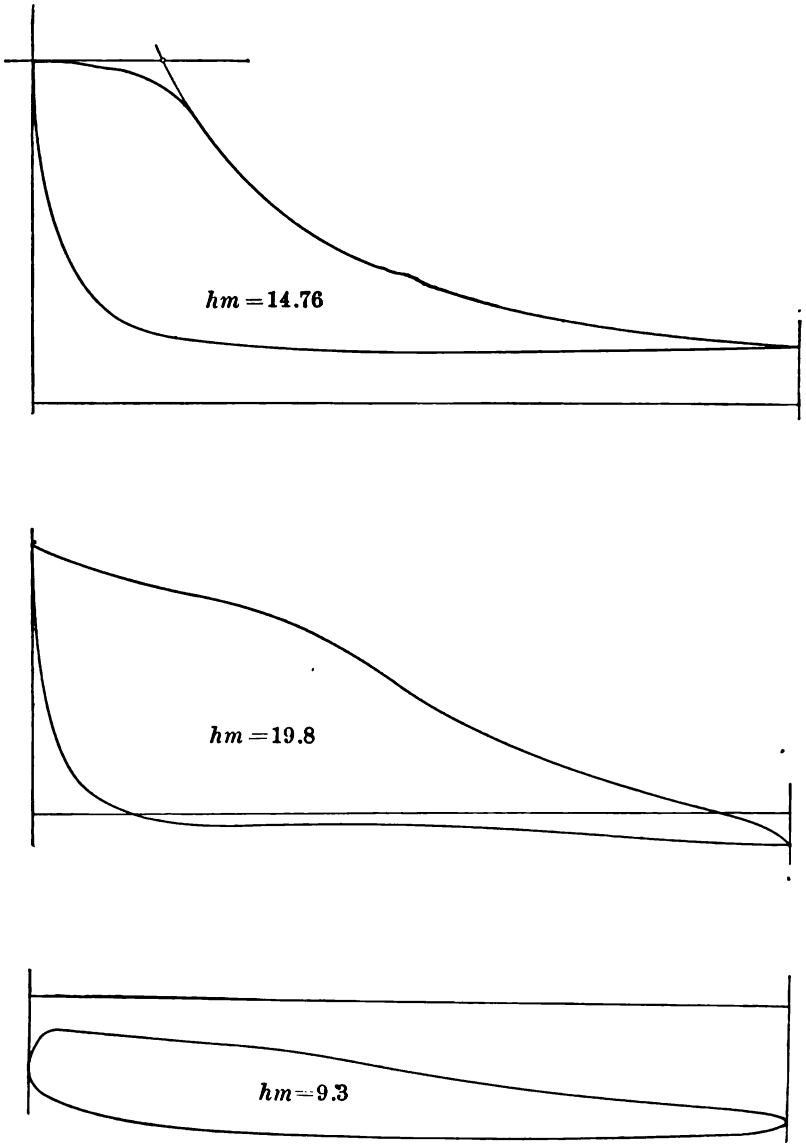

Fig. 260.

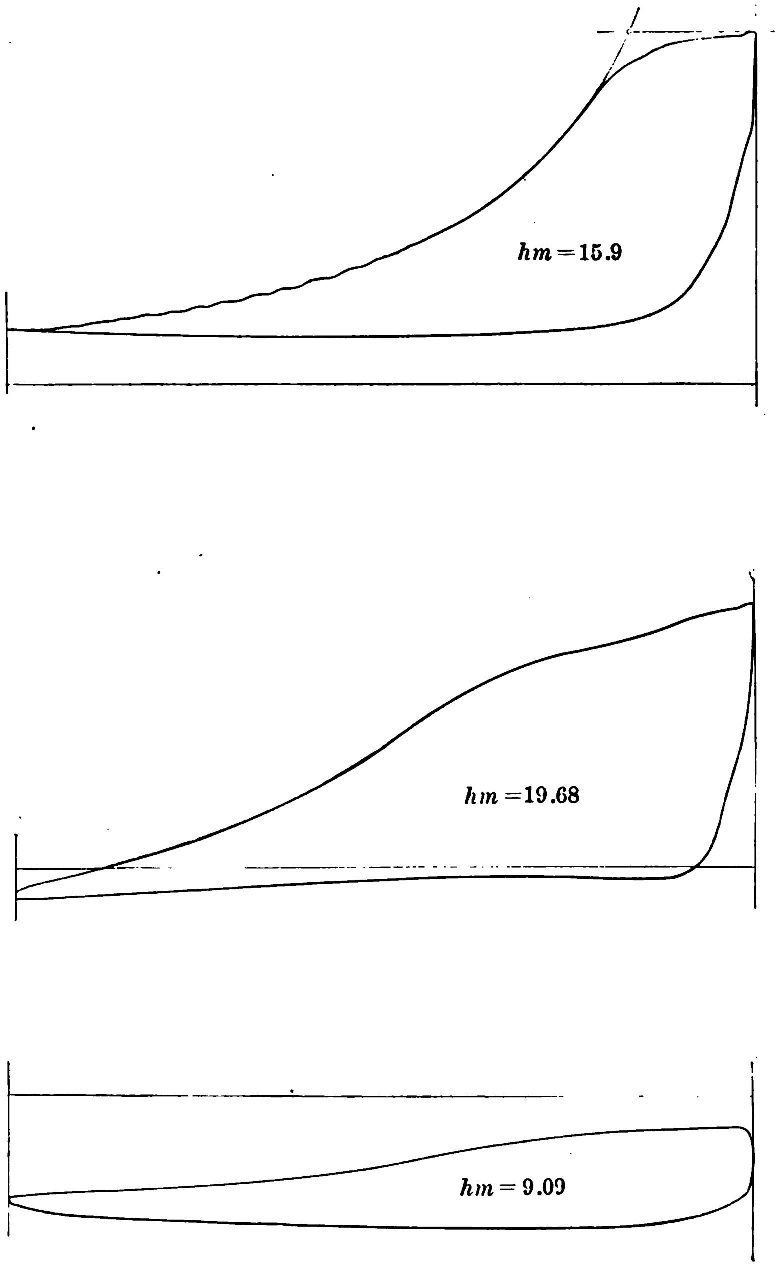

FIG. 261.

Extract from the official report upon the Consumption Trials of the Horizontal Triple Expansion Sulzer Steam Engine at the works of Messrs. C. F. Solbrig Sons, Chemnitz (Germany), December, 1895.

(From reports of the Saxon Boiler Inspection Co., office in Chemnitz.)

The principal dimensions of the engine are as follows:

Diameter of high-pressure cylinder	20.5 inches.	520 mm.
" " intermediate "	31.5 "	800 mm.
" " low-pressure "	47.25 "	1,200 mm.
Stroke	55.2 "	1,400 mm.
Revolutions per minute	66.	

The high-pressure and intermediate cylinders are arranged in tandem, acting on one crank; the low-pressure cylinder is placed opposite, acting on the second crank. The cranks are coupled under 90 degrees.

There were two principal trials made with the engine, one under ordinary working load, the other with electric light added. Steam was supplied by two Cornwall boilers of 969 square feet heating surface and 31 square feet grate surface each.

The steam was lightly superheated, as indicated in the table below.

RESULTS.

		Trial I.	*Trial II.*
Duration of trial	Minutes	204	279
Total consumption of feed water	lbs.	23,244	36,763
Water condensed in main steam pipe	lbs.	94.6	114.4
Percentage of condensed water to total feed water	p. c.	0.4	0.3
Total steam consumption of engine	lbs.	23,148	36,648
Steam consumption per hour	lbs.	6,808	7,881
Initial steam pressure	lbs. per sq. in.	168.75	168
Temperature of steam near the engine	deg. F.	386.6	388.4
Superheating of steam	deg. F.	16.2	18.0
Initial pressure in high-pressure cylinder.	lbs.	168	167.5
Cut-off	p. c.	0.16	0.225
Vacuum in low-pressure cylinder	lbs. per sq. in.	13.53	13.38
Barometer reading	ins.	28.¼	28.⅜
Efficiency of condenser	p. c.	0.93	0.93
Revolutions per minute		65.80	65.33
Piston speed	feet	605	601
Power developed.			
I. Cylinder	I. H. P.	257.6	280.5
II. Cylinder	I. H. P.	149.2	180.5
III. Cylinder	I. H. P.	224.0	274.1
Total I. H. P. of engine	I. H. P.	630.8	735.1
Steam consumption.			
Per I. H. P. and hour	lbs.	10.80	10.71

APPENDIX.

Since the original body of this paper was received from Messrs. Sulzer, some illustrative indicator cards (Figs. 258, 259, 260, 261) have been enclosed in a communication to the undersigned, in which, furthermore, certain views are expressed. The cards are from the Solbrig engine, but are reproduced as typical only, and are not the exact cards taken in the test of the engines above presented. The remarks on drop, jacket practice, and on superheating are quoted with the more pleasure as they express the very large experience of this Swiss firm on matters which are still much debated in this country.

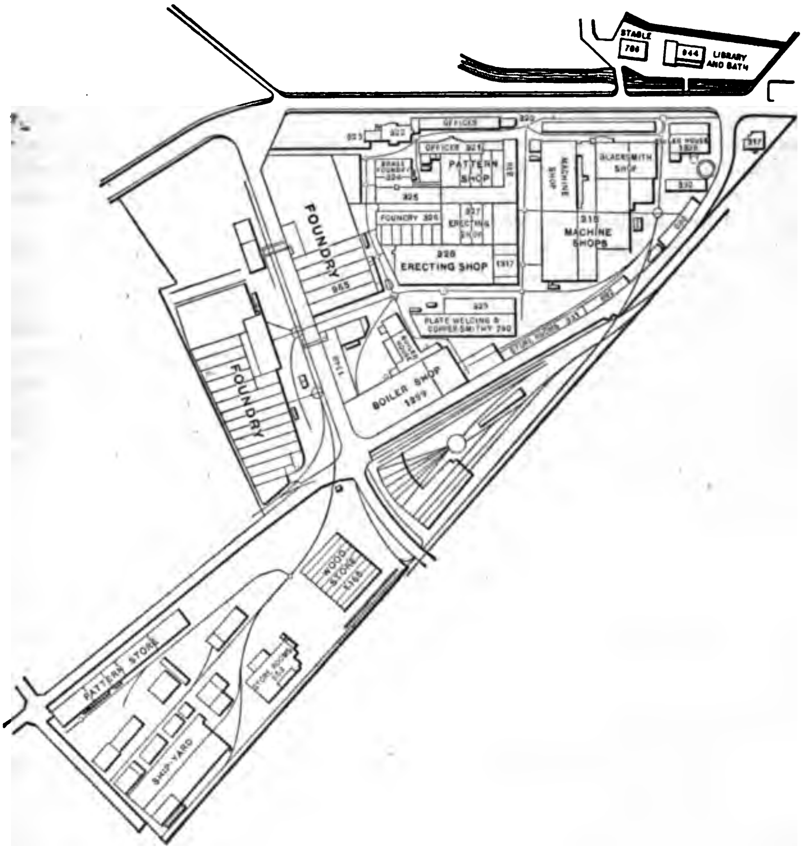

Fig. 262.

Extract from the letter of Mr. Carl Sulzer:

"I send you enclosed two sets of indicator cards (Figs. 258 to 261). The diagrams of all our triple-expansion engines are very much alike, so that these may be regarded as typical.

"As regards drop between the cylinders, we find from theoretical considerations, as well as from our extended experience, that such should be entirely avoided if the very best economy is to be obtained. You will find our diagrams in accordance with this consideration.

"As regards jacket steam, our practice is to pass the working steam first into the jacket and then into the bore of each cylinder in succession. From a good many comparative trials we find this system the best, everything considered. We have formerly tried the heating of all jackets by direct steam, also the heating of tubular receivers, but have found no advantage in so doing. With our present system the jackets are very well drained; there is no chance for air accumulating; the piping and corresponding losses are considerably reduced; the low-pressure cylinders need not be made strong enough to carry boiler pressure; their radiation is reduced, etc.

"As to superheating, we generally do it by means of spiral coils; there is a large variety of designs for the various types of boilers.

"You must not consider the plan of our Winterthur works (Fig. 262), which I enclose, as model works in every respect. They have grown up by degrees, and I feel sure there are many points which could be improved upon if the works were to be built anew. A good many of our latest machine tools have been ordered from America. For special machinery we have a separate drawing office, and have designed and built quite a number of machines and appliances of a special nature which are not in the general market.

"Yours truly,

CARL SULZER."

DISCUSSION.

Mr. Geo. I. Rockwood.—Mr. Hill deserves praise for his enterprise in securing these drawings and data for publication in the *Transactions*, thereby fastening the attention of the engineers of this Society upon the successful practice in steam-engine construction of Messrs. Sulzer Brothers.

The chief difference between these engines and those common with us lies of course in the valves and valve gear employed. That the double-beat poppet valve has remained in the background of American favor is easily explained on other grounds than those of intrinsic merit. Undoubtedly the principal cause of the neglect of the poppet valve in America was the choice of the rotary form of valve by George H. Corliss when he introduced the automatic cut-off principle of controlling the speed of steam engines so widely and so quickly throughout the world. The overshadowing genius of Mr. Corliss as a steam engineer and as a manufacturer of the Corliss wrist-plate gear, which is not applicable to working poppet valves, prevented the growth of any other kind of gear in the United States up to a very recent period.

However, the poppet valve has not been entirely overlooked here. For the past forty years the Putnam Machine Company, of Fitchburg, Massachusetts, have built engines of unsurpassed workmanship, equipped with a very simple and excellent form of poppet valve gear. The double-beat valves differ from those of the Sulzer type in respect of the shape of the seats, which are flat instead of bevelled. Of late years the Nordberg Manufacturing Company of Milwaukee, of which company Mr. B. V. Nordberg of this Society is vice-president and mechanical engineer, has been in the field with a gear almost like that of Sulzer Brothers.

It has seemed to me for some time that no other valve has been produced which is superior in form for dealing with the high pressures now becoming so common with us. That the claim of Messrs. Sulzer Brothers regarding the permanent tightness of the poppet value is true, I know of my own experience. I have yet to find an instance of a cylinder with rotary or slide valves which is as tight under 140 pounds steam pressure as the poppet valve cylinders have been with which I have had to do. Moreover, the assertion is sustained by the very fine records of performance given in connection with the descriptions of these three engines, which could not have been achieved without absolute tightness of valve closure.

Two important novelties to an American engineer are exhibited in the sectional elevation of the upright engine shown in Fig. 253 and Fig. 254. One is the design of the cylinder heads. Possibly there is no difficulty in packing the two annular joints between the upper end of each cylinder with its jacket and the cylinder cover. It is easy to see how the outside joint of the two could be made tight; and under the system of jacketing employed it is of less consequence if a slight leak existed at the inside joint of the low-pressure cylinder, between the jacket and the inside of the cylinder, than would be the case if live steam were contained in the jacket. As it is, there is no danger of getting up boiler pressure on the low-pressure piston with steam on the jacket and the engine shut down. The other novelty of design to which I refer is that of the air pump and the novelty of the method of maintaining the vacuum. This method seems to me an ideal way when there is sufficient head to the water used for condensing purposes.

The first point of interest to note is the remarkable difference in economy between the performance of the engine described on page 810 and that of a Sulzer engine of the same size and run under the same conditions, built two or three years before and tested by Professor Schröter. This test is recorded by Professor Denton on page 1367 of vol. xiv. of the *Transactions*. Its cylinders are, roughly, 20 inches, 30 inches, and 47 inches by 55.2 inches stroke. It ran at a speed of 66.4 revolutions. The steam pressure, however, was only 145 pounds against 168 pounds in this case. The steam was superheated 16 degrees in the case reported by Mr. Hill. The test of this engine gives the water consumption as 12.73 pounds against a performance of 10.75 in the paper. The difference represents a saving, due to superheating and to the use of steam of 25 pounds higher pressure, of 15.6 per cent. But the 18 inches and 44 inches by 72 inches tandem compound engine at the Grosvenor Dale Company's plant ran under the same conditions, roughly, as the engine tested by Professor Schröter. The steam consumption was found by Mr. Barrus to be 12.47 pounds per I. H. P. per hour. This shows that the compound does better than the Sulzer triple expansion when the two are run under conditions which are comparable.

The performances of these three Sulzer engines are extremely good, of course. The engines worked under the very best conditions. They are all big engines, working with tight valves and pistons, extra high steam pressure, moderate speed, efficient, well-balanced jacket action, superheated steam, unusually good degree of vacuum in condenser, and, most important of all, the poppet valve was used. This valve has one considerable advantage over multiported slide valves in that it presents a minimum of condensing area for a given port area.

If Mr. Hill wants to make out a case against the compound engine, he will have to quote tests of the same engine run with and without its intermediate cylinder. Tests of Sulzer triple expansion engines cannot be justly compared with compound engine performance unless the comparative conditions are also carefully weighed. I certainly should not be justified in comparing the results given in the paper with those obtained by Schröter from a compound engine which he tested, finding a steam consumption of but 10.2 pounds. Yet it is a fact that the compound engine has yielded the very least consumption of steam per I. H. P. and per hour of all types of engines which have been tested. This fact signifies less to us when it is considered that the Schmidt engine tested by Schröter was supplied with steam highly superheated.

The fact remains that in the mills of New England there are compound engines at work which are as economical as any triple or higher multiple cylinder mill engine in that region, and if the compound engine could be found which works with tight poppet valves, good jacket action, 170 pounds initial pressure, 28 inches of vacuum in the condenser—in other words, under conditions comparable with the conditions of operation of the Sulzer engine—then I have no doubt that the steam per delivered horse-power per hour would be considerably less than that of the Sulzer, good as that record is.

Prof. D. S. Jacobus.—I think it would be well for Mr. Hill to state authorities for the tests given in the paper. If the tests were made by the engine builders there is a feeling with many of us that there is a tendency in human nature to get them too low. As Mr. Rockwood has said, a test on one of the Sulzer engines made a few years ago by Professor Schröter gave a steam consumption of 12.73 pounds.

In 1891 Professor Denton made a comparison of compound and triple engines. Taking the consumption of the compound engine at 13.6, and comparing it with the triple engine having a consumption of 12.45 pounds, he showed that if we consider the difference of capital investment and depreciation, the difference was only 2.3 per cent. in favor of the triple for a plant run 10 hours a day and 300 days per year. These results were presented at the Washington meeting of the American Association for the Advancement of Science. It was also shown that the difference in favor of the compound in regard to capital investment, etc., amounted to 7 per cent. of the cost of the coal at $4 per ton.

If we make the same comparison, taking the figures given in the paper and the figures now claimed for compound engines, which have also been brought down about one pound during the last few years, we will see that the comparative results are about the same as when the problem was worked out by Professor Denton.

Let us consider the figures in the tables given in the paper. The average consumption of the first two engines is 11.5 pounds per hour per horse-power. Now, if we add the 7 per cent. to allow for the difference in the capital investment, etc., the figure becomes 12.3 pounds. A compound engine consuming 12.3 pounds would, therefore, give the same economy as the triple engine consuming 11.5 pounds per hour per horse-power. The figure of 12.3 pounds has been attained in compound engines. For example, in the case of the Louisville engine, tested by Mr. Dean and reported to this Society at one of the previous meetings, the consumption was 12.16 pounds. Mr. Rockwood has also obtained figures in the neighborhood of 12 pounds and lower. The figures which Mr. Rockwood has just given for a compound engine tested by Professor Schröter were obtained with highly superheated steam, and are, therefore, not directly comparable with those obtained with steam not so superheated.

Mr. H. H. Suplee.—I do not wish to discuss the engines; but it was my privilege a little over a year ago to make a visit to these works of Messrs. Sulzer at Winterthur and to be shown through the establishment by Mr. Carl Sulzer, and I could not help admiring the beautiful workmanship put upon their products. The establishment had been recommended to me as acknowledged to be the finest engine-building works on the continent, and certainly that opinion was borne out by what I saw of this establishment. It is mentioned in the paper that many of the tools in the shop are of American make, and I observed also that many of the remainder were European copies of American tools. I think many of the tools came from this city of Hartford. It is very probable that the fine workmanship put on all of Messrs. Sulzer's work has something to do with the high efficiency of these engines.

Prof. R. H. Thurston.—It may be interesting to place on the record, besides these figures for the great engines of Sulzer Brothers, the accompanying set of data from the little engines of Schmidt, as recently sent me from abroad. The details of the trials which have given these results may be found in the *Zeitschrift des Vereines Deutscher Ingenieure*, Band xxxx. The economy of these engines would be several per cent. greater, presumably, were they reproduced on the large scale of the Sulzer engines. This fact is indicated in the table by differences there to be noted between the smaller and the larger sizes reported upon. The gain by superheating is seen, further, to vary greatly with size of engine also, which simply means that the gain is the greater as the cylinder condensation which it is intended to reduce, and hence as its opportunity to produce marked economy, is the greater. In the case of the Sulzer engines superheating seems to have been very moderate, but in that case comparatively little is required to check the internal wastes, which must be quite small in jacketed engines of that size. Effective superheating, in a degree proportioned to the amount of internal waste by condensation, is seen to tend to bring all sizes of engine to a common and high degree of efficiency.

These two sets of figures, as supplied from the Sulzer and from the Schmidt engines, may be taken, I think, as representative of the best work done in Europe to-day.

It may, perhaps, not be out of place to observe that some knowledge of the degree of accuracy of the work performed at the engine trial is necessary to enable one to judge precisely how much credit is to be given for figures which are so extraordinary. While there is no obvious reason for discounting them, it is the fact that every member of the profession is likely to desire the most exact and minute statement of the methods adopted, particularly in weighing the steam used and in calibrating the indicators. The uniformity of the figures secured, as reported, from so many engines, is an indication either of accuracy or of a constant source of error in one or the other, or both of these particulars. The high standard of work is precisely what we should expect of the firm building the engines, and the figures are those which should be expected as those of maximum efficiency, judging from the experience of the best designers and constructors at lower steam pressures. The advances now in progress seem to be mainly, if not altogether, due to the adoption of higher pressures than formerly. The proportions of engine and the speed of piston are practically the same with good builders on both sides the Atlantic. Steam jacketing is more common in this field of work than with us, and superheating is more generally in use and is carried to a greater degree.

Taking the record in this country for the triple-expansion engine operating at usual pressures, as 125 pounds or thereabout, as held by the Milwaukee Pumping Engine, and making that performance our standard for comparison, we should, with increasing pressures, obtain reduced expenditures of dry steam in proportion, very nearly at least to the quantity

$$W = a / \log p,$$

in which, for that case, we have $a = 25$, nearly. On this basis the consumption of steam, dry and saturated, or very slightly superheated, at higher pressures (absolute), should be :

STEAM CONSUMPTION FOR HIGH PRESSURES.

p.	*W.*	*p.*	*W.*	*p.*	*W.*
100	12.5	150	11.52	200	10.81
110	12.27	160	11.42	225	10.64
120	11.9	170	11.21	250	10.46
130	11.85	180	11.11	275	10.28
140	11.68	190	11.10	300	10.12

The ideal engine gives two-thirds these values, or a trifle over, and effective superheating should reduce them to values intermediate between those of the above table and those for the ideal case. The tabulated figures have been reduced, as already seen, by Schmidt, in this manner, by about ten per cent. on small engines; and still better work should be possible with such very large engines as those taken for study in this paper. The Milwaukee engine, reproduced on a double scale of indicated power, would bring them down about ten per cent., without superheating further than is required to bring the steam to the cylinder dry. Making all allowances for differences in size and in condition of the working fluid as to pressure and temperature, it is interesting to observe that our most successful designers, on both sides the Atlantic, are securing very nearly equal, and exceedingly remarkable and gratifying, results in the raising of the working efficiency of the steam engine.

In the reduction of data of this class to a common standard for comparison, I have been accustomed to employ the system illustrated in the accompanying diagram.

Let the curves shown, *AB*, *CD*, *EF*, *GH*, *IJ* (Fig. 263), respectively, be the graphic expression of the quantities of steam per horse-power per hour for such a temperature of feed water and total heat supply as may be found best suited to the case. Here they are constructed for the "ideal" case, for the real case exhibiting 25 per cent. extra-thermodynamic wastes, and for 50, 75, and 100 per cent., added demand for steam, each showing the variation of the total quantity with increasing pressures, as easily computed by the now familiar methods of our later practice. In this particular case the abscissas are taken as representing with approximate accuracy both pounds of steam and thousands of B.T.U.—an assumption which will answer present purposes very well, and quite satisfactorily for most practical purposes, as the two standards do not vary very greatly within ordinary working pressures. Reduce the reported results of trials, for the engines to be compared, to a common standard of this kind, and enter them on the diagram, each in its proper place, as shown roughly in this small figure. The greater the accuracy demanded, the larger should be the scale of the drawing; but I have used, for this form of record, a sheet of the usual size of the common larger section papers.

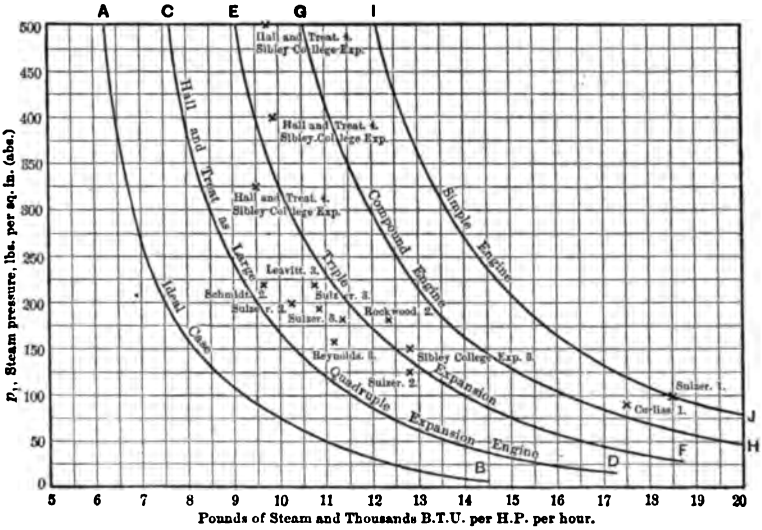

HM

STEAM ENGINE EFFICIENCY CURVES.

Rankine Cycles. p_1 p_2, variable—$p_3 = 1$.– Pressures, absolute.

Condensing Engines.

FIG. 263.

This being done, it is seen at a glance how the several engines, or types of engine, compared as thermodynamic apparatus. That which gives a point on the diagram nearest the ideal curve, measured horizontally, is the most perfect heat engine. When comparing engines employing superheated steam, it is necessary, for a true comparison, to reduce the consumption of steam

	100 H.-P. ENGINE FOR THE PAPER FACTORY OF F. H. SCHOELLER IN BURG OF GRETESCH AT OSNABRÜCK.					17 H.-P. ENG. FOR THE PAULINUS PRINTING WORKS AT TRIER.		60 H.-P. ENG. FOR KRUPP'S C'T-ST'L WKS. AT ANNEN.	20 H.-P. EN. FOR TOOL WKS. OF MR. PESEHKE AT ZWEIBRUCKEN.		100 H.-P. ENG. FOR THE OETRINGEN MINE, STUMM BROS., NEUKIRCHEN.			90 H.-P. ENGINE FOR TILE WKS. BERBACH.	30 H.-P. ENGINE FOR KORTING BROS., PARIS.			
Trial	I. 19.12.96	II. 20.12.96	III. 21.12.96	IV. 21.12.96	V. 26.8.96	VI. 13.12.94	VII. 14.12.94	VIII. 24.1.96	IX. 8.1.96	X. 9.1.96	XI.	XII.	XIII.	XIV.	XV.	XVI.	XVII.	XVIII.
System	Schmidt's Componnd Condensing Engine.					Schmidt Single Horizont'l Eng.		Schmidt Comp. E.	Vert. D'ble-Act'g High-Speed Eng.		Horizontal Double-Acting Comp'nd Eng.			Hor. D'ble-Act. Single Cyl'r Eng.	Horizontal Single Cylinder Gobel Engine.			
Diam. of Cylinders, in.	H. 10.62 L. 19.68	Trial with, after superheating.	Low-pressure cylinder, not heated.	Low-pressure cylinder, heated.	Second test, after half year running.	7.07	......	H. 8.65 L. 15.73	9.85	......	H. 12.8 L. 20.48	......	......	16.72	9.85			
Stroke " "	19.68					11.8	......	13.78	6.3	......	23.6	......	......	31.5	15.75			
Revolutions per Minute	140					200	......	175	250	......	125	Low-press. disconnect'd eng. w'king with high-press. alone.		85	200			
Allowable W'k'g Press.	176.5					132	......	176.5	117.5 with	...... with't superheat'g.	117.5 with superheat.	with't	with superheat'g.	96	176.5	176.5	88.2	88.2
Durat'n of Test, hrs. m.	4-15	4-28	2-42	4-4	8-11	8	8	6-17	8	8	6-7	7-66	......	7-31	1-40	2	1-30	1-30
Aver. Steam Press., lbs.	165	165	112.5	112	168	127	120.2	159	109	106	93.6	114	......	95	110	117.5	77.5	80
Temperature of Saturated Steam, °F	370	370	342	342	......	353	352	367	342	340	331	343	......	332	342	345	320	349
Temperature of Superheated Steam, °F	677	637	684	677	617	690	667	647	572	......	582	......	......	530	618	568		
Average I. H.-P.	111.73	120.59	73.12	72.59	118.25	22.84	22.68	69.68	16.8	14.9	27.35	27.75	......	65.87	21.75	34.6	20	34
" D. H.-P.	102.54	111.3	66.29	66.3	?	18.62	18.58	61.54	?	?	?	?	......	?	20.4	32.4	16	32.2
Mechanical Efficiency	.917	.923	.907	.909	?	.816	.819	.886	?	?	?	?	......	?	.938	.935	.80	.947
Steam Consump'n per																		
I. H.-P. per hr., lbs.	10.6	10.41	10.7	11.25	11	14.81	14.81	9.55	19.2	3.9	23.2	35.3	......	21.4	21.16	17.8	38.2	30.4
D. H.-P. " "	11.52	11.3	11.8	12.4	?	18.2	18.1	10.8	?	?	?	?	......	?				
Coal Consump'n per																		
I. H.-P. per hr., lbs.	1.69	1.70	1.81	1.81	......	2.6	2.42	1.5	2.76	5.95	3.07	5.6	......	3.51				
D. H.-P " "	1.84	1.98	1.93	1.99	?	3.08	2.87	1.7	?	?	?	?	......	?				
Evapor'n per lb. of Coal from and at 212° F	8.56	8.22	8.11	8.55	8.76	7.1	8.21	....	8.3	......	7.57	9.21	......	7.62				

reported to the equivalent in dry and saturated vapor under the assumed standard conditions. I have placed on this chart the values for the Sulzer engines here reported and also previous figures for the same make of machine, as well as several other "record breakers." The numerals attached to each indicate the number of cylinders in series.

Mr. Hamilton A. Hill.[*]—In introducing these interesting reports of the performance of Sulzer engines to the notice of the Society my main object was to call attention to the question of triple versus plain compound engines in mill practice, realizing that there is a strong belief in the minds of many of our engineers that for mill purposes there is no advantage in the former over the latter. This belief finds expression in the discussions on this article. But the facts, outside some few tests in New England, do not seem to warrant this view. In pumping-station work, certainly there seems to be a very decided saving through the use of the triple form of engine. The Louisville engine referred to by Professor Jacobus as tested by Mr. Dean, giving 12.16 pounds, shows a large loss as compared with the Brookline pumping engine which was tested by the Institute of Technology with a result of 11.22 pounds of steam. The best result of these Sulzer engines here reported 10.71. Compared with even the extraordinary report by Mr. Barrus on the Grosvenor Dale compound engine of 12.45 of which Mr. Rockwood speaks, fuel at $4 per ton would give a saving of $2,500 to $3,000 per year.

To get the direct opinion of perhaps the people of the largest experience in stationary practice in the world, I put the question directly to Messrs. Sulzer, and they answered as follows:

> "DEAR MR. HILL:
>
> "Replying to your valued favor of May 29th, we find a difference of one kilogram (2.20 pounds) of steam consumption between compounds and triples of the larger sizes per horse-power hour, everything else being alike. The boiler plant may be correspondingly reduced.
>
> "It is, of course, a question of a more expensive plant on one side and a more expensive coal bill on the other. This question must be treated individually. Where coal is not very expensive a compound will be preferable. But in Switzerland, for instance, or in large portions of Germany, Russia, Austria, the conditions are such that the most economical engine is in reality the cheapest."

Referring to the suggestion of Professor Jacobus in regard to "authorities for the tests given in this paper," it appears

---

[*] Author's closure, under the Rules.

by the original German reports that the two first, König, Jr., and Morosoff's Son, are translations from the *Zeitschrift des Vereines Deutscher Ingenieure*, Band xxxx.—the same to which Professor Thurston refers for his report on the engines of Schmidt. The latter test, that of Solbrig Sons, is as stated in the translation from the reports of the Saxon Boiler Inspection Co., office in Chemnitz, Saxony.

DCCXXXVI.*

A POCKET RECORDER FOR TESTS OF MATERIALS.

BY GUS. C. HENNING, NEW YORK CITY.
(Member of the Society.)

MANY devices have been designed for recording stress-strain diagrams, showing the behavior and general characteristics and quality of materials, ranging in price from $200 to $2,000; each, however, usually designed for special work, or, more generally, for a particular machine. Their number is almost innumerable. I may mention as among the best those of Wicksteed, Gray, Unwin, Barr, Mohr & Federhoff, Olsen, Riehlé, and many others. They are, however, rather for checking results than for reliance upon their cards.

Not one of them can be transported and used on machines other than that for which built, and even where kept in order they cannot be used readily, causing considerable loss of time in adjustment and corrections for errors. The instrument which I am about to describe is one designed to be used on any and all machines which have a running poise weight, without causing delay for adjustment, the results at the same time being reliable, and such that they can be at once interpreted. Therefore the instrument must be flexible in its application, equally handy for large and small test pieces, whether round, square, or of other section, and the scale of diagram must be at once adjustable to the work to be done. It must, in fact, be as universally applicable as a steam-engine indicator, and be so easy of application and interpretation that any intelligent person can use it without a long course of instruction.

It must be portable and compact, requiring no extra precautions in adjustment or regulation; and, without having the accuracy of an instrument of precision, must be perfectly reliable, and as correct as the other apparatus in connection with which it is used. It must cover a wide range of work of short

---

* Presented at the Hartford meeting (May, 1897) of the American Society of Mechanical Engineers, and forming part of Volume XVIII. of the *Transactions*.

and long, large and small test-pieces, such as are found in general use, and must be applicable to hard and soft materials as well.

Moreover, it should give a complete record from beginning to end of test, and the more important elements on an enlarged, and the lesser on a natural scale. Thus, while elongations within the elastic limit are very minute and must be recorded on a magnified scale which is reliable, changes of length beyond this critical point are very large, rapid, and variable; hence measurement with a steel scale suffices, and the record on a diagram may be on actual scale. This change of scale must, however, be positive, controllable, and at a fixed instant or point, and must not introduce errors in the record.

In case of materials of slight extensibility, however, the entire record should be on one scale from beginning to end, and the instrument should be so attached that it does not nick or injure the material so as to affect its point of rupture or strength.

As materials under test change shape rapidly and constantly, the instrument must be so designed that this variation does not introduce errors by slipping or tilting or otherwise.

Means must be readily applicable which will check the accuracy of the instrument at all times. If an instrument fulfilling all of these conditions can really be constructed at a reasonable price, it seems that its general introduction in the kit of every engineer who has to deal with the strength of materials would be an easy task, and once its usefulness is demonstrated it would become a necessary adjunct in all work, especially as it does not increase the cost.

As materials are generally tested at the present time, there is no lasting record of the qualities that are claimed to have been found, and a test cannot be repeated upon the same piece of material. Moreover, it is well known that many properties of materials cannot be determined except by an autographic stress-strain diagram. The curves obtained vary according to the treatment which the material has been subjected to, and annealing or straining produces such marked results that an autographic record would at once indicate how the material has been treated. Hardening, cold rolling, tempering, and other processes are made apparent by the characteristic features of the curves.

With the use of such recorder it would become instantly

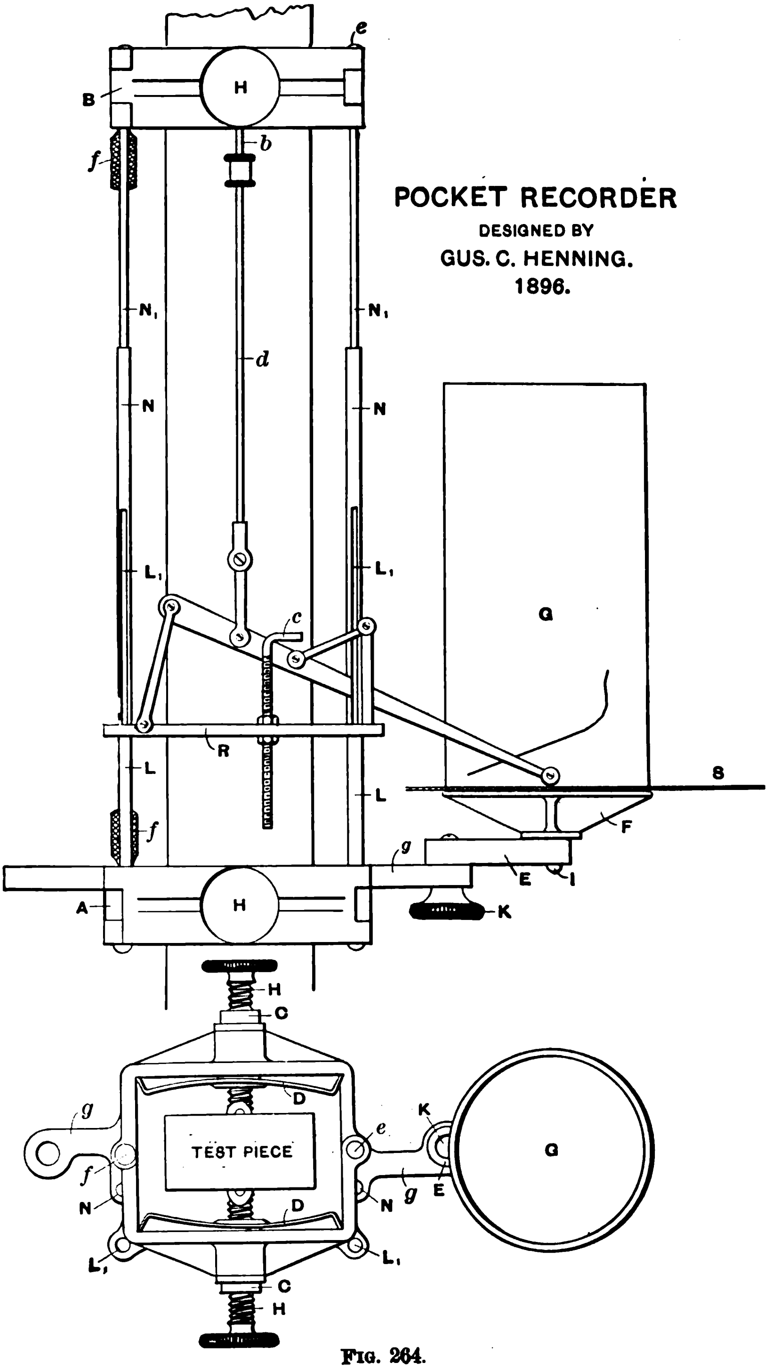
POCKET RECORDER
DESIGNED BY
GUS. C. HENNING.
1896.
e
B
H
b
f
N₁
N₁
d
N
N
L₁
L₁
c
G
R
L
L
S
f
F
g
E
I
A
H
K
H
C
D
g
TEST PIECE
e
K
G
f
N
N
g
E
D
L₁
L₁
C
H

Fig. 264.

apparent whether material had been previously intentionally strained to raise the elastic limit, as is well known to have been done. Overheating of material would be clearly indicated by the change in the curve, and the general uniformity of any lot of material could be readily determined.

When it is further stated that the apparatus is equally applicable for compression tests and that it can be used equally well in a horizontal or vertical position, its general usefulness will become apparent. A number of diagrams obtained by this instrument are added, and will show plainly the wide range which its use covers.

Fig. 275.

There are curves (Figs. 268, etc.) of No. 6 wire, 12 inches long, of 200,000 pounds tenacity and 6 per cent. elongation; of $\frac{7}{8}$ inch rivet rods, annealed and unannealed, 8 inches long; of structural steel, 1½ inches × ½ inch, showing a strength of 70,000 pounds and elongation of 34 per cent., and of hard drawn copper.

In every case the elastic limit and yield point, as well as maximum load, and load at breaking point, are clearly defined, and the question of where or what are elastic limit and yield point is at once settled. The curves also allow the accurate determination of the (E) modulus of elasticity, which is a most valuable factor, but rarely determined, because very difficult to obtain with any degree of precision, also requiring great care, much patience, time, and a careful observer.

There is another use to which this instrument can be put: it is to act as a check or controller upon the actions of the person charged with operating the testing machine, who is generally sufficiently familiar with the material made at his works to be able to "jockey" the machine so that the material apparently gives results which fill specification requirement.

Another possibility is that cheaper men may be engaged to make tests of materials than is now the custom, when accurate results are desired, for the actual production of a record of test will become a clerical matter rather than the work of an expert, the records being all interpreted by the expert or chief engineer who remains in his office. The apparatus (Figs. 264 and 275) consists of two hinged symmetrical frames *A* and *B* (Fig. 265), which surround the test-piece and are attached to it automatically at the standard gauge length. The frames are hinged by taper pins and plugs *e* and *f*, and are provided at the centre of opposite sides with spring cushioned bushes *C*; these bushes are nicely fitted to the holes in the frames, and are allowed to move forward and back by the play of the springs *D*. Through these bushes, screws *H*, with hardened ends shaped like knife-edges, pass. The frames are provided, one with rods N_1, the other with tubes *N* fitting the latter, so that one frame steadies the other (Fig. 266). These rods are of proper length to keep the frames a certain distance apart in order that the knife-edge screws bear on the test-piece at fixed lengths. These rods allow ready motion of either frame in the direction of axis of test-piece. The frame *A* has two arms *g*, one on either side, for carrying the wheel *F* and drum *G*, either on the right or the left (Fig. 267). The wheel *F* is, however, connected to *g* by the link *E* and screw *K*, so that it can swing to and from the marking point at will. This wheel *F* revolves freely about the stud *I* carried by *E*.

The frame *A* carries another most important member, a parallel motion, such as is found on any steam engine indicator; this mechanism rests on a bar *R*, carrying two tubes *L*, which slide nicely on two rods L_1 screwed into the frame *A* at *a*, and is operated by a connecting rod '*d*' secured to frame *B* at '*b*.'

This bar also carries on its upper side a hooked rod *c*, which is adjustable and which hooks over one of the levers of the

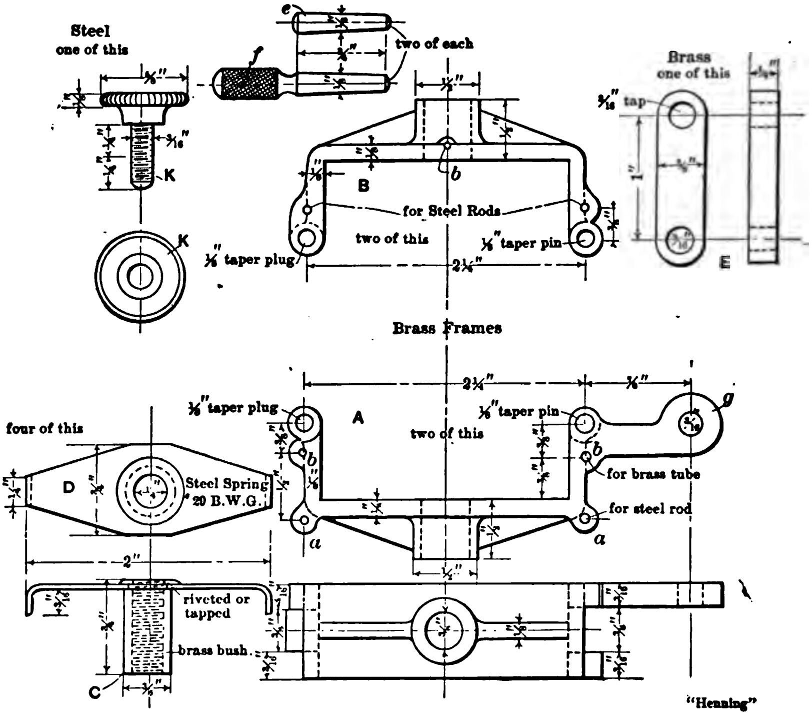

FIG. 265.

parallel motion when it has reached any desired position. The marking point of this motion touches the paper wrapped around the drum *G*; the latter is revolved by a string *S* lapped around it, one end being tied to the poise weight on the beam, the other carrying a small balance weight. The string, of course, passes over conveniently located pulleys, to be properly guided.

APPLICATION.

The screws *H* are advanced so that their ends are separated by a distance equal to the diameter of test-piece less about

$\frac{1}{16}$ inch; a sheet of paper is wrapped around the drum and held in place by rubber bands or clamps; the frames *A* and *B* are then opened and placed around the test-piece, and *A* is closed, dropping plug *f* into place; this operation holds the instrument in place. Now the upper frame *B* is closed in the same manner. This attaches the instrument on test-piece at the gauge length. Now the string is tied to poise and balance weight, is then wrapped around the drum once, the drum is turned slightly so that the pencil of parallel motion bears against the paper, and the instrument is ready for work.

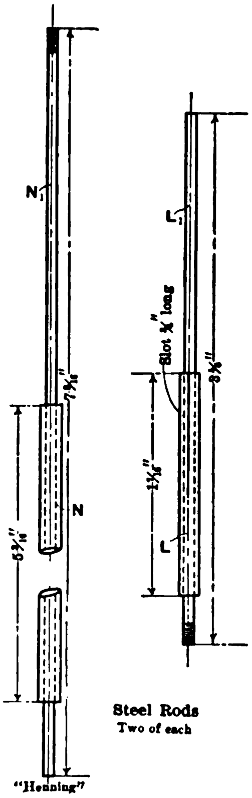

FIG. 266.

To show that the stretch of the string does not introduce measurable errors, a piece of the string used, 4 feet long, was loaded with various weights running up to 24½ ounces.

The stretch of the string under these loads was as follows:

2¾ = .085
5 = .165
7¾ = .260
18½ = .360
16¼ = .430
24 = .620

Then, after stretching and releasing the string repeatedly, the stretch was always uniformly ¼ inch for 7 ounces load on the 4-foot string; hence, as the load on the string is about 2 ounces at most, the total initial stretch of 4 feet of the string would be 0.07 inch. And as the variation of load on string is never over ½ ounce, this previous stretch varies less than $\frac{1}{100}$ inch, or within the limits of accuracy of instrument even when a load of 75,000 pounds on a 100,000 pounds machine is weighed. As most readings are within this limit it must be conceded that the stretch of the string does not introduce any errors which will at all affect the accuracy or usefulness of the instrument. If, however, a fine steel wire is used, it will be found that the scale of loads will be entirely free from error. Proof of this is given in explanation of diagrams.

To *mark off the scale for load,* the poise is advanced, and for every 1,000 pound mark reached on the beam, a mark is made on the paper on the drum. As the tension on the string is always constant, being regulated by the balance weight, the string, being of the stretchless kind, retains an exact length, as is demonstrated by the scales laid off on the diagrams. The line thus drawn on the drum serves as a zero or base line;

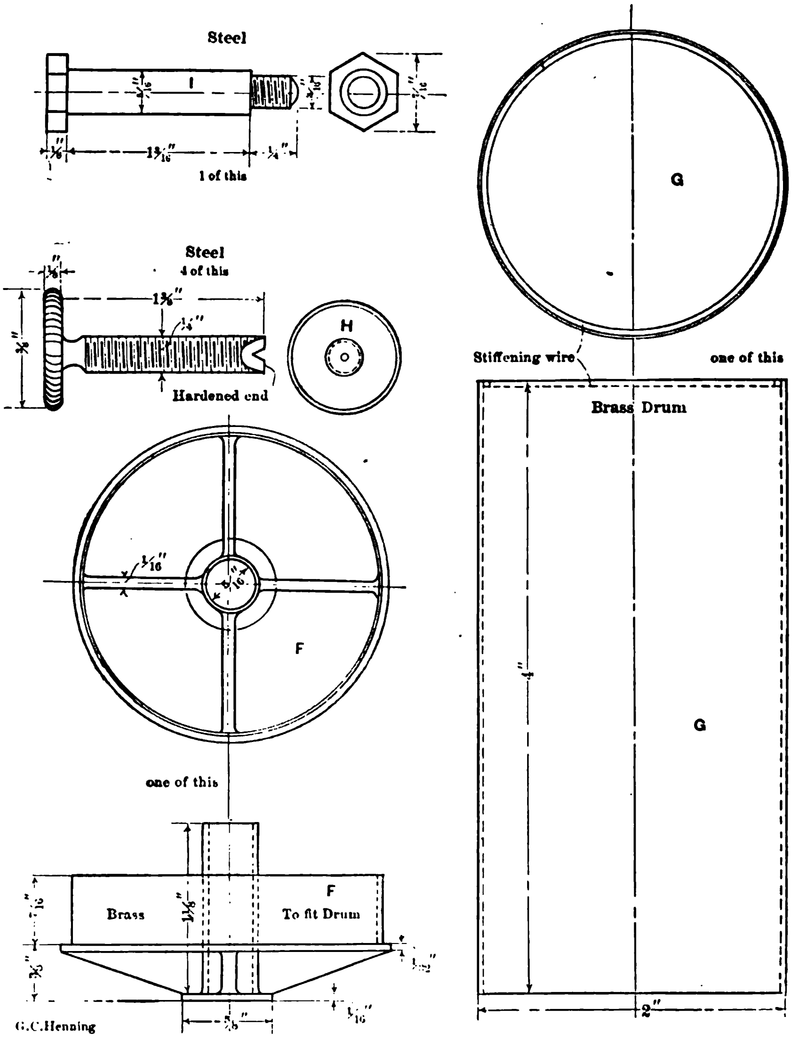

Fig. 267.

another is drawn at right angles to it by running the marker up and down.

Now the test can proceed, and the only precaution necessary is to keep the weighing beam exactly at its central or floating position throughout the test.

When the material has stretched somewhat, a sudden change of stretch will be observed, very soon followed by a much more rapid change. The first change indicates the "elastic limit"; the second, the "yield point." Supposing that the material is a hard one, with very little deformation before rupture, the whole curve is drawn out on the magnified scale. Should the material be iron, steel, copper, or other highly extensible material, then to record the stretch to the breaking point would require a very long drum; in the case of a rod of steel 8 inches long with 30 per cent. stretch this would require a drum 12 inches long and more, and a parallel motion which would be very large, clumsy, and expensive. As a result the apparatus would be unwieldy and almost impossible to use. Moreover, the elongation up to yield point alone need be determined with great accuracy, and as the permanent elongation is never measured closer than is possible with a steel scale, it need not be recorded with greater nicety. Now, as the stretch of all structural material up to the yield point is always less than $\frac{1}{10}$ inch on an 8-inch length, the hooked rod *C* is so adjusted that at the instant of $\frac{1}{10}$-inch stretch it arrests the parallel motion, and causing it to slide as a unit on the rods L_1. As the parallel motion multiplies 10 times this stretch will be recorded as 1 inch on the paper. After this instant all further stretch is recorded, actual or natural scale. Hence, to measure the total elongation at instant of rupture, all that is necessary is to measure the elongation as shown on the record and deduct $\frac{9}{10}$ inch from it. This arrangement makes it possible to record all tests on a drum 4 inches high.

The drum chosen in this apparatus has a diameter of about 2 inches, or a length of circumference of 6½ inches. If a longer record is desirable the drum is allowed to revolve as often as necessary or a larger drum is used, the curves then being continuous around the drum.

As the weighing beams on testing machines are generally 50 inches long, this would require 8 revolutions of drum for 100,000 pounds load; however, in ordinary testing, loads do not usually

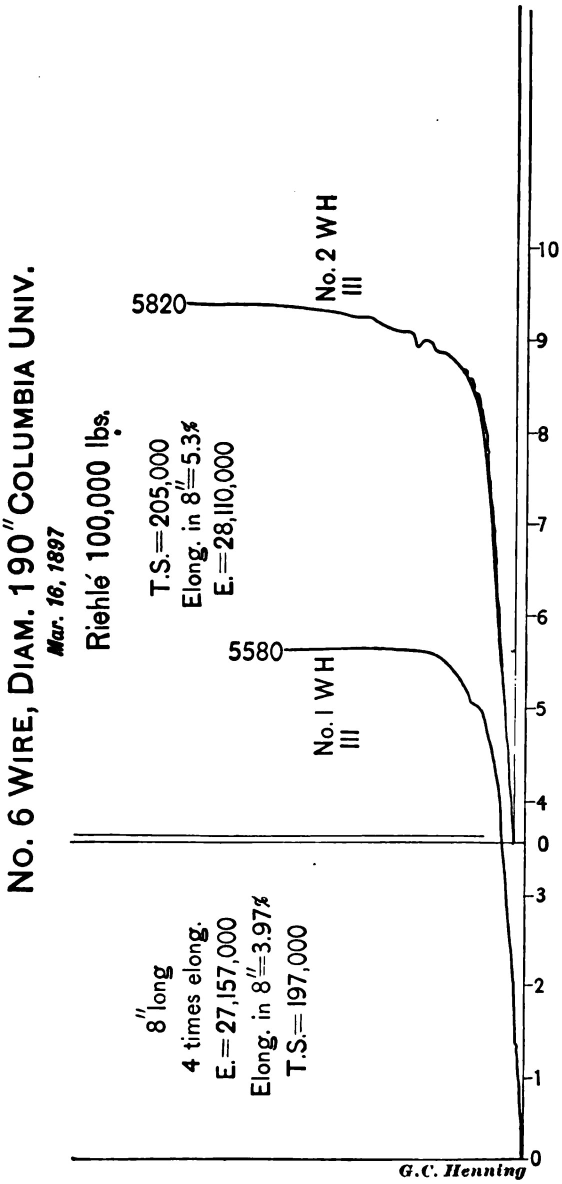
No. 6 Wire, Diam. 190" Columbia Univ.
Mar. 16, 1897
Riehlé 100,000 lbs.
T.S.=205,000
Elong. in 8"=5.3%
E.=28,110,000
5820
No. 2 W H
III
5580
No. 1 W H
III
8" long
4 times elong.
E.=27,157,000
Elong. in 8"=3.97%
T.S.=197,000
10
9
8
7
6
5
4
0
3
2
1
0
G.C. Henning

FIG. 268.

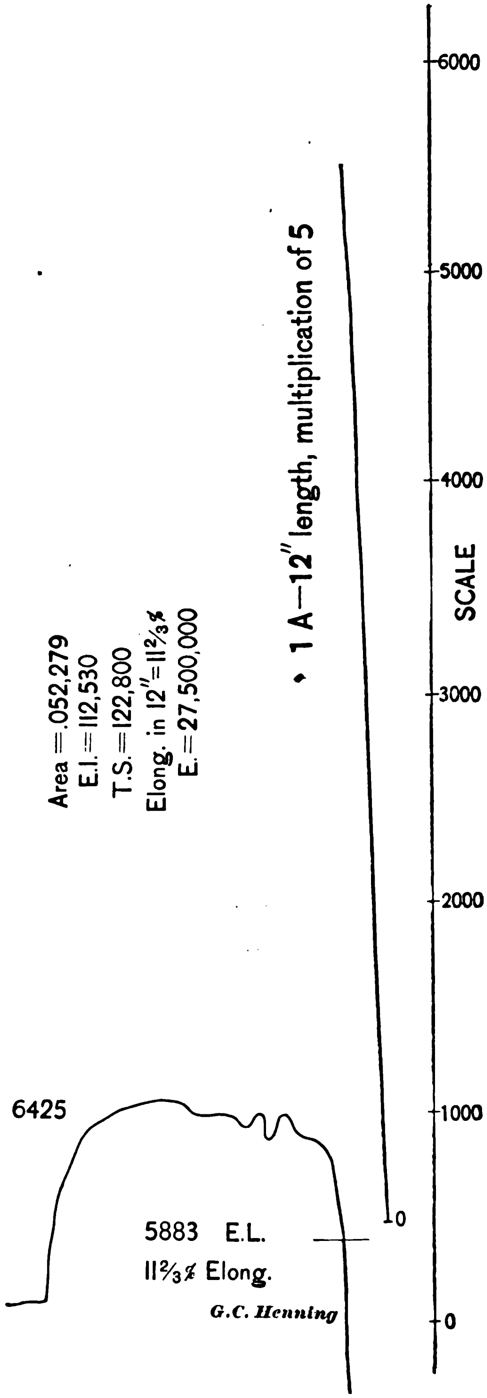
Area =.052,279
E.I. =112,530
T.S.=122,800
Elong. in 12"=11⅔%
E.=27,500,000
1 A—12" length, multiplication of 5
SCALE
6000
5000
4000
3000
2000
1000
0
6425
5883 E.L.
11⅔% Elong.
G.C. Henning
0

FIG. 269.

exceed 50,000 pounds, corresponding to a travel of poise of about 25 inches, or 4 revolutions of a 2 inch drum. As this is still too large the motion is reduced by a set of very light pulleys, over which the string runs a proper number of times to obtain the desired length of diagram.

When the test-piece breaks, the instrument separates into two parts, thereby preventing any injury to it. The rods N_1 and L_1 simply draw out of the tubes N and L, while the parallel motion remains suspended from the upper frame by the connecting rod. The parts are all so light that even considerable shock will not injure them; the knife-edges also allow a small amount of slip on the test-piece at instant of rupture, and this also protects the instrument.

It is, however, important to take one precaution to avoid injury at instant of rupture, viz.: the gripping wedges must be blocked, so that they cannot fly out of place and allow the parts of the test-piece to do likewise.

It will be noticed that the instrument is exceedingly compact; that the parallel motion is immediately adjacent to the test-piece, and that hence distortion of the frame will produce only a minimum error. The parallel motion also is so light, and requires such a very slight force to move it, that this cannot produce errors, especially as this force is constant for all positions of the marking point.

Should it be desirable to use the instrument on longer test-pieces, such as wire, usually tested in 12-inch length, it simply becomes necessary to substitute a longer connecting rod to actuate the parallel motion.

For recording compression tests it is only necessary to substitute a shorter connecting rod, so that the marking point will stand at the top of the drum at the beginning of the test, instead of at the bottom, as shown.

Again, should it be desirable to make alternating compression and tension tests, it only becomes necessary to use a connecting rod which will set the marking point at the middle of the drum instead of either the top or bottom. No other preparations or precautions are necessary.

Card 1 (Fig. 268) gives the record of two No. 6 wires, elongation multiplied 4 times, length of test-piece 8 inches; loads equal actual travel of poise on beam.

Card 2 (Fig. 269) gives the record of a No. 3 wire, elongation multiplied 5 times, length of test-piece 12 inches; loads equal actual 2¼ times travel of poise on beam.

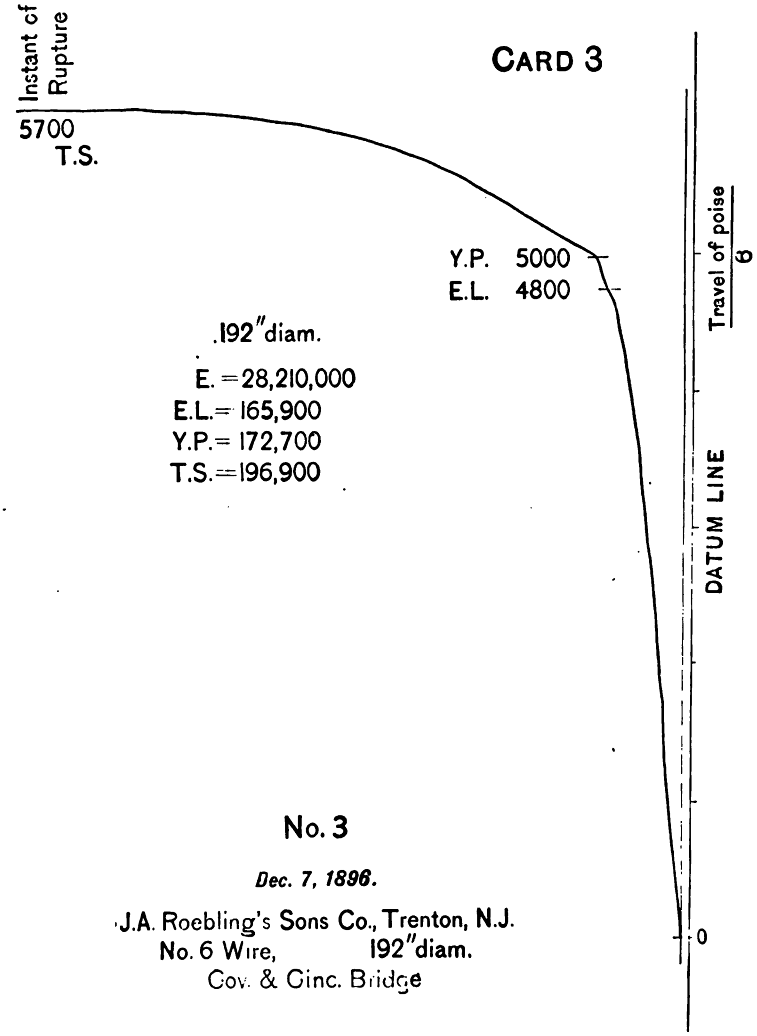

FIG. 270.

Card 3 (Fig. 270) gives the record of test of a No. 6 wire, in which the travel of the poise on the beam of a 10,000-pound machine is reduced to ⅙; the elongation to rupture being multiplied by 5.

Card 4 (Fig. 271) gives the record of two hard drawn copper

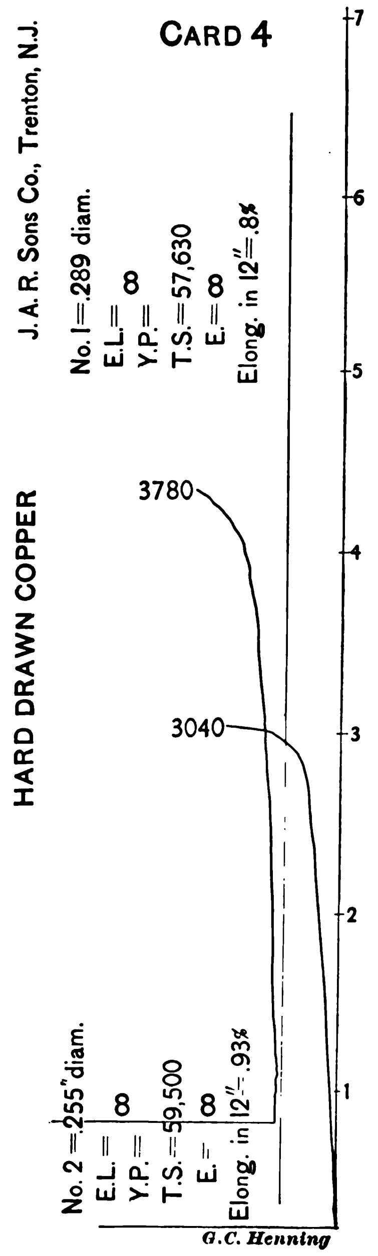
HARD DRAWN COPPER
J. A. R. Sons Co., Trenton, N.J.
CARD 4
No. 1 = .289 diam.
E.L. = 8
Y.P. = 8
T.S. = 57,630
E. = 8
Elong. in 12" = .8%
3780
3040
No. 2 = .255" diam.
E.L. = 8
Y.P. = 8
T.S. = 59,500
E. = 8
Elong. in 12" = .93%
1
2
3
4
5
6
7
G.C. Henning

FIG. 271.

wires, Nos. 1 and 2, 12-inch length, extension to rupture multiplied by 5.

Card 5 (Fig. 272) is of a piece of structural steel 1½ × ½ inch, 8 inches long, elongation multiplied by 4 up to a length of .095 inch; after that record is natural scale, after point "*a*" to rupture.

Card 6 (Fig. 273) is of ⅞-inch rod, rivet steel, 8 inches long, not annealed, elongation multiplied 5 times to point "*a*," or .146 inch; after that point record is on natural scale to rupture.

Card 7 (Fig. 274) is of same steel, but annealed; all other facts same as in Card 6.

It will be seen that all cards except No. 6 (Fig. 273) have the scale of weights marked on them, and the uniformity of divisions will be readily seen.

To give a better idea of this regularity, the spaces on Cards 5 and 7 have been measured and found to be as follows:

In Card 5—

0 – 10,000 = 4.89	inches,	or 2,045	pounds	per	inch.
10 – 20,000 = 4.92	"	" 2,032	"	"	"
20 – 30,000 = 4.95	"	" 2,020	"	"	"
30 – 40,000 = 4.98	"	" 2,008	"	"	"

In Card 7—

0 – 10,000 = 4.90	inches,	or 2,040	pounds	per	square	inch.
10 – 20,000 = 4.93	"	" 2,022	"	"	"	"
20 – 30,000 = 4.96	"	" 2,016	"	"	"	"
30 – 40,000 = 4.99	"	" 2,004	"	"	"	"

It will be seen that these differences are entirely negligible, being much smaller than errors of any testing machine. However, this error can be readily explained, as it is due solely to the fact that the drum has revolved several times, each time adding .03 inch, on account of the increased diameter due to two thicknesses of paper, at the lap. If the diagram had been drawn on one revolution of the drum, even these small errors would have been eliminated.

As the scales of weight on Cards 1, 2, and 4 are thus drawn, and as No. 3 is drawn so that the travel of poise is reduced to ¼, while that of No. 2 is multiplied by 2½; and as the scales are correct in every case, there can be no question of general accuracy of indications of weight or stress applied as recorded.

The accuracy of record of elongations can be established by attaching the instrument to a micrometer and then obtaining a

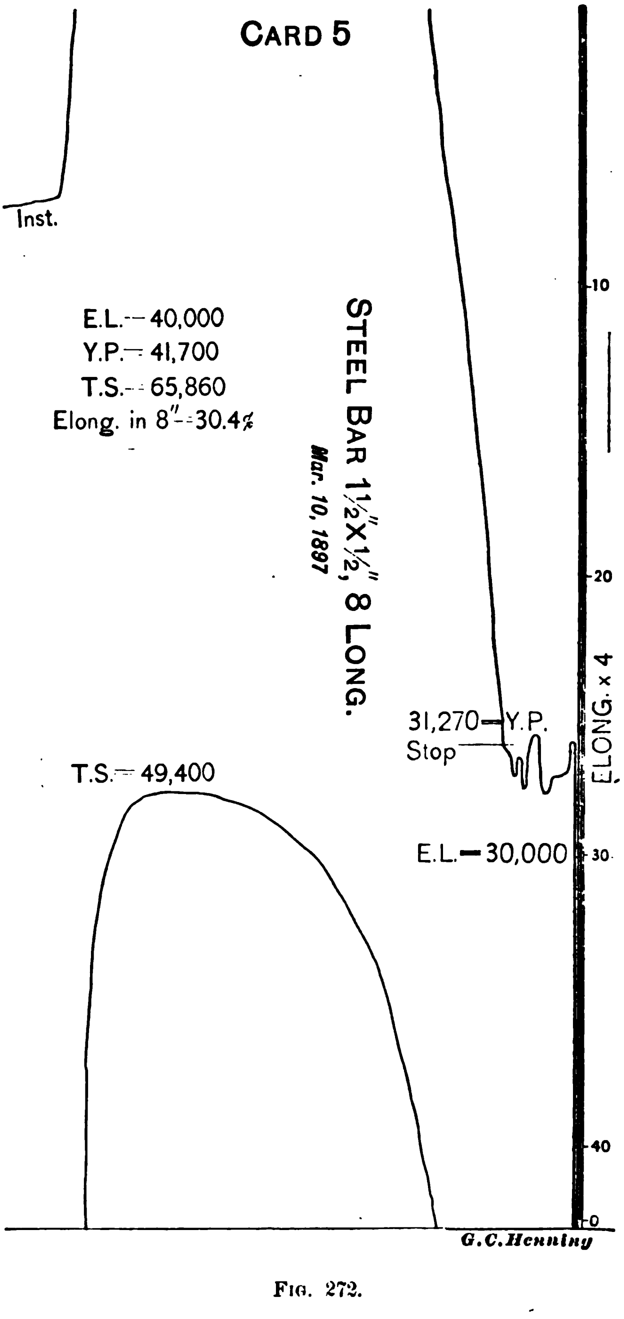
CARD 5
Inst.
E.L.—40,000
Y.P.—41,700
T.S.—65,860
Elong. in 8"—30.4%
STEEL BAR 1½"X½", 8" LONG.
Mar. 10, 1897
31,270—Y.P.
Stop
T.S.—49,400
E.L.—30,000
10
20
30
40
0
ELONG. x 4
G.C.Henning

FIG. 272.

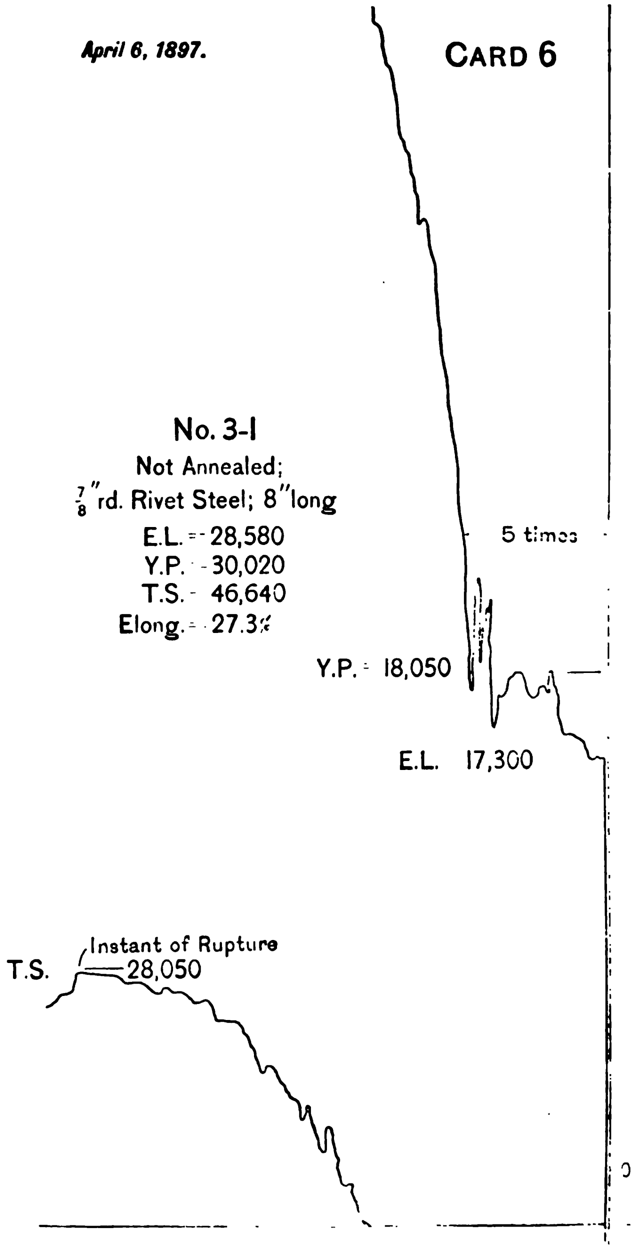
April 6, 1897.
CARD 6
No. 3-I
Not Annealed;
7/8" rd. Rivet Steel; 8" long
E.L. = 28,580
Y.P. = 30,020
T.S. = 46,640
Elong. = 27.3%
5 times
Y.P. = 18,050
E.L. 17,300
Instant of Rupture
T.S. 28,050
0

FIG. 273.

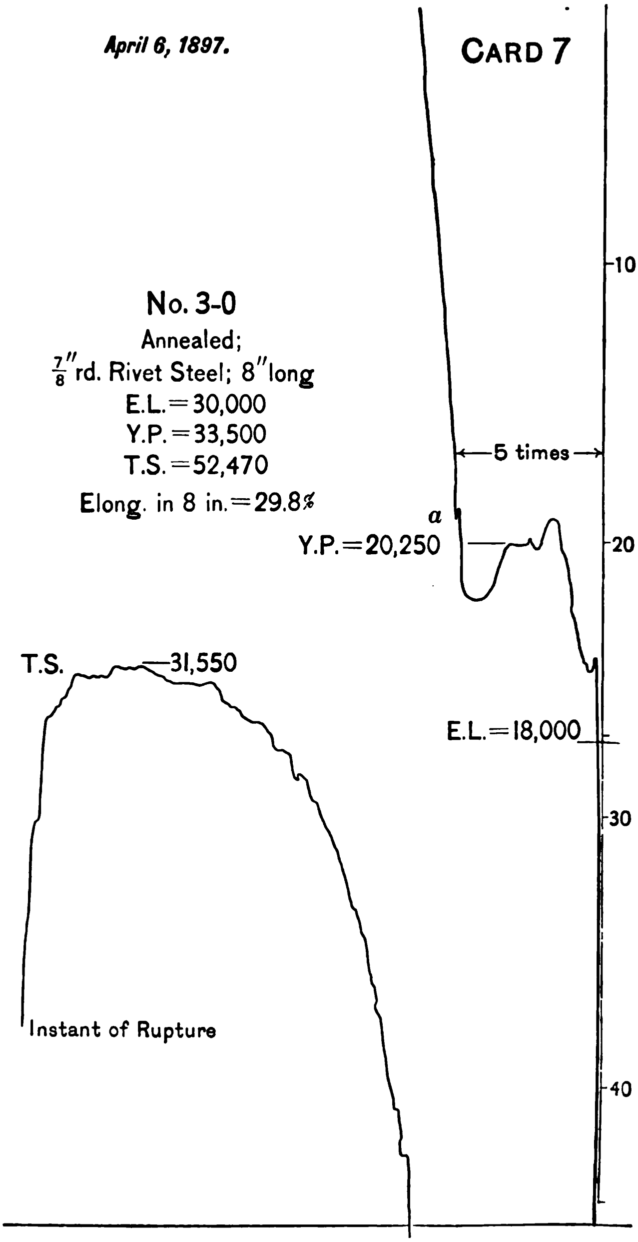
April 6, 1897.
CARD 7
No. 3-0
Annealed;
7/8" rd. Rivet Steel; 8" long
E.L.=30,000
Y.P.=33,500
T.S.=52,470
Elong. in 8 in.=29.8%
5 times
a
Y.P.=20,250
T.S. 31,550
E.L.=18,000
Instant of Rupture
10
20
30
40

FIG. 274.

record due to operation of the latter. If the record thus made is proportional throughout its length to the readings of micrometer, then the instrument is also correct; and as this is an investigation that should be made with each instrument to determine its rate of multiplication, it goes without saying that corrections can be readily applied to the record; further consideration thereof can be dismissed.

DISCUSSION.

Prof. C. H. Benjamin.—I am much interested in the instrument described by Mr. Henning, and regard it as a very ingenious and complete recorder. I entirely agree with him when he says that autographic records are indispensable in the testing of materials.

If a standard size and length of specimen can be adopted for each material, then a simple inspection and comparison of cards like those shown will answer all practical questions with regard to the strength, elasticity, and resilience, without the need of elaborate calculations, just as to-day the inspection and comparison of indicator diagrams tell the expert all he wants to know about the power and steam distribution of engines.

Furthermore, an extensometer should be self-contained and independent of everything but the test-piece itself.

Some extensometers, which are otherwise good, are so complicated and so interwoven with the frame and mechanism of the testing machine that it is a question which they record—the stretch of the specimen or the spring of the frame and the connecting devices. I have recently designed and constructed an extensometer which embodies this same principle of independence and which multiplies in the ratio of 50 to 1. This instrument is illustrated and described in the *Digest of Physical Tests* for January, 1897. (See also Fig. 277.)

It seems to me that a multiplication of five times is hardly enough to show clearly the behavior of the material inside the elastic limit, and I am afraid that I do not understand how the knife edges shown can prevent slipping unless nicks are made in the specimen.

Prof. Thomas Gray.—The first paragraph of Mr. Henning's paper I am afraid I do not quite understand. He says that the other instruments which have been devised are simply used for checking results, and are not relied on. I suppose I misunderstand the language. I must say for myself that the instrument which I described at the San Francisco meeting of this Society is used not for checking results, but for general purposes, and I rely upon it.* I think there is another meaning to the paragraph, which is the one which Mr. Henning intends us to take, but I want to give him an opportunity to state it.

For the apparatus itself I have nothing but praise. It seems to be an instrument which is just the thing which we have been wanting for many years for this kind of work—something which we can put on readily, which will be sensitive enough to give us the characteristics of the materials without troubling us with great sensibility, and, therefore, difficulty of operation. The five-to-one magnification is perhaps somewhat small, but with the exception of the modulus of elasticity, which may be a little uncertain, the diagrams will show all that is required for a check on the test. With so small a magnification we have nothing to show whether we have a uniform modulus or an elastic limit between the beginning of the test and the yield point. The yield point itself is very clearly shown with even less than five to one.

There is one point about which I should like to ask the author. Referring to the yield point part of the diagram in Card 5, how was the poise operated so as to give these backward and forward loops in the diagram, and just how much certainty is there as regards the actual value at the end of the extreme loop or at the point where it first turns?

I think that this instrument will practically solve the problem of testing if we can succeed in getting those who are interested in the testing of materials to insist upon the use of such an instrument for the purpose. That sems to be the practical difficulty. I had intended when I began work on this subject, before I diverged away into what Mr. Henning calls a scientific instrument, to get an apparatus which would be suitable for such a purpose. In the apparatus which I described at the San Francisco meeting, I drew attention to the importance of the double diagram which Mr. Henning has incorporated in the diagram which he draws here; that is to say, one diagram for the elastic part and a less sensitive diagram for the non-elastic part of the curve.

---

* *Transactions* A. S. M. E., vol. XIII., p. 633, No. 498.

*Mr. Henning.**—As Professor Benjamin calls attention to his recorder, I desire to describe it in order that you may see the great differences between his and mine. It will be seen that it draws a curve on circular ordinates; has only a very limited use; cannot be used beyond the yield point; is heavy and awkward on account of its dimensions; it cannot be applied to any testing machine without previous mechanical alteration or preparation of the machine; it requires considerable force—8 pounds—to move the recording mechanism. The following is Professor Benjamin's description as given in the *Digest*, January, 1897.

"As shown in Fig. 277, the Benjamin recorder is of the lever type and records the extension directly on a revolving drum multiplying the elongation in the ratio of 50 to 1. The object in designing this instrument was to make an extensometer which should be attached directly to the specimen and should be self-contained, not touching the testing machine itself and consequently not being affected by springing of the machine or by slipping of the jaws. It was desired that the instrument should contain the least possible number of moving parts and should be free from the errors due to the use of cords or belts.

"Referring to Fig. 277, *F* and *G* are the upper and lower grips respectively, which are attached to the specimen, *T*, by pointed steel thumb-screws and connected together by a piece of light brass tubing. The lower grip, *G*, is pivoted to a collar which can be adjusted vertically on the brass tube by means of milled check-nuts. To *G* is attached the light steel lever *L*, carrying at its outer end the pencil or pen, *P*.

"The lever is so proportioned that *RP* is 30 inches and the distance from the fulcrum, *R*, to the pointed screw is 0.6 inch, giving a multiplication of 50 to 1. The screw *S* enables the operator to adjust the pressure of the pencil on the paper, while the milled nuts and sliding collar on the lower grip provide for a vertical adjustment of the pencil.

"By means of a bronze elbow the horizontal brass tube *H*, carrying the drum *D*, is attached to the extensometer in such a manner that the drum may be swung horizontally into the most convenient position for recording. The drum is rotated by a small worm, *W*, which in turn is connected by means of a very

---

* Author's closure, under the Rules.

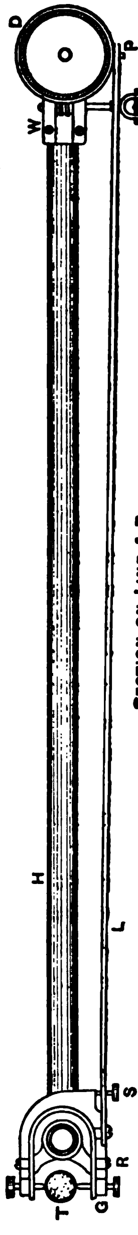

FIG. 276.

SECTION ON LINE A B.

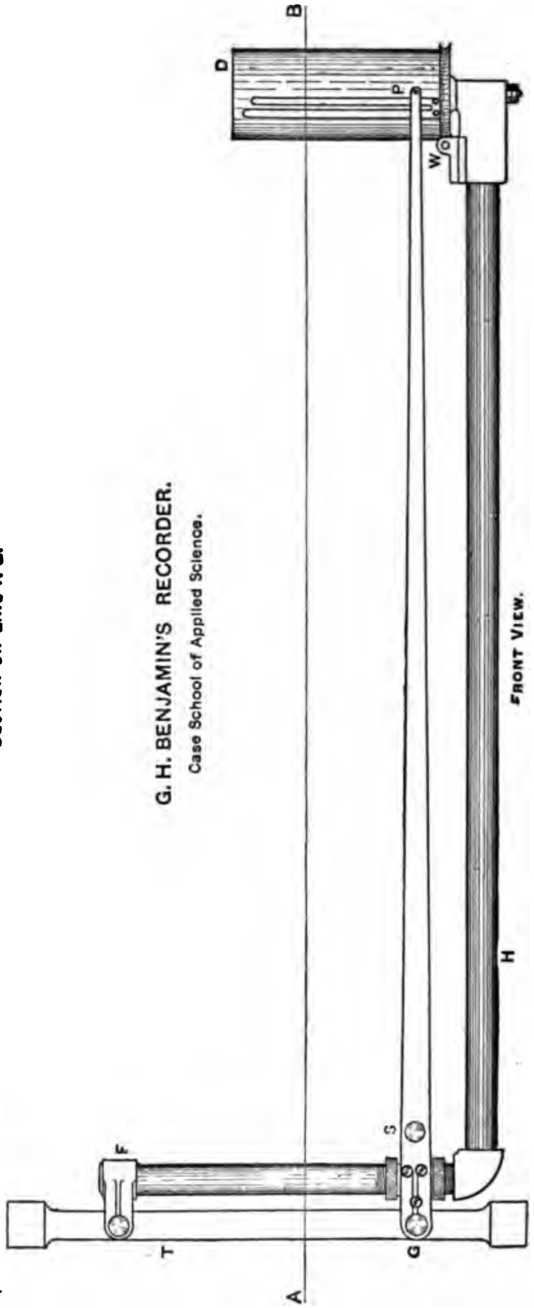

G. H. BENJAMIN'S RECORDER.
Case School of Applied Science.

FRONT VIEW.

FIG. 277.

Henning

light double Hooke's joint to a shaft on the testing machine. This latter shaft is geared directly to the hand wheel which moves the poise on the beam of the machine. The drum is thus rotated an amount proportional to the load on the specimen, while the pencil moves up on the attached paper an amount proportional to the elongation of the specimen.

"It will be seen that this instrument has no connection with the testing machine itself, except through the medium of the jointed shaft which drives the drum. This shaft is made of light tubing and is telescopic, so that there can be no pull or push exerted on the drum, and as the latter turns very easily there can be no appreciable deflection of the apparatus from this cause.

"The present instrument, an experimental one, weighs but 5 pounds, and exerts a horizontal pull of only 8 pounds on the screws of the upper grip."

From the description of the instrument and the diagram Fig. 278 here given it will be seen that the ordinates a_1 a_2 are arcs of circles, and the curve OB would appear as CD when laid out to rectangular coördinates. As it is admitted that there is a pull of 8 pounds on the gripping jaws F, there must be appreciable bending of the tube FS as the pull is exerted on a leverage equal to FT; and as this bending is variable according to the variation of pull, and as its record is multiplied fifty times, the record on the drum cannot be correct. In my recorder the pull necessary to move the marking point is always less than one ounce, being one-tenth ounce during the multiplied record and one-half ounce during that part of the record made on natural scale.

Moreover, while the Benjamin recorder can be used on vertical machines only, mine can be used on horizontal machines as well, with equal facility and accuracy. Although the recorder shown at the meeting multiplies but five times, all others will multiply ten times, which will be ample for all practical purposes, but hardly for scientific investigations of the elastic curve.

Professor Benjamin says that "he does not see how the knife edges which I use can prevent slipping." It is a fact that they prevent slipping, and probably the reason for it is that the instrument works practically without resistance (¾-ounce pull) and the knife edges are forced against the test-pieces with about

20 pounds pressure, which is sufficient to cause scoring of the surface of the test-pieces at instant of rupture, when the knife edges do allow slip.

I have made designs for recording apparatus for about twelve years, and burned them up until I devised this one; it was by the merest accident that I conceived the idea of using the steam indicator motion for that purpose. Everybody knew it could be done. Everybody had used steam-engine indicators

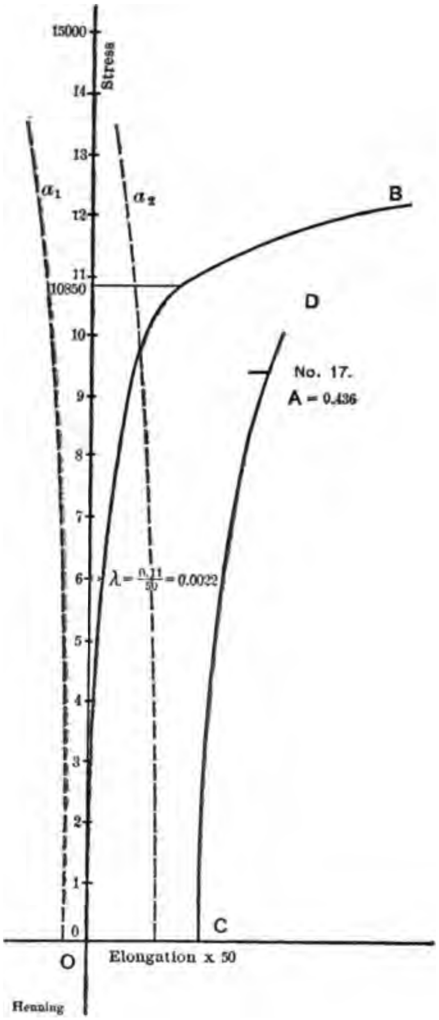

FIG. 278.

and saw them used, but nobody applied the device for testing materials. There is no invention in its use, but the introduction of the automatic stop is novel; it gives us a right-line diagram with rectangular axes.

Now, about Professor Gray's criticism of the first remark, I say they are "rather for checking results than for reliance upon their cards." I would like to say this, that all, with the exception of Professor Gray's, are merely used for checking. None of them is in use for commercial purposes. Professor Gray's is accurate and can be relied upon, but it has not been used in commercial work. It is a laboratory apparatus of the highest order and accuracy, I think; but as it does not come in this class, I simply used the words " they are, however, rather for checking." Of course that means they are not entirely for checking, but they are not relied upon. I must except Professor Gray's instrument from the whole class as one distinct in its character and behavior.

In regard to the loops in Fig. 268, there are three things we would have to consider in using such apparatus—first, the behavior of the material; secondly, the behavior of the apparatus which records the behavior of the material, and thirdly, the apparatus by which loads are applied. Unfortunately, the latter are the most unreliable and have great influence on the diagrams obtained. These diagrams were originally drawn in pencil, then inked in by myself, then retransferred by the engraver. But although not strictly correct, they are essentially so. A slight bend at the elastic limit is distinctly shown; then a greater up to the yield point. Professor Woolson and myself were working together at the time and were checking each other, and in trying to keep the beam floating, the poise was run forward and back repeatedly to keep the beam in mid-position. The inertia of the testing machine made this almost impossible, and hence the many kinks. The point where the automatic stop came into action is shown just where a sharp little kink is seen beyond the yield point. The machine was a 100,000-pound machine, and the inertia of the whole mechanism was so great that we could not balance accurately at the yield point, where the resistance actually decreases, while the material keeps on stretching.

If you will look at Card 3, obtained on a machine having the same weighing lever as the above, but with a poise one-tenth as

To *mark off the scale for load*, the poise is advanced, and for every 1,000 pound mark reached on the beam, a mark is made on the paper on the drum. As the tension on the string is

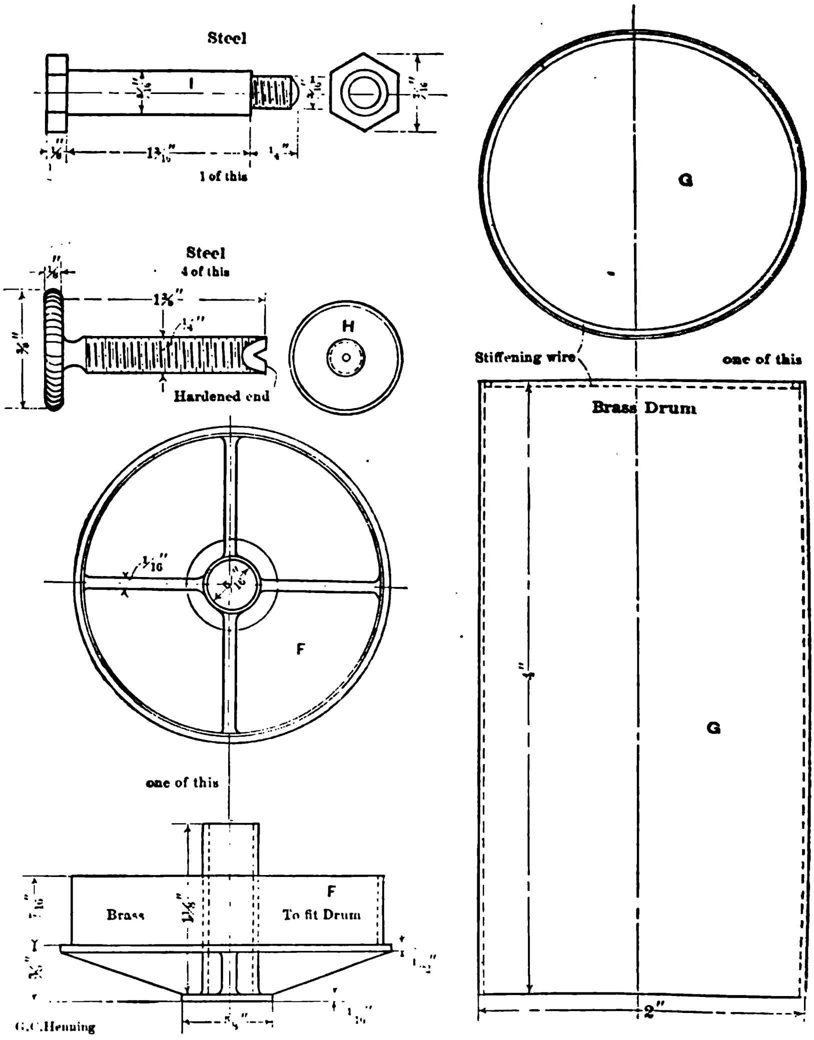

FIG. 267.

always constant, being regulated by the balance weight, the string, being of the stretchless kind, retains an exact length, as is demonstrated by the scales laid off on the diagrams. The line thus drawn on the drum serves as a zero or base line;

another is drawn at right angles to it by running the marker up and down.

Now the test can proceed, and the only precaution necessary is to keep the weighing beam exactly at its central or floating position throughout the test.

When the material has stretched somewhat, a sudden change of stretch will be observed, very soon followed by a much more rapid change. The first change indicates the "elastic limit"; the second, the "yield point." Supposing that the material is a hard one, with very little deformation before rupture, the whole curve is drawn out on the magnified scale. Should the material be iron, steel, copper, or other highly extensible material, then to record the stretch to the breaking point would require a very long drum; in the case of a rod of steel 8 inches long with 30 per cent. stretch this would require a drum 12 inches long and more, and a parallel motion which would be very large, clumsy, and expensive. As a result the apparatus would be unwieldy and almost impossible to use. Moreover, the elongation up to yield point alone need be determined with great accuracy, and as the permanent elongation is never measured closer than is possible with a steel scale, it need not be recorded with greater nicety. Now, as the stretch of all structural material up to the yield point is always less than $\frac{1}{10}$ inch on an 8-inch length, the hooked rod *C* is so adjusted that at the instant of $\frac{1}{10}$-inch stretch it arrests the parallel motion, and causing it to slide as a unit on the rods L_1. As the parallel motion multiplies 10 times this stretch will be recorded as 1 inch on the paper. After this instant all further stretch is recorded, actual or natural scale. Hence, to measure the total elongation at instant of rupture, all that is necessary is to measure the elongation as shown on the record and deduct $\frac{9}{10}$ inch from it. This arrangement makes it possible to record all tests on a drum 4 inches high.

The drum chosen in this apparatus has a diameter of about 2 inches, or a length of circumference of 6½ inches. If a longer record is desirable the drum is allowed to revolve as often as necessary or a larger drum is used, the curves then being continuous around the drum.

As the weighing beams on testing machines are generally 50 inches long, this would require 8 revolutions of drum for 100,000 pounds load; however, in ordinary testing, loads do not usually

Conditions which the instrument must fulfil are the following:

(*a*) It must be applicable for extension and compression.

(*b*) The action must not be limited to one direction from the initial readings, but negative readings must be obtainable without interruption or adjustment.

(*c*) The instrument must be free from changes of shape during test.

(*d*) There must be neither slip nor play.

The instruments are in all cases duplex, revolving mirrors being attached to opposite sides of the pieces of material, the changes of length of which are to be determined, as it is generally assumed that the true axial elongation of material is equal to that of two parallel opposite elements of its surfaces.

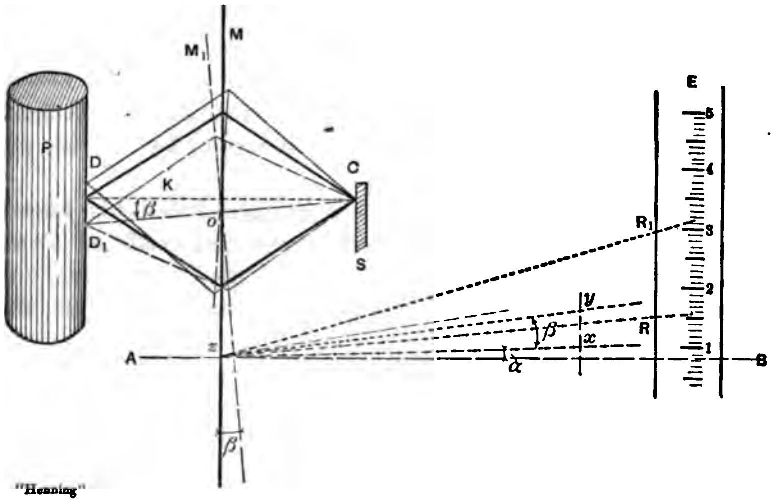

FIG. 279.

The theory of action of one mirror will suffice to explain the action of the whole apparatus.

A prism *K*, carrying mirror *M*, is pressed by a spring *S* at point *C* against a piece of material *P* at *D*; a telescope is mounted at any convenient point and distance to look at the mirror *M*. Let *AB* be its line of sight. Opposite *M*, and at a known distance, a scale is mounted so that its image reflected by *M* can be seen in the telescope. The telescope need be mounted neither so that its line of sight stands normal to surface of mirror nor directed at its centre. Fig. 279 is drawn to show line of sight, making an angle α with reflecting surface at a distance *oz* below its centre.

Now, as the point D, either by compression or extension of material, moves to D_1, the axis of mirror M changes to M_1 without affecting line of sight AB; the new angle between normal to mirror and this line will be $\beta + \alpha$. As the angles of incidence and reflection are equal, the initial point of scale seen reflected by mirror will not be on zx continued, but at zR continued.

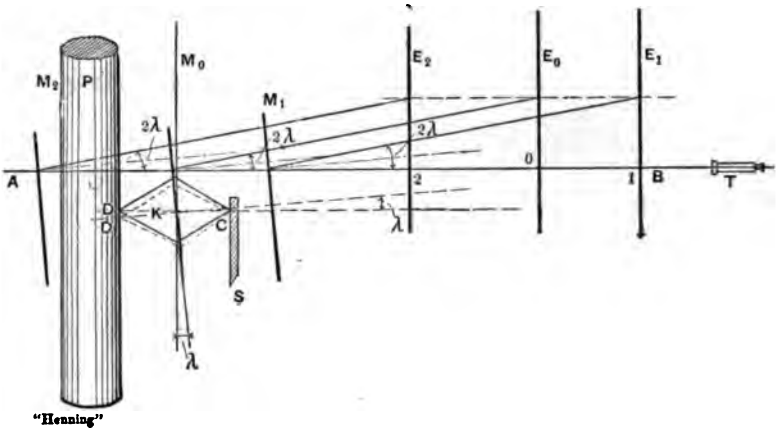

FIG. 280.

Similarly, the new point of scale seen by telescope will be R_1, or $2 \times$ angle β. The actual difference between initial and final readings will be $R_1 - R$. But $DD_1 : DC = xy : zx$;

$$\therefore\ DD_1 = \frac{DC \times xy}{zx}, \text{ or } xy = \frac{zx}{DC} \times DD_1;$$

but as the telescope reads $RR_1 = 2xy$, $RR_1 = \frac{2zx}{DC} \times DD$; therefore, assuming $DC = .24$ inches and $zx = 5$ feet $= \frac{6000}{100}$ inches, we will have $RR_1 = 2.\frac{6000}{24}\ DD_1$, or $= 500\ DD_1$, which is a multiplication of 500 times.

Now, as two observations are read, one on each mirror, it can be legitimately said that the reading of instrument is equal to 1,000 times the change of length under observation.

The fact that the axis of mirror may not be exactly on the axis of rotation at C has been urged as a source of error.

To prove that it is not, let us examine Fig. 280, which shows the mirror placed in three different positions at M, M_1, and M_2, which cover all possible variations. Using the same rotation as before and placing the line of sight AB at random, we will find that, as long as the scales are always placed at a certain measured distance from the reflecting surface, the readings will be identical in any position of the mirror.

T is the telescope; P the piece of material; K, knife edge, carrying mirror at point C of spring S. λ = angle of displacement of edge D to D_1. Although the line of sight intersects the reflecting surfaces at three different points, the angle of reflection of line of sight is always equal to 2λ. Now, as distance $M_0E_0 = M_1E_1 = M_2E_2 = L$, OE_0 must be equal to $1E_1 = 2E_2$. Hence position of mirror has no effect on readings.

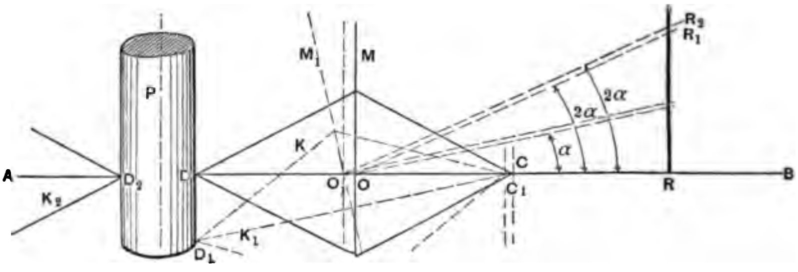

"Henning"

FIG. 281.

It might be said that change of relative positions of rolling knife edges, mirrors, and scales introduces errors of readings, as the obliquity of knife edge DC changes relative leverages. As this seems plausible we will examine Fig. 281, which again shows material P, knife edge K, mirror M, fixed point C, scale RR_1, and line of sight AB.

The point D is shown to have dropped to D_1, and mirror M to M_1. This causes O to shift to O_1, C to C_1, and reading on scale from R_1 to R_2, and it will be at once said that this therefore proves that instrument must be in error, and one, at that, which is constantly increasing.

When, however, it is remembered that the opposite mirror acts in the same manner, a little thought will demonstrate that the first error is exactly counterbalanced by that of the second mirror. It will be seen that the error R_1 R_2 is due to the shifting of M from O to O_1, thereby increasing the length OR because distance from axis of piece of material to centre of knife edge K_1 decreases. But the distance of centre of other knife edge K_2 from axis of material also decreases; hence the distance of second mirror from its scale decreases, and exactly as much as that of the first increases. Hence the two errors are precisely compensating.

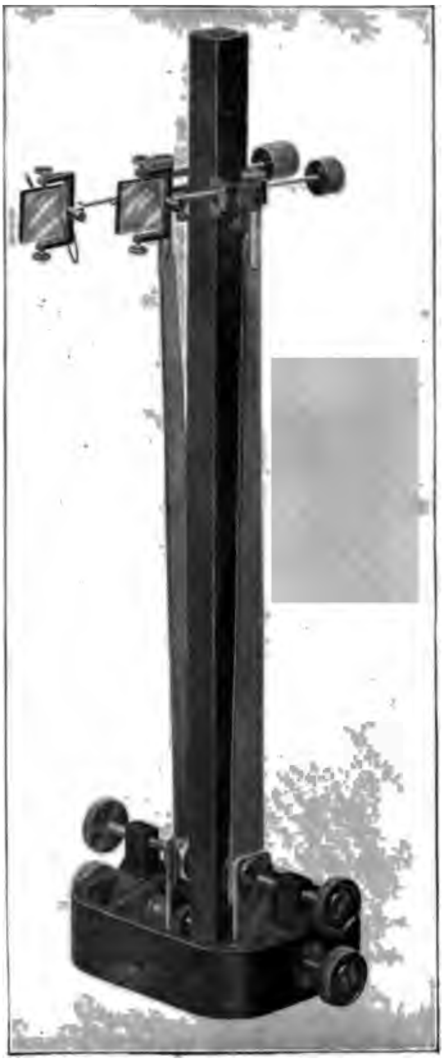

FIG. 282.

There is but one case in which these errors do not compensate each other, and that occurs when the element at D does not change its length in the same manner as that at D_2. This, of course, happens frequently, but the difference is so minute that it is within the errors of readings of the instrument, and hence negligible.

The foregoing analysis proving that the principles of the apparatus are correct, I will proceed to describe it as executed, and indicate the various practical points which must be provided for. Figs. 282 and 283 show the apparatus in its completed form.

A frame hinged at two opposite sides is connected by taper pins, one of which is removable; through the two other sides very nicely fitted bushes pass, which carry springs at their inner ends. The bushes are tapped for screws

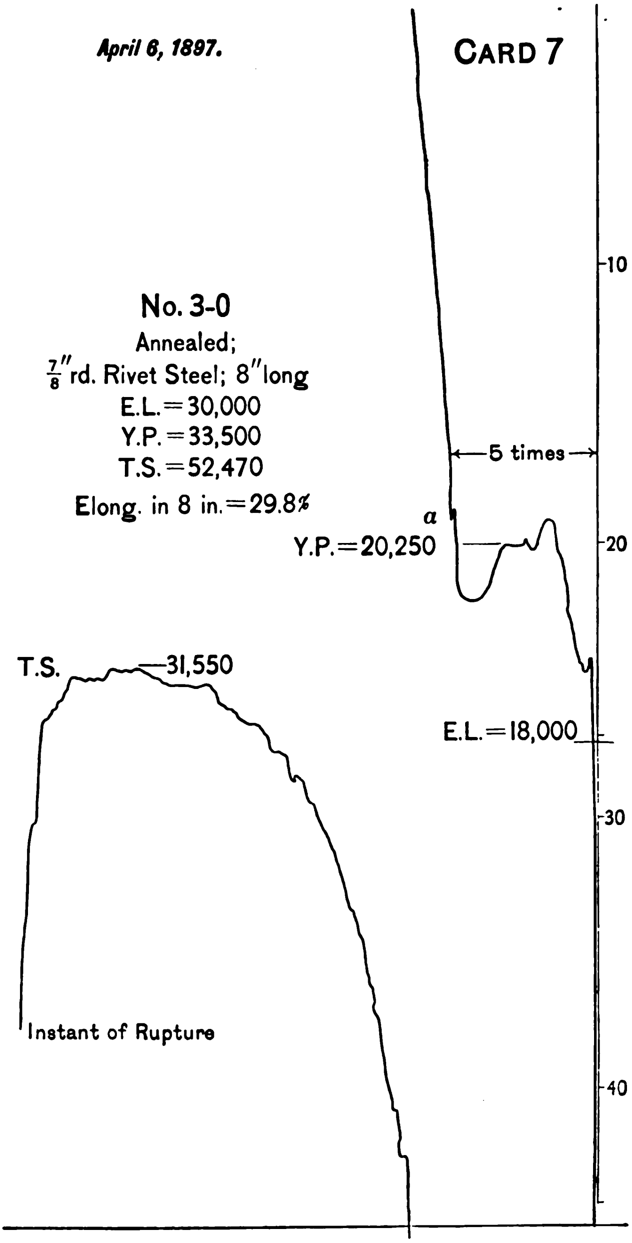
April 6, 1897.
CARD 7
No. 3-0
Annealed;
7/8" rd. Rivet Steel; 8" long
E.L.=30,000
Y.P.=33,500
T.S.=52,470
Elong. in 8 in.=29.8%
5 times
a
Y.P.=20,250
T.S.
31,550
E.L.=18,000
Instant of Rupture
10
20
30
40

FIG. 274.

record due to operation of the latter. If the record thus made is proportional throughout its length to the readings of micrometer, then the instrument is also correct; and as this is an investigation that should be made with each instrument to determine its rate of multiplication, it goes without saying that corrections can be readily applied to the record; further consideration thereof can be dismissed.

DISCUSSION.

Prof. C. H. Benjamin.—I am much interested in the instrument described by Mr. Henning, and regard it as a very ingenious and complete recorder. I entirely agree with him when he says that autographic records are indispensable in the testing of materials.

If a standard size and length of specimen can be adopted for each material, then a simple inspection and comparison of cards like those shown will answer all practical questions with regard to the strength, elasticity, and resilience, without the need of elaborate calculations, just as to-day the inspection and comparison of indicator diagrams tell the expert all he wants to know about the power and steam distribution of engines.

Furthermore, an extensometer should be self-contained and independent of everything but the test-piece itself.

Some extensometers, which are otherwise good, are so complicated and so interwoven with the frame and mechanism of the testing machine that it is a question which they record—the stretch of the specimen or the spring of the frame and the connecting devices. I have recently designed and constructed an extensometer which embodies this same principle of independence and which multiplies in the ratio of 50 to 1. This instrument is illustrated and described in the *Digest of Physical Tests* for January, 1897. (See also Fig. 277.)

It seems to me that a multiplication of five times is hardly enough to show clearly the behavior of the material inside the elastic limit, and I am afraid that I do not understand how the knife edges shown can prevent slipping unless nicks are made in the specimen.

Prof. Thomas Gray.—The first paragraph of Mr. Henning's paper I am afraid I do not quite understand. He says that the other instruments which have been devised are simply used for checking results, and are not relied on. I suppose I misunderstand the language. I must say for myself that the instrument which I described at the San Francisco meeting of this Society is used not for checking results, but for general purposes, and I rely upon it.* I think there is another meaning to the paragraph, which is the one which Mr. Henning intends us to take, but I want to give him an opportunity to state it.

For the apparatus itself I have nothing but praise. It seems to be an instrument which is just the thing which we have been wanting for many years for this kind of work—something which we can put on readily, which will be sensitive enough to give us the characteristics of the materials without troubling us with great sensibility, and, therefore, difficulty of operation. The five-to-one magnification is perhaps somewhat small, but with the exception of the modulus of elasticity, which may be a little uncertain, the diagrams will show all that is required for a check on the test. With so small a magnification we have nothing to show whether we have a uniform modulus or an elastic limit between the beginning of the test and the yield point. The yield point itself is very clearly shown with even less than five to one.

There is one point about which I should like to ask the author. Referring to the yield point part of the diagram in Card 5, how was the poise operated so as to give these backward and forward loops in the diagram, and just how much certainty is there as regards the actual value at the end of the extreme loop or at the point where it first turns?

I think that this instrument will practically solve the problem of testing if we can succeed in getting those who are interested in the testing of materials to insist upon the use of such an instrument for the purpose. That sems to be the practical difficulty. I had intended when I began work on this subject, before I diverged away into what Mr. Henning calls a scientific instrument, to get an apparatus which would be suitable for such a purpose. In the apparatus which I described at the San Francisco meeting, I drew attention to the importance of the double diagram which Mr. Henning has incorporated in the diagram which he draws here; that is to say, one diagram for the elastic part and a less sensitive diagram for the non-elastic part of the curve.

---

* *Transactions* A. S. M. E., vol. XIII., p. 633, No. 498.

*Mr. Henning.**—As Professor Benjamin calls attention to his recorder, I desire to describe it in order that you may see the great differences between his and mine. It will be seen that it draws a curve on circular ordinates; has only a very limited use; cannot be used beyond the yield point; is heavy and awkward on account of its dimensions; it cannot be applied to any testing machine without previous mechanical alteration or preparation of the machine; it requires considerable force—8 pounds—to move the recording mechanism. The following is Professor Benjamin's description as given in the *Digest*, January, 1897.

"As shown in Fig. 277, the Benjamin recorder is of the lever type and records the extension directly on a revolving drum multiplying the elongation in the ratio of 50 to 1. The object in designing this instrument was to make an extensometer which should be attached directly to the specimen and should be self-contained, not touching the testing machine itself and consequently not being affected by springing of the machine or by slipping of the jaws. It was desired that the instrument should contain the least possible number of moving parts and should be free from the errors due to the use of cords or belts.

"Referring to Fig. 277, *F* and *G* are the upper and lower grips respectively, which are attached to the specimen, *T*, by pointed steel thumb-screws and connected together by a piece of light brass tubing. The lower grip, *G*, is pivoted to a collar which can be adjusted vertically on the brass tube by means of milled check-nuts. To *G* is attached the light steel lever *L*, carrying at its outer end the pencil or pen, *P*.

"The lever is so proportioned that *RP* is 30 inches and the distance from the fulcrum, *R*, to the pointed screw is 0.6 inch, giving a multiplication of 50 to 1. The screw *S* enables the operator to adjust the pressure of the pencil on the paper, while the milled nuts and sliding collar on the lower grip provide for a vertical adjustment of the pencil.

"By means of a bronze elbow the horizontal brass tube *H*, carrying the drum *D*, is attached to the extensometer in such a manner that the drum may be swung horizontally into the most convenient position for recording. The drum is rotated by a small worm, *W*, which in turn is connected by means of a very

---

* Author's closure, under the Rules.

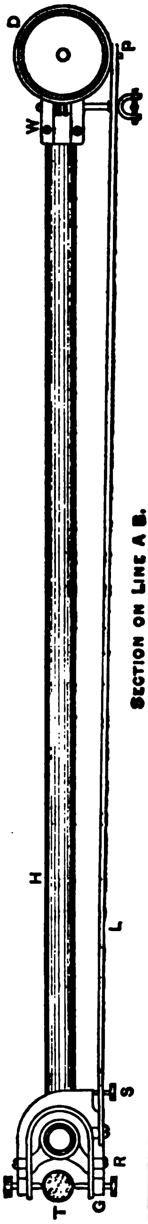

Fig. 276.

Section on Line A B.

G. H. BENJAMIN'S RECORDER.

Case School of Applied Science.

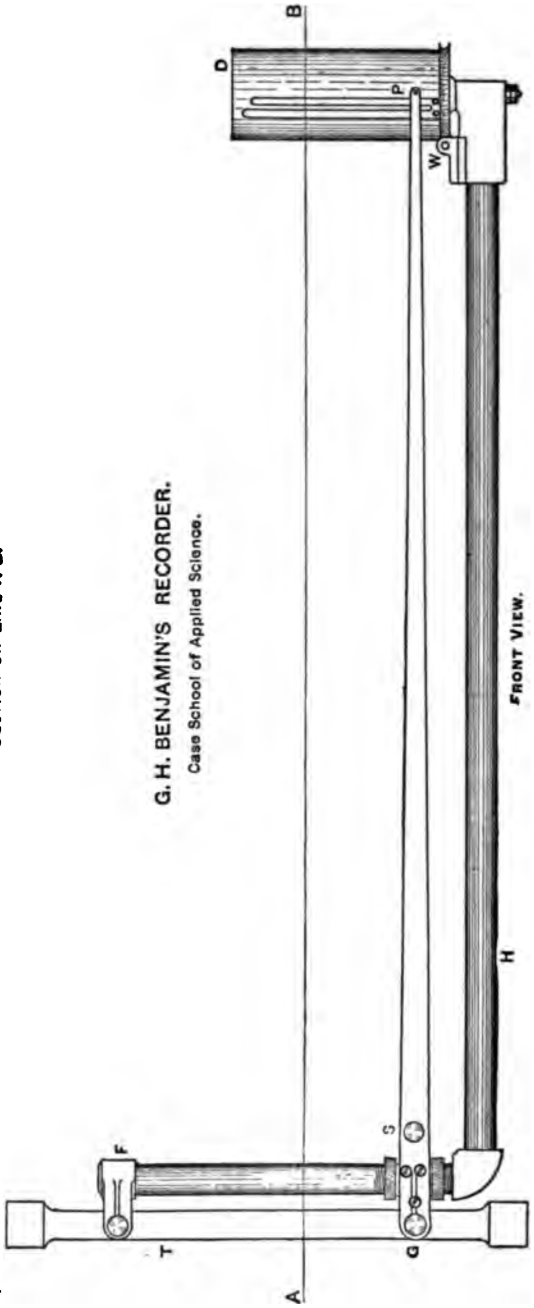

Front View.

Fig. 277.

light double Hooke's joint to a shaft on the testing machine. This latter shaft is geared directly to the hand wheel which moves the poise on the beam of the machine. The drum is thus rotated an amount proportional to the load on the specimen, while the pencil moves up on the attached paper an amount proportional to the elongation of the specimen.

"It will be seen that this instrument has no connection with the testing machine itself, except through the medium of the jointed shaft which drives the drum. This shaft is made of light tubing and is telescopic, so that there can be no pull or push exerted on the drum, and as the latter turns very easily there can be no appreciable deflection of the apparatus from this cause.

"The present instrument, an experimental one, weighs but 5 pounds, and exerts a horizontal pull of only 8 pounds on the screws of the upper grip."

From the description of the instrument and the diagram Fig. 278 here given it will be seen that the ordinates a_1 a_2 are arcs of circles, and the curve OB would appear as CD when laid out to rectangular coördinates. As it is admitted that there is a pull of 8 pounds on the gripping jaws F, there must be appreciable bending of the tube FS as the pull is exerted on a leverage equal to FT; and as this bending is variable according to the variation of pull, and as its record is multiplied fifty times, the record on the drum cannot be correct. In my recorder the pull necessary to move the marking point is always less than one ounce, being one-tenth ounce during the multiplied record and one-half ounce during that part of the record made on natural scale.

Moreover, while the Benjamin recorder can be used on vertical machines only, mine can be used on horizontal machines as well, with equal facility and accuracy. Although the recorder shown at the meeting multiplies but five times, all others will multiply ten times, which will be ample for all practical purposes, but hardly for scientific investigations of the elastic curve.

Professor Benjamin says that "he does not see how the knife edges which I use can prevent slipping." It is a fact that they prevent slipping, and probably the reason for it is that the instrument works practically without resistance (¾-ounce pull) and the knife edges are forced against the test-pieces with about

20 pounds pressure, which is sufficient to cause scoring of the surface of the test-pieces at instant of rupture, when the knife edges do allow slip.

I have made designs for recording apparatus for about twelve years, and burned them up until I devised this one; it was by the merest accident that I conceived the idea of using the steam indicator motion for that purpose. Everybody knew it could be done. Everybody had used steam-engine indicators

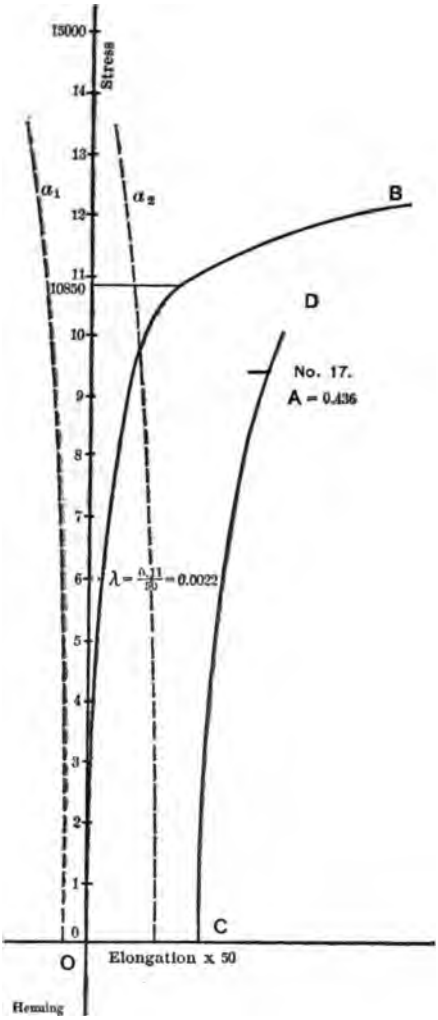

FIG. 278.

and saw them used, but nobody applied the device for testing materials. There is no invention in its use, but the introduction of the automatic stop is novel; it gives us a right-line diagram with rectangular axes.

Now, about Professor Gray's criticism of the first remark, I say they are "rather for checking results than for reliance upon their cards." I would like to say this, that all, with the exception of Professor Gray's, are merely used for checking. None of them is in use for commercial purposes. Professor Gray's is accurate and can be relied upon, but it has not been used in commercial work. It is a laboratory apparatus of the highest order and accuracy, I think; but as it does not come in this class, I simply used the words " they are, however, rather for checking." Of course that means they are not entirely for checking, but they are not relied upon. I must except Professor Gray's instrument from the whole class as one distinct in its character and behavior.

In regard to the loops in Fig. 268, there are three things we would have to consider in using such apparatus—first, the behavior of the material; secondly, the behavior of the apparatus which records the behavior of the material, and thirdly, the apparatus by which loads are applied. Unfortunately, the latter are the most unreliable and have great influence on the diagrams obtained. These diagrams were originally drawn in pencil, then inked in by myself, then retransferred by the engraver. But although not strictly correct, they are essentially so. A slight bend at the elastic limit is distinctly shown; then a greater up to the yield point. Professor Woolson and myself were working together at the time and were checking each other, and in trying to keep the beam floating, the poise was run forward and back repeatedly to keep the beam in mid-position. The inertia of the testing machine made this almost impossible, and hence the many kinks. The point where the automatic stop came into action is shown just where a sharp little kink is seen beyond the yield point. The machine was a 100,000-pound machine, and the inertia of the whole mechanism was so great that we could not balance accurately at the yield point, where the resistance actually decreases, while the material keeps on stretching.

If you will look at Card 3, obtained on a machine having the same weighing lever as the above, but with a poise one-tenth as heavy and the same kind of knife edges, it will be seen how smooth the curve is, because the machine was capable of being used for the purpose of following the variations of load accurately; in the other machine it was not; and it will be noticed that in diagram Card 5 there is a difference of about 500 pounds between the highest and lowest points of the kinks. That shows the lack of sensitiveness of the machine—that is all. It does not show the behavior of the material, which I have found in a number of other cards. Card 6 and Card 7 have the same indeterminate and unsatisfactory loops or points. That is solely due, I believe, to the testing machine, because the ideal change of shape, when straining uniformly, is smooth, with a considerable drop, or diminution of load. As the stop comes into play a sharp change of direction of curve is seen. But the ideal yield-point curve, which has been determined many a time, is a smooth descending line. The average line through the highest and lowest kinks will be the correct curve. Of course the curve changes according to how the machine is run, whether uniformly or whether it is stopped and started again. If it is run slow enough, it will often be found that the curve is exactly as in those wire cards (Card 3), and it will be like it, or very nearly so. The point is to run the machine at a uniform speed, and then this distinct drop in the curve at the yield point will be obtained. In this instrument the multiplication is five times, because that is the highest multiplication of any indicator motion obtainable in the market at the time. It answers reasonably well. My idea is to use ten multiplications, because I think that gives better results than this; although, from the experience I have had, it answers the purpose as a practical instrument to get sufficient cards and to check up the operator. For scientific purposes, of course, it would be better to have it multiplied very much more, but then it will be seen that the system of recording would have to be modified, because the apparatus is so small.

DCCXXXVII.*

A MIRROR EXTENSOMETER.

BY GUS. C. HENNING, NEW YORK CITY.

(Member of the Society.)

In Bauschinger's *Mittheilungen*, Nos. 3 and 6, 1873-1874, also No. 1, 1896, will be found descriptions of mirror apparatus first designed and used by himself for measurements of change of length of materials under test. (See the *Werder Testing Machine and Measuring Instruments*, by Prof. J. Bauschinger, 1882; also *Testing of Materials of Construction*, by Unwin, pp. 220 *et seq.*)

Since the late Professor Bauschinger introduced his mirror apparatus other investigators have constructed modified forms thereof, as Professors Martens of Berlin, Kirsch of Vienna, and Unwin of London. Each introduced certain changes for the purpose of simplifying it and facilitating its use. Nevertheless, each of them left the instrument in the shape of several loose pieces, awkward to handle, difficult and time-robbing to attach and adjust, and requiring previous marking of test-pieces, which itself could hardly be done accurately except by the use of auxiliary tools. Experts only could do it without such.

To overcome these difficulties necessitated the construction of an apparatus applicable to all shapes and sizes with equal facility and despatch, and which at the same time measures its own gauge length. Gauge length is that standard length of test-piece on which measurements are to be made. In order to simplify and facilitate the use of this apparatus, I have designed and had constructed a form which is herewith described.

How far I have succeeded in these respects, without in any way limiting the usefulness of the apparatus, I will leave to my critics to decide.

---

* Presented at the Hartford meeting (May, 1897) of the American Society of Mechanical Engineers, and forming part of Volume XVIII. of the *Transactions*.

Conditions which the instrument must fulfil are the following:

(*a*) It must be applicable for extension and compression.

(*b*) The action must not be limited to one direction from the initial readings, but negative readings must be obtainable without interruption or adjustment.

(*c*) The instrument must be free from changes of shape during test.

(*d*) There must be neither slip nor play.

The instruments are in all cases duplex, revolving mirrors being attached to opposite sides of the pieces of material, the changes of length of which are to be determined, as it is generally assumed that the true axial elongation of material is equal to that of two parallel opposite elements of its surfaces.

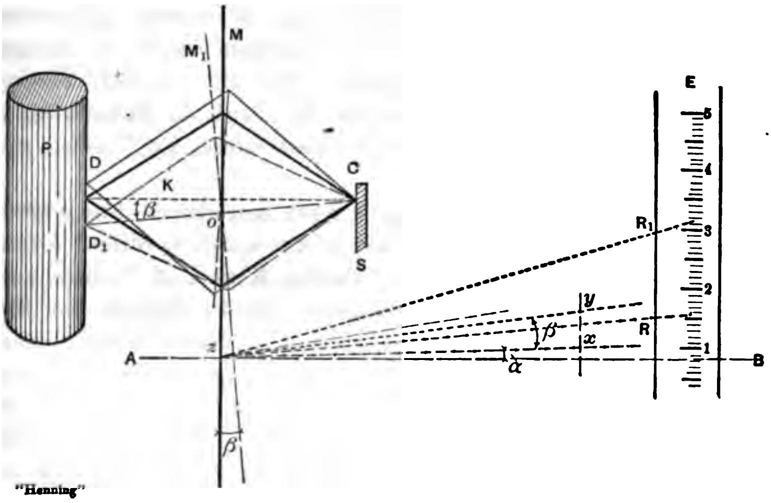

"Henning"

FIG. 279.

The theory of action of one mirror will suffice to explain the action of the whole apparatus.

A prism *K*, carrying mirror *M*, is pressed by a spring *S* at point *C* against a piece of material *P* at *D*; a telescope is mounted at any convenient point and distance to look at the mirror *M*. Let *AB* be its line of sight. Opposite *M*, and at a known distance, a scale is mounted so that its image reflected by *M* can be seen in the telescope. The telescope need be mounted neither so that its line of sight stands normal to surface of mirror nor directed at its centre. Fig. 279 is drawn to show line of sight, making an angle α with reflecting surface at a distance oz below its centre.

Now, as the point D, either by compression or extension of material, moves to D_1, the axis of mirror M changes to M_1 without affecting line of sight AB; the new angle between normal to mirror and this line will be $\beta + \alpha$. As the angles of incidence and reflection are equal, the initial point of scale seen reflected by mirror will not be on zx continued, but at zR continued.

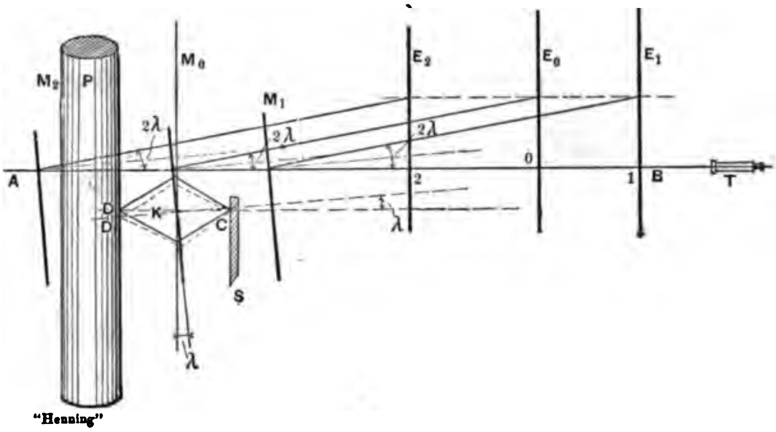

FIG. 280.

Similarly, the new point of scale seen by telescope will be R_1, or 2 × angle β. The actual difference between initial and final readings will be $R_1—R$. But $DD_1 : DC = xy : zx$;

$$\therefore\ DD_1 = \frac{DC \times xy}{zx}, \text{ or } xy = \frac{zx}{DC} \times DD_1;$$

but as the telescope reads $RR_1 = 2xy$, $RR_1 = \frac{2zx}{DC} \times DD$; therefore, assuming $DC = .24$ inches and $zx = 5$ feet $= \frac{6000}{100}$ inches, we will have $RR_1 = 2.\frac{6000}{24}\ DD_1$, or $= 500\ DD_1$, which is a multiplication of 500 times.

Now, as two observations are read, one on each mirror, it can be legitimately said that the reading of instrument is equal to 1,000 times the change of length under observation.

The fact that the axis of mirror may not be exactly on the axis of rotation at C has been urged as a source of error.

To prove that it is not, let us examine Fig. 280, which shows the mirror placed in three different positions at M, M_1, and M_2, which cover all possible variations. Using the same rotation as before and placing the line of sight AB at random, we will find that, as long as the scales are always placed at a certain measured distance from the reflecting surface, the readings will be identical in any position of the mirror.

T is the telescope; P the piece of material; K, knife edge, carrying mirror at point C of spring S. λ = angle of displacement of edge D to D_1. Although the line of sight intersects the reflecting surfaces at three different points, the angle of reflection of line of sight is always equal to 2λ. Now, as distance $M_0E_0 = M_1E_1 = M_2E_2 = L$, OE_0 must be equal to $1E_1 = 2E_2$. Hence position of mirror has no effect on readings.

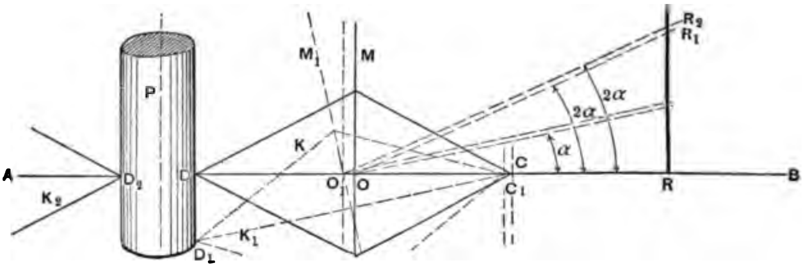

"Henning"

FIG. 281.

It might be said that change of relative positions of rolling knife edges, mirrors, and scales introduces errors of readings, as the obliquity of knife edge DC changes relative leverages. As this seems plausible we will examine Fig. 281, which again shows material P, knife edge K, mirror M, fixed point C, scale RR_1, and line of sight AB.

The point D is shown to have dropped to D_1, and mirror M to M_1. This causes O to shift to O_1, C to C_1, and reading on scale from R_1 to R_2, and it will be at once said that this therefore proves that instrument must be in error, and one, at that, which is constantly increasing.

When, however, it is remembered that the opposite mirror acts in the same manner, a little thought will demonstrate that the first error is exactly counterbalanced by that of the second mirror. It will be seen that the error R_1 R_2 is due to the shifting of M from O to O_1, thereby increasing the length OR because distance from axis of piece of material to centre of knife edge K_1 decreases. But the distance of centre of other knife edge K_2 from axis of material also decreases; hence the distance of second mirror from its scale decreases, and exactly as much as that of the first increases. Hence the two errors are precisely compensating.

There is but one case in which these errors do not compensate each other, and that occurs when the element at D does not change its length in the same manner as that at D_2. This, of course, happens frequently, but the difference is so minute that it is within the errors of readings of the instrument, and hence negligible.

The foregoing analysis proving that the principles of the apparatus are correct, I will proceed to describe it as executed, and indicate the various practical points which must be provided for. Figs. 282 and 283 show the apparatus in its completed form.

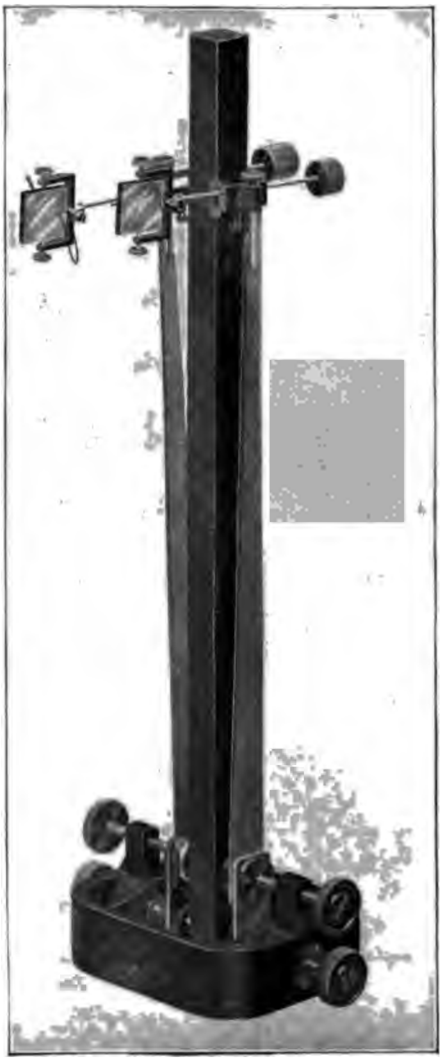

Fig. 282.

A frame hinged at two opposite sides is connected by taper pins, one of which is removable; through the two other sides very nicely fitted bushes pass, which carry springs at their inner ends. The bushes are tapped for screws which have knurled heads at their outer ends and removable hardened points or knife edges at the others. These screws are shouldered at their inner ends, which pass through the lower ends of long springs having steady-arms, and carrying the revolving mirrors at their upper ends.

FIG. 283.—TELESCOPE AND SCALES.

The telescope is mounted on an adjustable stand and swings about a vertical and the horizontal axes. Two of the three legs of the stand are provided with adjustable spring clamps, which carry the scales. These clamps are so arranged that they can carry the scales vertically or horizontally, and also be advanced one ahead of the other, so that each can be set to an exact distance from its reflecting mirror.

In Fig. 284, *A* and *B* are the two symmetrical halves of a frame closed by taper hinge pin *a* and taper plug *b*; through two opposite sides the bushes *C* pass, which carry springs *K*

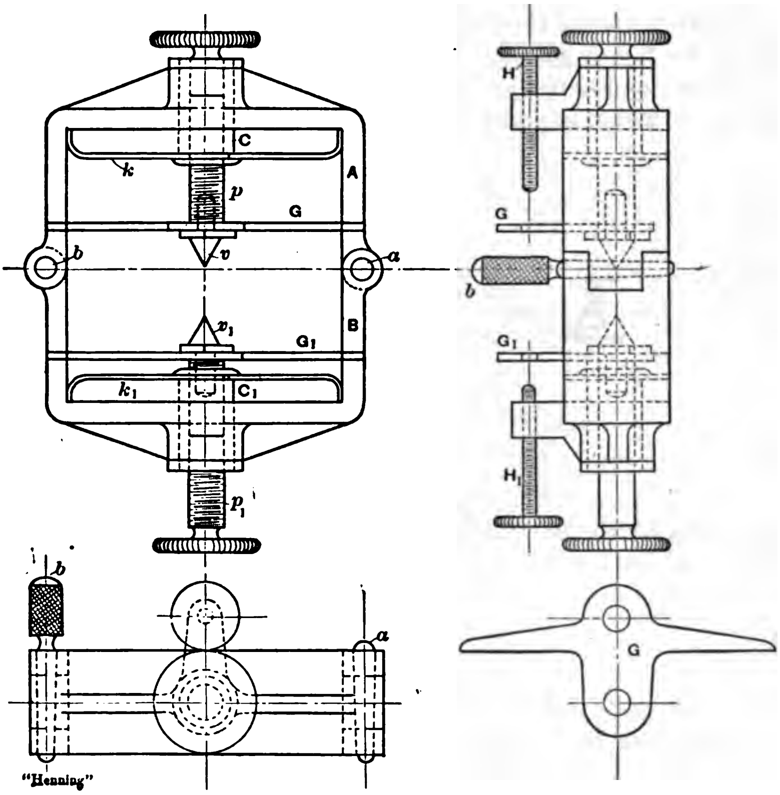

FIG. 284.

and K_1 at their inner ends, and are also tapped for the screws *p* and p_1, fitting nicely. These screws are shouldered at their inner ends to carry the steady-arms *G* and G_1, which are held in place by the nuts formed on the hardened points or knife edges *v* and v_1, screwed into the ends of screws *p* and p_1.

The frame *AB* also carries two pressure screws *H*, which are forced against the main springs *S*, bolted by the carriers *G*; these springs *S* carry the mirrors *M*, held by a yoke *Y* at their upper ends. This yoke Y bears on a dished spring washer, against which it is forced by the nut at the top (Fig. 285).

The mirrors M are mounted on one end of the spindles and balanced by small weights at the other (Figs. 286 and 287), the spindles passing through clearance holes in the yoke Y and the knife edges D. A groove is provided in the back of the yoke, to guide one knife edge, which is also supported by the small screw a. The free edge of the knife edge bears against the piece of material under investigation. The mirrors must have motion in two directions, and hence are carried by two points P and P_1 in the frames F, which support them, and about which they are made to revolve by the winged nut R bearing against the edge of the mirror, which is held in position by the spring T. The mirrors with their frames F also revolve about the spindles.

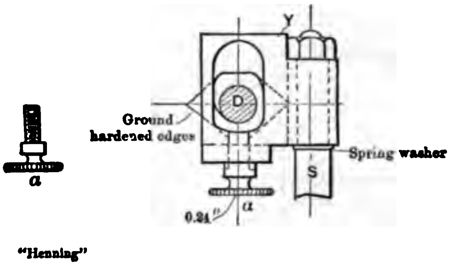

FIG. 285.

APPLICATION.

The screws p and p_1 are adjusted so that the points v and v_1 are separated by a distance equal to the thickness of the material to be investigated, less $\frac{1}{4}$ inch. Then the frame AB having been opened, is placed around the material, which has previously been put in the position desired, the frame is closed, and the taper plug is put in its place. Closing the frame AB requires some pressure, which causes the springs K K_1 to flatten and the bushes to recede in equal amount, thus securing the frame firmly to the material. As the material when under stress changes its dimensions, the points v and v_1 must follow them without allowing the frame to shift; hence the necessity of these spring-cushioned screws p and p_1, carried by the bushes sliding in the frame.

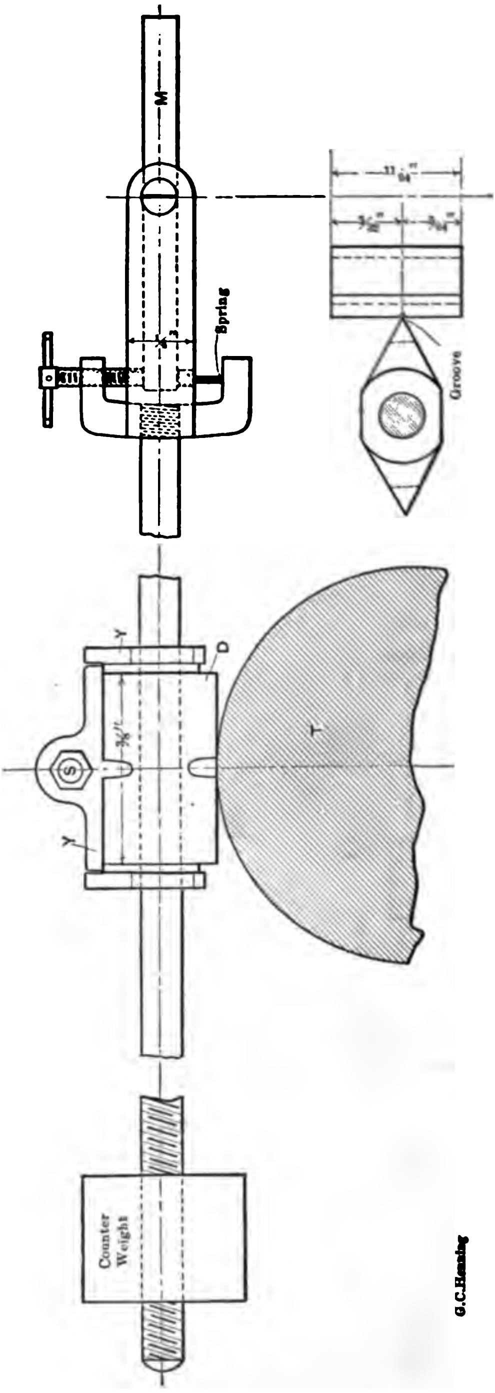

FIG. 286.

G.C.Henning

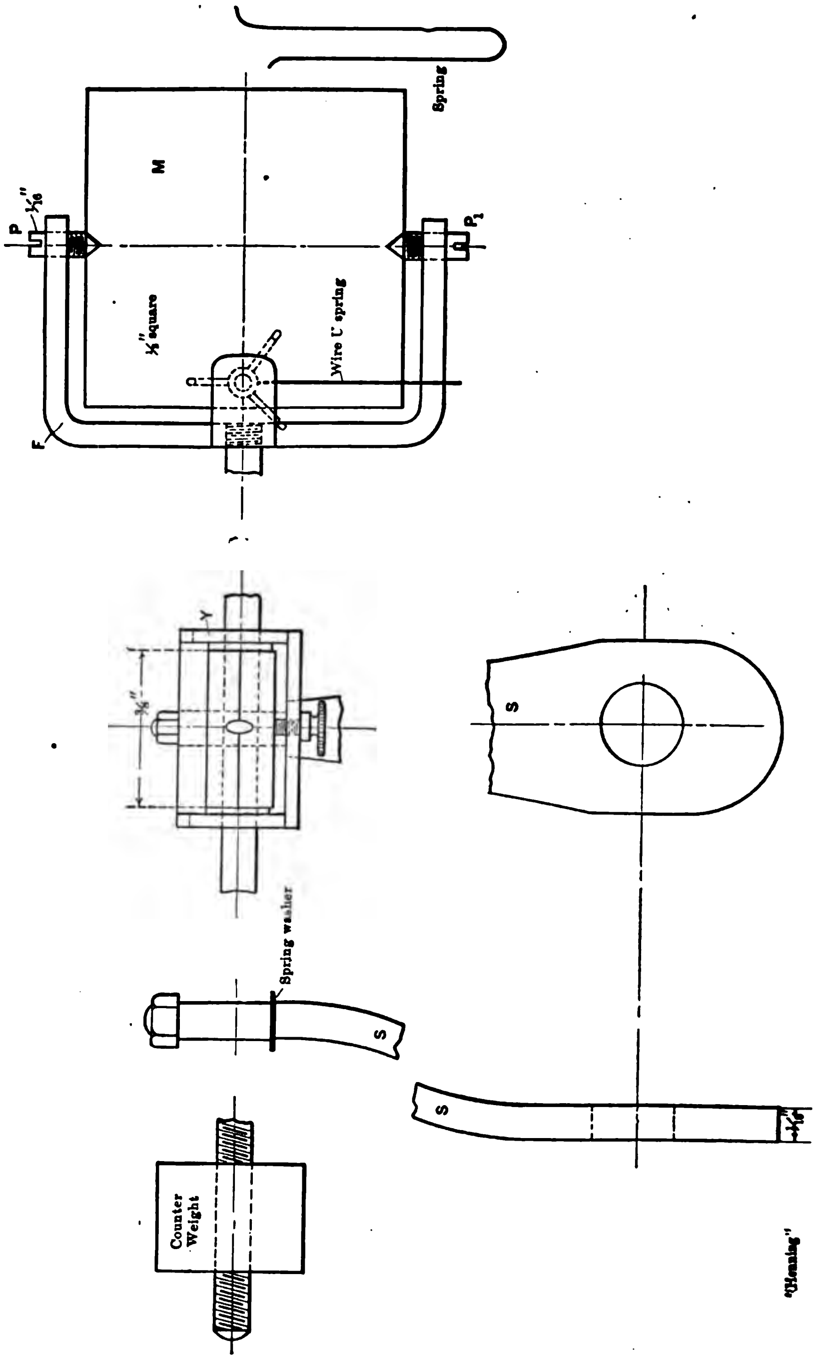
Spring
M
P
1/16"
P1
1/8" square
Wire U spring
a
F
Y
3/8"
S
Spring washer
S
Counter Weight
S
1/16"
"Hanging"

FIG. 287.

The mirrors are then adjusted by bringing the knife edges to bear against the material, in the groove in yoke *Y*, also on the screw *a*. Now the screws *R* are used to revolve the mirrors until the images of the scales, each mounted exactly five feet from the reflecting surface, are reflected side by side into the telescope, which has previously been levelled up. Now the screws *a* are released, after having applied the pressure screws *H* to the springs *S*, and the instrument is ready for use.

It will be noticed that the mirrors revolve in opposite directions, being applied to opposite sides of the material; hence the scales are mounted so that while one reads up, the other reads down. Hence when taking observations the reading on both will be increasing or decreasing. As the material is strained the images of the scales pass by the cross hairs in the telescope, and readings are taken as often as desired.

It will be noticed that as the spindles pass through clearance holes in the yoke the knife edges are free to move in either direction. Their only support is against the yoke at one edge and against the material at the other, and with a constant pressure of the spring *S*.

As the mirrors can revolve in either direction with perfect freedom and accuracy, the instrument is equally applicable in measuring extension or compression.

It will be understood, however, that the instrument is in any case to be used only for elastic deformations or changes of length, as any greater changes place the readings beyond the limits of the scale, or might cause slip of the knife edges on the material.

As the scales are but 20 inches long they correspond to an actual change of length of $\frac{20}{500} = .04$ inch; but as such change of length is always beyond the elastic limit, up to which point alone accurate measurements are desirable or possible, the instrument answers all purposes for which it was designed.

DISCUSSION.

Prof. Thomas Gray.—I think that the remark which was made a little while ago applies to this paper—it does not need any discussion. Yet I think we ought not to allow it to pass without in some way expressing our appreciation of the very great pains Mr. Henning has taken in introducing this very beautiful apparatus. I am myself very much interested in the subject, and have spent a great deal of time in devising apparatus of this character, and I appreciate very much the assistance which Mr. Henning has given. The only suggestion I should like to make, as a possible simplification, is that he try to modify the arrangement so as to combine the two beams of light so as to require only one reading.

DCCXXXVIII.*

ELECTRICITY VERSUS SHAFTING IN THE MACHINE SHOP.

BY CHAS. H. BENJAMIN, CLEVELAND, O.
(Member of the Society.)

THE trend of the discussion on a paper entitled "Friction Horse-Power in Factories," presented at the December meeting of the Society, has suggested the presentation of this paper.

It seemed to be the opinion of many of the members who took part in that discussion, that the best solution of the problem was to "take the bull by the horns" and throw him out of the arena altogether; in other words, to displace shafting and belts by electric transmission rather than to try to improve their efficiency. That in many cases this is the true solution can scarcely be doubted; but it seems to the writer that there are considerations of more importance than mere economy of transmission.

In order to put this in concrete form, twelve establishments mentioned in the previous paper have been selected, the numbers from one to six inclusive representing establishments using heavy machinery, and the numbers from seven to twelve representing light-machinery establishments.

In Table I. the data are taken from the preceding paper, while the results in Table II. are calculated.

The cost of the shafting in column 1 of Table II. includes the cost of probable hangers, couplings, and pulleys, and is based on the actual price of similar shafting in a modern shop, the cost ranging from $2 to $6 per linear foot.

The cost of the belting assumes the belts to have been from 30 to 50 feet long, and of single leather, and varies from $6 to $27 per belt for the widths given.

---

* Presented at the Hartford meeting (May, 1897) of the American Society of Mechanical Engineers, and forming part of Volume XVIII. of the *Transactions*.

TABLE I.

	1	2	3	4	5	6	7	8	9	10
NUMBER.	Total Line Shaft in Feet	Diameters of Line Shafts, Inches.	Number of Belts.	Average Width of Belts.	Number of Machines.	Number of Men.	Total Horse-Power.	Horse-Power to Drive Machines.	Horse-Power to Drive Shafting.	Useful Horse-Power per Machine.
1	1,130	2¼ 2¾ 4 6	89	4	.....	......	409	243	157	......
2	580	3 3½	28	6	18	78	74	17	57	......
3	580	2½ 3	53	5½	43	152	38.6	13.3	25.3	.310
4	1,460	2½ 3 4	92	4½	69	80	59.2	11.3	47.9	.164
5	1,120	3	141	4	68	300	112	48	64	.707
6	1,065	2 3 4	192	4	123	225	168	77	91	.627
7	748	1½ 1¾ 2 3	217	3	250	200	49.4	19.7	20.7	.790
8	500	2 3	335	3	313	226	74.3	34.3	40	.109
9	990	1¾ 2½	217	3	258	100	47.2	22.7	24.5	.881
10	2,490	2 6	521	3	454	400	190	82	108	.180
11	1,472	2 3 4	484	3	179	350	107	32.5	74.5	.181
12	1,800	2 2¼ 2½ 3	486	3	428	320	241	127	114	.296

TABLE II.

	1	2	3	4	5	6	7	8
NUMBER.	First Cost of Shafting and Belting.	First Cost of Generator and Motors.	Difference in First Cost.	Horse-Power Lost by Electric Transmission.	Horse-Power Lost by Shafting Transmission.	Net Saving by Electricity, Horse-Power.	Saving in Dollars per Year.	Pay Roll per Year (Estimated).
1	......	....	....	121	117	No gain.	......	....
2	$3,650	$7,150	+ $3,500	9	49	40	$2,400	$39,000
3	3,750	3,000	— 750	7	21	14	840	76,000
4	7,450	2,100	— 5,350	6	42	36	2,160	40,000
5	7,700	7,000	— 700	24	53	29	1,740	150,000
6	8,550	10,950	+ 2,400	39	74	35	2,100	112,500
7	2,700	4,300	+ 1,600	10	16	6	360	100,000
8	4,000	7,000	+ 3,000	17	32	15	900	113,000
9	4,000	5,000	+ 1,000	12	20	8	480	50,000
10	9,650	18,000	+ 8,350	41	89	48	2,880	200,000
11	7,550	7,000	— 550	16	64	48	2,880	175,000
12	8,400	25,000	+ 16,600	64	90	26	1,560	160,000

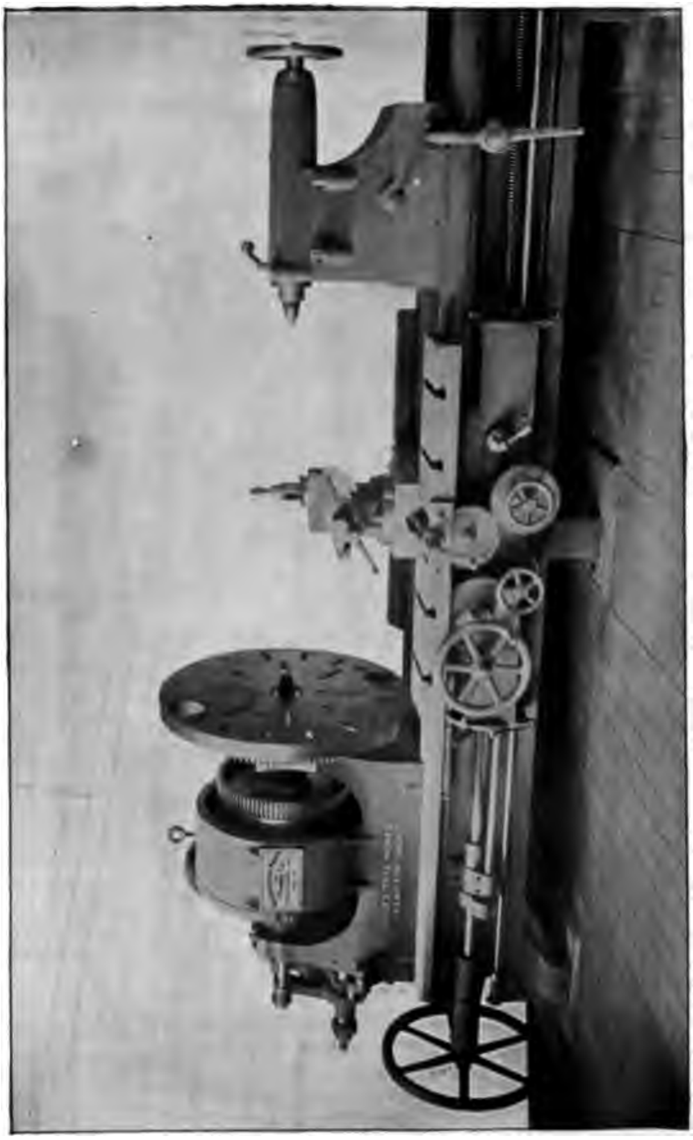

Fig. 288.

Fig. 289.

It is not claimed that the figures given in this column represent the exact cost of shafting and belting, but they show what the cost might well be in such establishments.

In estimating the cost of generators and motors for these same shops, it is assumed that a generator will be required having a power 50 per cent. greater than the net power used by the machines when the shop is running at full capacity, and that the aggregate power of the motors should be double this. It is further assumed that the motor unit will be from 5 to 10 horse-power in the shops doing heavy work, and not less than 2 horse-power in the shops doing light work. The cost of electric motors may be roughly classified as follows:

Horse-Power of Motor......	2	3	5	10	20	40	50	65	75
Cost in Dollars per H. P.....	65	60	45	35	25	20	17	16	15

The figures in column 2 of Table II. thus show what might reasonably be expected as to the cost of generators and motors for each establishment. No account has been made in the one case of the cost of countershafts and secondary belting, nor in the other of conductors, switches, and such countershafts as might be used, one omission being allowed to offset the other.

Column 3 shows the differences between the values in the two preceding columns, the + sign indicating greater first cost for electricity, and the — sign greater first cost for shafting transmission. It will be noticed that in general the electrical transmission has the greater first cost, but in establishments where the amount of shafting is out of all proportion to the useful work done, electricity has the advantage even here. (See shop No. 4.) In shops like Nos. 10 and 12 the machinery is compactly arranged and the cost of shafting relatively light.

If there is any unfairness in the above figures, it is in overestimating the electrical cost, since the writer desires to be conservative.

The figures in column 4 of Table II. are derived from those in column 8 of Table I. by assuming a combined efficiency of two-thirds for generators and motors. The power lost in shafting transmission, column 5 of Table II., is obtained from column 9 of Table I., by deducting ten per cent. of gross horsepower for engine friction.

The net gain in horse-power by using electric transmission is shown in column 6. Allowing $60 per horse-power per year as the gross cost of power delivered, we obtain the results in column 7 for the saving in dollars per year.

Some one may object that these calculations are rough, and based on insufficient data. Even if we admit this, two facts can still be regarded as proven :

1. That the first cost of electrical machinery is usually greater than that of shafting and belting.

2. *That the saving in power in most machinery establishments would pay for the additional cost of the electric plant in from one to five years.*

Figures of this kind are about all that we can have to guide us at present. Statements from manufacturers are liable to be influenced by a personal bias one way or the other; and even where there is an opportunity for a fair comparison, the necessary data are usually lacking. Many cases could be cited where parties now using electricity claim an actual saving in coal burned of from 15 to 30 per cent.

In most establishments where electricity has been introduced the transition has only been partial, the generator and motors being burdened with a load of shafting and belts which prevent any saving in power from being effected. It is in new shops constructed with especial reference to electric transmission that we are to look for the best results in efficiency.

It is further to be remembered that the loss of power from shafting and belts is constant as long as the engine is running, whether one machine or a hundred be in operation, while the loss in electric transmission is a per cent. of the actual power used, and diminishes as the consumption of current diminishes. This is particularly important during times of business depression, when only a part of the plant is in operation.

Some space has been devoted to considering the question of relative first cost and efficiency, since many arguments pro and con have hinged on these two points.

Electricity should not base its claims to recognition on either of these. In most cases there are far more important advantages to be considered. Referring again to Table II., it will be noticed that in column 8 are given the estimated pay rolls of the different establishments, allowing $500 per annum for each man employed. Notice how large these numbers appear in contrast with those we have been considering. A saving of from two to five per cent. in the pay roll is of more importance than any saving which is likely to be effected in the power plant.

The average useful horse-power per man in the heavy machinery establishments before mentioned was 0.38 horse-power, representing $22.80 per year on the usual estimate of $60 per horse-power per year. If the services of the man are set at $500 per year, a low figure, the average cost of power is only 4½ per cent. of the cost of labor.

In the light machinery establishments the average useful horse-power per man was only 0.195 or $11.70 per year; being only 2¼ per cent. of the labor cost.

In some shops the power cost represents only about one per cent. of the total expense of running.

The question of the advantage of introducing electricity hinges not upon efficiency of transmission, but upon the effect on the output of product per man and per machine.

The different points to be considered in determining how electricity affects general economy of production may be classified as follows:

1. General arrangement of machinery to facilitate handling of work.
2. Clear head-room for the use of electric cranes and small hoists.
3. Light and cleanliness.
4. Control of speed.
5. General flexibility of the system.
6. Use of electricity for other purposes than power.

1. *General Arrangement.*

The ordinary machine shop of to-day, in its shape and size and in the general arrangement of its engines and machinery, is the slave of shafting transmission. The engine must be so located as to connect conveniently with the shafting; all the machines must be arranged in parallel lines, for the same reason; while the ceilings and posts must be designed with special reference to the demands of hangers and brackets. This has been so long the case, that perhaps we hardly realize the possibility of a change.

Machinery should be arranged with reference to the work it is to do, and not with reference to the power to be used; it should be so located on the floor of the shop as to be easily accessible for operation and attendance, and in such a way that the work may be readily handled and well lighted.

The whole shop should be planned with a view to handling the product with the least waste of time and labor, and electricity makes this possible. Large machines may be put in any position and at any angle, or, if need be, may be transported from place to place to accommodate the work. The power plant may be located in the most favorable place for taking care of coal, water, and ashes, and the power distributed to any building or buildings, with but little loss.

2. *Clear Head-room.*

In all shops doing heavy work, the rapid and economical handling of the work is one of the most important factors in cheap production.

The electric crane is the most convenient and efficient carrier yet developed, and the absence of overhead shafting and belts in electric transmission makes its use possible over all the larger machines. The writer believes that small electric hoists will also take the place of hand hoists over smaller machines, until every machine in the shop can be reached in this way when desired.

This advantage of the electric system was what prompted its introduction into the Baldwin Locomotive Works, and the saving there has been notable. Formerly from 30 to 40 laborers were employed to handle the work in the wheel-shop, while now only 8 or 10 are needed; formerly from 8 to 10 per cent. of the time of the skilled help was lost from delays in handling, but this loss has been reduced to less than two per cent. A saving of this kind is of more importance than any probable saving of coal.

3. *Light and Cleanliness.*

As another result of our long subjection to ordinary methods of conveying power, we have come to regard a machine shop as necessarily dark, a synonym for all that is black and dingy. A glance at the shops of some of our electrical establishments will convince any one that this is a mistake.

Shops like those of the Crocker-Wheeler Co., the Westinghouse Co., etc, have been called "show places;" but at least they *show* the way from darkness into light, and should receive credit for it.

The belt is a dust carrier as well as a power carrier, and nothing can be kept clean in its vicinity. When we add to this the shadows cast by the shafts and belts themselves, we have a condition of things which tends to mistakes and poor work, and cannot be without a corresponding moral effect on the workman.

The writer saw, during the winter holidays, in one large establishment having the usual maze of countershafts and belts, an attempt to whitewash ceilings and walls, which was almost pathetic in its absurdity.

The partial or entire absence of overhead belts, and the diffused light reflected from whitewashed ceilings and walls, will cause an improvement in both quantity and quality of output which will prove a strong argument for electricity.

4. *Control of Speed.*

One of the minor advantages of direct-connected motors on large machines is the possibility of easily and quickly adapting the speed of the machine to the kind of work being done. On large boring mills and lathes, especially when facing up work, this may be a factor of considerable importance in determining the cost of production.*

5. *General Flexibility of the System.*

The ease with which the electric system of transmission may be adapted or extended is one of the strongest arguments in its favor. The extravagant consumption of power, as noted in the former paper, is probably due, in most cases, to a gradual extension of the shafting system by lengthening shafts beyond a reasonable limit, to the turning of corners with bevel gears, and to the use of turned and twisted belts, with their attendant evils in the way of guide pulleys.

Shops are usually planned with a view to present needs rather than future possibilities, and extensions are made at some disadvantage; but in the electrical shop this need cause no uneasiness. Whatever the location or the angular position of the new building, the only expense is that of new motors and a few hundred feet of wire.

---

* See article by Mr. W. E. Hall in *Cassier's Magazine* for February, 1895.

If added experience shows the desirability of rearranging any part of the original plant, there is nothing in the way. If at any time the mountain declines to go to Mahomet, Mahomet can easily be moved to the mountain, in the clutches of an electric crane.

6. *Other Uses of the Electric Current.*

If the right kind of an electric system be chosen, the same current can be used in a variety of ways which are just beginning to be appreciated. Besides the advantage of having arc and incandescent lamps without any additional expense for generators, the electric current may be used for welding, brazing, soldering, annealing, and case-hardening, and each and all of these operations may be effected locally on large machines without moving them from their positions.

Some are inclined to look askance on electric motors, and to have doubts as to their durability and freedom from accident. To the ordinary manufacturer and superintendent the electric motor is something that he does not fully understand, and, consequently, something to be distrusted.

An electric motor, if properly designed and constructed, requires no more care than any piece of machinery running at the same speed. The writer has had under his personal observation motors which have run for years whenever called on, have required less care than an ordinary loose pulley, and have cost almost nothing for repairs.

Only lately the writer saw a railway motor driving a grinder for pulverizing furnace linings, in an atmosphere so full of grit and dust that the operator had to keep his mouth and nose masked. The motor under a street car will convince the most superficial observer that there is nothing to be feared on this score.

It is difficult to get reliable and precise data from actual examples, even from establishments where both kinds of transmission have been tried; but the almost universal testimony of such is that the new experiment is a success, that they would not go back to the old system, and that as rapidly as possible the electric system will be extended to all parts of the works.

The writer has recently visited several establishments in Cleveland where electricity has been introduced to a greater or less extent.

The works referred to as No. 5 in the preceding tables have, within the past year, been partially equipped. An electric plant has been put in, consisting of a 150-kilowatt generator, belted from the engine, and furnishing a direct current of 220 volts to various motors and to arc and incandescent lamps throughout the buildings. The motors are mostly shunt wound, self-regulating, and vary in capacity from 3 to 15 horsepower.

Owing to the arrangement of the buildings, it had formerly been necessary to run line shafts at right angles, and use quarter-turn belts and guide pulleys. Some of the motors are now used at the angles to do away with the belts, but in general the shafting itself has not been disturbed, and consequently much of the loss due to shafting transmission remains.

In other instances independent motors are used to drive large machines, or groups of machines. When there is much dust, as in the case of emery grinding, the iron-clad motor is used. Although this can be called but a partial trial of the electric system, and has many of the disadvantages which could be avoided in a new installation, the experiment is so far a success, and will be extended as fast as practicable.

Through the courtesy of Mr. Bartol, a member of the Society, and superintendent for the Otis Steel Company of Cleveland, the writer was permitted to inspect the works of the company, where a new electric plant is being installed. The company have used electricity to a limited extent for some time, and the present installation is intended to concentrate and unify the plant. As the works are distributed over an area of about fifteen acres, and as the work is nearly all of a heavy nature, the wisdom of the change is apparent.

The central plant will contain a 165-kilowatt generator direct connected to a compound condensing engine, and a 75-kilowatt generator belted from a simple condensing engine, both generators furnishing current to the same circuit.

Either or both of the generators can be used, according to the amount of current needed. A direct current of 220 volts will be used for both light and power, the arc lamps being in series of four and the incandescent lamps in series of two. A central distributing tower is erected over the generator, from which overhead wires radiate to all parts of the works. Separate wires are run for the lighting system, in order that the lights

If added experience shows the desirability of rearranging any part of the original plant, there is nothing in the way. If at any time the mountain declines to go to Mahomet, Mahomet can easily be moved to the mountain, in the clutches of an electric crane.

6. *Other Uses of the Electric Current.*

If the right kind of an electric system be chosen, the same current can be used in a variety of ways which are just beginning to be appreciated. Besides the advantage of having arc and incandescent lamps without any additional expense for generators, the electric current may be used for welding, brazing, soldering, annealing, and case-hardening, and each and all of these operations may be effected locally on large machines without moving them from their positions.

Some are inclined to look askance on electric motors, and to have doubts as to their durability and freedom from accident. To the ordinary manufacturer and superintendent the electric motor is something that he does not fully understand, and, consequently, something to be distrusted.

An electric motor, if properly designed and constructed, requires no more care than any piece of machinery running at the same speed. The writer has had under his personal observation motors which have run for years whenever called on, have required less care than an ordinary loose pulley, and have cost almost nothing for repairs.

Only lately the writer saw a railway motor driving a grinder for pulverizing furnace linings, in an atmosphere so full of grit and dust that the operator had to keep his mouth and nose masked. The motor under a street car will convince the most superficial observer that there is nothing to be feared on this score.

It is difficult to get reliable and precise data from actual examples, even from establishments where both kinds of transmission have been tried; but the almost universal testimony of such is that the new experiment is a success, that they would not go back to the old system, and that as rapidly as possible the electric system will be extended to all parts of the works.

The writer has recently visited several establishments in Cleveland where electricity has been introduced to a greater or less extent.

The works referred to as No. 5 in the preceding tables have, within the past year, been partially equipped. An electric plant has been put in, consisting of a 150-kilowatt generator, belted from the engine, and furnishing a direct current of 220 volts to various motors and to arc and incandescent lamps throughout the buildings. The motors are mostly shunt wound, self-regulating, and vary in capacity from 3 to 15 horsepower.

Owing to the arrangement of the buildings, it had formerly been necessary to run line shafts at right angles, and use quarter-turn belts and guide pulleys. Some of the motors are now used at the angles to do away with the belts, but in general the shafting itself has not been disturbed, and consequently much of the loss due to shafting transmission remains.

In other instances independent motors are used to drive large machines, or groups of machines. When there is much dust, as in the case of emery grinding, the iron-clad motor is used. Although this can be called but a partial trial of the electric system, and has many of the disadvantages which could be avoided in a new installation, the experiment is so far a success, and will be extended as fast as practicable.

Through the courtesy of Mr. Bartol, a member of the Society, and superintendent for the Otis Steel Company of Cleveland, the writer was permitted to inspect the works of the company, where a new electric plant is being installed. The company have used electricity to a limited extent for some time, and the present installation is intended to concentrate and unify the plant. As the works are distributed over an area of about fifteen acres, and as the work is nearly all of a heavy nature, the wisdom of the change is apparent.

The central plant will contain a 165-kilowatt generator direct connected to a compound condensing engine, and a 75-kilowatt generator belted from a simple condensing engine, both generators furnishing current to the same circuit.

Either or both of the generators can be used, according to the amount of current needed. A direct current of 220 volts will be used for both light and power, the arc lamps being in series of four and the incandescent lamps in series of two. A central distributing tower is erected over the generator, from which overhead wires radiate to all parts of the works. Separate wires are run for the lighting system, in order that the lights may be controlled from the central station. Ammeters on each line show the relative amounts of current taken by each shop and by the lighting system. The switch-board is also provided with those very important safety valves, automatic circuit breakers. Mr. Bartol determined the amount of current which would be needed in the different shops by a method which is to be recommended to all who anticipate such a change.

Indicator cards were taken from the engines when driving the shafting, and when driving the different machines, and the different shops, and from these cards the necessary capacity of motors and of generators could be quite accurately calculated.

The motors are either shunt or series wound, according to the use which is to be made of them, and vary in capacity from 5 to 30 horse-power. The motors are in all cases belted to the machines or shafting and controlled by rheostats.

As a rule, no attempt has been made to displace shafting already in place, but the writer noticed two large roll turning-lathes driven by independent motors, one of 5 and one of 10 horse-power.

In the finishing room for steel castings, the machines are all arranged along the side of the room and driven by counters and line shafting attached to the wall, leaving clear head-room for the electric crane used in handling the work.

Electric cranes, both of the travelling and jib type, are in evidence throughout the works, and some portable machine tools are driven by independent motors. It is interesting to note that at this establishment the rival giants, electricity, compressed air, and hydraulic power, are working side by side, each in its own proper sphere.

At the new shops of the Atlas Bolt and Screw Co. of Cleveland, a two-phase electrical plant has lately been installed. The buildings in this case are located on three sides of a triangle, with the power house at one angle, a situation of things which almost precludes the use of shafting in the ordinary way. To the electric wires this makes no difference.

The machinery is mostly of the automatic type, arranged in groups, and running at a constant speed, a condition of things favorable to the polyphase system.

A 60 horse-power high-speed engine is belted to a 45-kilowatt two-phase generator and to a 15-kilowatt exciter. The exciter is made of this size in order to furnish a direct current for the lighting as well, the lamp system being thus entirely distinct from the power system. This use of the exciter is somewhat novel and interesting.

Motors are scattered throughout the works wherever needed, in sizes varying from 5 to 20 horse-power. They are in most cases hung from the ceiling at the same height as the shafting, so that the belts are horizontal. The motors are all of the induction type and entirely destitute of commutators or brushes, so that they require no attention, except to keep the bearings oiled. The motors can all be started at once from the engine-room, or each one separately by a switch.

No attempt has been made to do away with the line shafts and counters, as the nature of the machinery renders this impracticable, but the ability to run even remote sections of the shops independently of the remainder, as well as the entire absence of vertical belts through the floors, has been sufficient reason for the adoption of this form of transmission.

General Conclusions.

When the shops of a manufacturing establishment are scattered over a considerable extent of territory, the installation of a central power plant having large and economical engines, and the distribution of the power to the different shops by wires, instead of by steam pipes, is a change always to be recommended, and that will soon pay for itself.

When the establishment consists of one large building or compact group of buildings, a change to the electric system is to be recommended where heavy work is to be handled, especially if the machines are somewhat scattered, require considerable power, or are intermittent in their action. In such cases some of the shafting may be left in position, but the writer believes that the more independent motors are used on machines requiring over two horse-power the greater will be the economy.

In shops doing light work and having many small machines compactly arranged and in continuous operation, a change to the electric system would be expensive and of doubtful utility. See, for instance, shops Nos. 10 and 12 in tables.

In building a new shop the chances are better for electric installation ; and any manufacturer who does not, under these circumstances, investigate the subject and consider carefully the question of using electricity, is making a great mistake.

The ideal arrangement for a shop handling heavy work is that of a building having one lofty centre aisle lighted from above, and two side aisles of less dimensions lighted from the sides. Every square foot of floor space in the central aisle should be commanded by electric cranes. Here the larger tools will be located, each with special reference to convenience in handling work, and, as far as practicable, fitted with independent motors.

The smaller machines are located in the side aisles near the dividing line of columns, and may be driven in groups by short lines of shafting hung on the columns below the tracks of the travelling cranes, each line being driven by a separate motor.

Units of about five horse-power are large enough for this kind of work.

Motors of two or possibly of one horse-power are as small as can at present be economically used.

The benches for hand work should be located at the side walls near the windows. Smaller cranes and electric hoists may command all the space in the side aisles.

Some of the drills and shapers should be fitted with direct connected motors and have eye-bolts at the top by which they may be moved from place to place.

In the power house the use of two generators, one large and one small, will often prove economical, the smaller one being used for night or overtime work.

Polyphase and Continuous Current Systems.

The writer, as a mechanical and not an electrical engineer, hesitates to say much on this delicate subject. However, it is a question which must be settled at the outset in deciding upon the arrangement of a shop.

The great advantages of the polyphase or induction motors are in their simplicity, their freedom from rubbing contacts, and the constancy of their speed; the great disadvantage, the fact that the speed cannot be regulated, since the motor must always be in phase with the generator.

When electricity is to be applied simply to run line shafting and counters, and the speed of separate machines is to be controlled by the usual belts and gears, the polyphase system is entirely satisfactory.

On the other hand, when it is necessary to use independent and direct-connected motors on cranes and on machine tools, prompt and economical speed control is an absolute necessity; and it is here that the continuous-current machine has a great advantage. Without any prejudice, it is the earnest belief of the writer that the greatest advantages in electrical transmission are to come from the use of independent motors to the largest extent possible, and that the time will come when nearly every machine in the shop will have its own motor. Progress in this direction is slow, and the intermediate steps must be taken first; but when an electrician sneers at the use of direct-connected motors *per se* one cannot but suspect that it is only because he has not yet perfected a motor that will satisfy the requirements.

The principal difficulty in designing direct-connected motors for machine tools has been that of getting slow speed without great weight and of securing proper speed variation without seriously impairing the efficiency. The multipolar machine has helped to solve the former difficulty. In regard to the latter problem it may be said that the speed of the motor has usually been changed by introducing resistance into the armature circuit, thereby causing a loss of power corresponding to the reduction of speed.

Lately motors have been constructed with so-called commutating fields. The motor in this case has several fields wound in separate coils, and when a change in speed is desired these fields may be cut out one after the other.

If desired, a combination of this system with a resistance in the armature circuit may be used. The so-called Leonard system, having several feed wires carrying currents of different voltages, is, of course, somewhat expensive on account of the amount of copper used and the general complication of the system.

It is, however, very encouraging to note the improvements which are constantly being made in the construction of slow-speed generators for direct connection.

It is better in a paper of this kind to avoid mention of any particular firms. Suffice it to say that there are at the present time at least two firms of established reputation who are ready to supply slow-speed motors suitable for direct connection to machine tools and capable of almost any degree of speed regulation.

These motors can run at from 100 to 200 revolutions per minute and can be obtained in sizes of from one to five horsepower, while the guaranteed efficiency is from 70 to 80 per cent.

Until it shall be possible to do away with shafting and belts in situations where that is desirable, the problem is only partially solved.

The steps thus far taken in the direction of electrical transmission, while encouraging, can only be regarded as the beginning of a more radical change.

It is the hope of the writer, before another year, to make some experiments in establishments which have introduced electrical transmission, and to show more conclusively than has been done in this paper the economic advantages of the newer system.

DISCUSSION.

Prof. L. S. Randolph.—One of the most important advantages, if not the most important, of the independent motor system in shops to which the methods of electrical transmission lends itself is the facility with which rearrangement of shop tools can be accomplished. If the character of the work requires that the pieces should go on the lathe first, that tool can be placed first in the path of the work; and if another kind of work demands a different arrangement, it can be readily made. Where the belt and countershaft are used the machine, when once placed, usually remains there indefinitely.

The whole question, however, seems to be one the solution of which depends entirely upon the conditions surrounding each individual case.

A building, about a hundred yards from a boiler plant, required to be supplied with power; had that been all, a motor driven by electricity might have been used; but the building also required to be heated, and as it was perfectly feasible to get an engine which would require but little more attention than an electric motor, the ability to accomplish both results with one installation would more than compensate for the advantages any other system could offer. It is to be hoped that the excellent results obtained by the close competition in the electrical business will stimulate a more careful study of other methods of power transmission, for as yet, for the transmission of medium and high rotative speeds, electrical methods leave little to be desired except a lower first cost.

Mr. J. B. Stanwood.—I should like to say that in establishing generating plants for the transmission of power electrically manufacturers should not lose sight of the "steam end" of the problem. If an advantage is secured by reducing frictional loss in a given plant, care must be taken that the type of engine employed to drive a generator is not one whose economy is so poor, whose cost of maintenance is so great, and whose life is so short as to entirely neutralize the saving originally desired.

It would be useless to substitute for a good, slow-speed Corliss factory engine a high speed, short-stroke, automatic engine (directly connected to the generator), whose only advantage is its compactness, low first cost, and close regulation for such service.

I am of the opinion that slow-speed dynamos directly connected to some form of compound engine, capable of handling variable loads, so proportioned that the average load can be carried at a water rate not in excess of, and probably better than, that of good Corliss practice, is a type which will grow to be satisfactory and popular.

In this connection I would suggest the following speeds for different powers:

PROPOSED SPEEDS FOR DIRECT-CONNECTED FACTORY GENERATORS.

Rated Horse Power.	K. W. Capacity of Generator.	Revolutions per Minute.
100	66	225
150	100	200
200	135	175
300	200	150
400	250	125
500	300	100

A criticism of these speeds will be made on the score of cost. To such I can say that upon inquiry it will be found that very reliable slow-speed generators can now be purchased at but a slight excess in price over the more speedy machines.

Mr. Dan C. Woodward.—Mr. Benjamin says that, although his "calculations are rough and based on insufficient data," "two facts can still be regarded as proven:

"1st. That the first cost of electrical machinery is usually greater than that of shafting and belting.

"2nd. That the saving in power in most machinery establishments would pay for the additional cost of the electric plant in from one to five years."

In regard to the first cost I wish to bring out one or two points. The tests recorded in his table were made by taking indicator cards from the engine. First, the cards were taken with all the shafting and machinery running as usual; second, cards were taken with the engine running the shafting and loose pulleys only, and this last was called the friction load, and the difference between the two was called the useful load.

He then says that the friction load or loss of power due to transmitting it with shafting and belting is constant. From experiments made by myself on power transmission, as well as from a paper presented before the Society in vol. vii. by Mr. Wilfreed Lewis,* I am led to believe that the friction increases as the useful load increases, and is therefore a greater per cent. of the total load than is given by his table.

In making his calculations for the cost of dynamos and motors, so far as I can see he has made no allowance for decreased cost of engine and boilers, although he shows that the necessary power to drive a given plant will be from 40 to 60 per cent. less than with shafting and pulleys.

During the winters of 1893 and 1894 I made an extended series of tests, above referred to, at the shops of The Shaw Electric Crane Co. to determine the power required to drive machine tools under different conditions.

Tests were made with lathes, planers, milling machines, upright and radial drills, grinding machine, and a boring mill.

The tools for the lathes, planers, and boring mill were ground to known cutting angles upon a Gisholt Machine Co.'s tool grinder. Some of the machines were tested for efficiency of power transmission, and efficiency curves were made.

From these tests I learned that the loss of power between the main-line shaft and the cutting tool was much greater than I had realized, and I think that the builders of the machines would be equally, if not more, surprised.

If each machine tool could be designed with reference to being driven by a motor, leaving out all belts and using gears, and could the motor be designed by a competent machine-tool designer for the particular machine which it is to drive, the efficiency of power transmission for the machine and motor would be greatly increased.

The first cost, for instance, of a lathe and motor built together

---

* *Transactions* A. S. M. E., vol. vii., p. 549, No. 213.

would be little if any more than a lathe with its countershaft and cones, or at least there would be no more difference between the two than is at present found between two lathes of same nominal size built by different concerns.

For a number of years I have considered that the time would come when each machine in the shop would be run by its own motor. This is the ideal method of equipping a shop, and when manufacturers build machine tools, each with its own motor, so that those who desire may purchase them, the same result will follow as with cranes.

In 1889 the first three-motor electric crane was built, and for several years past the electric crane has practically displaced all other power cranes, and so it will be with shafting and belting.

While the cost of power for manufacturing in most concerns is small as compared with labor, still if there is any chance to save even a dollar for coal it should not be overlooked, and undoubtedly Mr. Benjamin is right in saying that the saving in power will pay for the change.

The best and most important point made by Mr. Benjamin is, that "the question of the advantage of introducing electricity hinges not upon efficiency of transmission, but upon the effect on the output of product per man and machine."

I have located, and assisted in locating, the machines in three different shops, and the trouble there experienced brought the subject of electric transmission most forcibly to my mind. I have often said, and firmly believe, that there should be some kind of an efficient hoist over every machine in the shop where work is to be handled weighing over 75 pounds.

At present this is not done, and cannot be without great expense so long as there are belts and shafting in the way.

Each machine driven by a direct-connected motor will, of itself, be more efficient of labor as well as power.

The shifting of belts from one cone step to another, the breaking and mending of belts and the waiting for it to be done, and the slipping of belts under heavy cuts, make the output depend upon belts and machine, and not upon the man who is running it.

The points which I have tried to make clear are :

1st. That the first cost of the complete plant with a given number of machine tools would be little if any more with electric transmission than with shafting and belts.

2d. That the cost of power will be less.

3d. That the efficiency of man and machine would be greater with motor-driven machines.

4th. That, in consequence of these three points, it follows that the product of the plant should cost less.

Mr. John B. Blood.—As a general proposition, it must be said that electrical operation of machine shops must obtain its benefit in spite of its greater first cost. In almost every case there are three transformations in electrical transmissions instead of one, as in the case of shafting and belts. In the latter there is only the loss in the shafting and its attached organs, whereas with electricity the power is transmuted first from mechanical energy to electrical energy, and then, with a slight loss in the main conductors, it is transformed back to mechanical energy, and the cost is to be distributed among those three units, which take the place of the single unit, if shafting and pulleys with their belting be called one.

If it should happen that the amount of shafting is unusually large, the first cost of the electrical system may run down to a point nearly equal to that of the other, but in general, if the shop is designed with reference to the transmissive plant, the electrical system will cost the more.

In the latter part of the paper the author proposes two generators, one large and one small. I am reluctant to make the statement as a general one, but it seems to me to be poor policy to use generators, or in fact any similar machines, of widely differing sizes. I know of several cases where a large and small generator were put in with the idea of using the latter for night work. It would have been a great deal better, in my opinion, to have put in three generators and to have made them all of one size.

Mr. A. W. Robinson.—Some four or five years ago the company with which I am connected erected a new plant, and at that time we made a complete investigation of this system of transmission of power. We felt unwilling to tie ourselves up exclusively to it without being sure that it would be entirely satisfactory. After making such investigations we concluded that we could do so with perfect safety. Our conditions were somewhat unusual, because we had to distribute our power to a number of different shops, and if we had adopted any other system it would either mean an independent engine in each or would be little if any more than a lathe with its countershaft and cones, or at least there would be no more difference between the two than is at present found between two lathes of same nominal size built by different concerns.

For a number of years I have considered that the time would come when each machine in the shop would be run by its own motor. This is the ideal method of equipping a shop, and when manufacturers build machine tools, each with its own motor, so that those who desire may purchase them, the same result will follow as with cranes.

In 1889 the first three-motor electric crane was built, and for several years past the electric crane has practically displaced all other power cranes, and so it will be with shafting and belting.

While the cost of power for manufacturing in most concerns is small as compared with labor, still if there is any chance to save even a dollar for coal it should not be overlooked, and undoubtedly Mr. Benjamin is right in saying that the saving in power will pay for the change.

The best and most important point made by Mr. Benjamin is, that "the question of the advantage of introducing electricity hinges not upon efficiency of transmission, but upon the effect on the output of product per man and machine."

I have located, and assisted in locating, the machines in three different shops, and the trouble there experienced brought the subject of electric transmission most forcibly to my mind. I have often said, and firmly believe, that there should be some kind of an efficient hoist over every machine in the shop where work is to be handled weighing over 75 pounds.

At present this is not done, and cannot be without great expense so long as there are belts and shafting in the way.

Each machine driven by a direct-connected motor will, of itself, be more efficient of labor as well as power.

The shifting of belts from one cone step to another, the breaking and mending of belts and the waiting for it to be done, and the slipping of belts under heavy cuts, make the output depend upon belts and machine, and not upon the man who is running it.

The points which I have tried to make clear are :

1st. That the first cost of the complete plant with a given number of machine tools would be little if any more with electric transmission than with shafting and belts.

2d. That the cost of power will be less.

3d. That the efficiency of man and machine would be greater with motor-driven machines.

4th. That, in consequence of these three points, it follows that the product of the plant should cost less.

Mr. John B. Blood.—As a general proposition, it must be said that electrical operation of machine shops must obtain its benefit in spite of its greater first cost. In almost every case there are three transformations in electrical transmissions instead of one, as in the case of shafting and belts. In the latter there is only the loss in the shafting and its attached organs, whereas with electricity the power is transmuted first from mechanical energy to electrical energy, and then, with a slight loss in the main conductors, it is transformed back to mechanical energy, and the cost is to be distributed among those three units, which take the place of the single unit, if shafting and pulleys with their belting be called one.

If it should happen that the amount of shafting is unusually large, the first cost of the electrical system may run down to a point nearly equal to that of the other, but in general, if the shop is designed with reference to the transmissive plant, the electrical system will cost the more.

In the latter part of the paper the author proposes two generators, one large and one small. I am reluctant to make the statement as a general one, but it seems to me to be poor policy to use generators, or in fact any similar machines, of widely differing sizes. I know of several cases where a large and small generator were put in with the idea of using the latter for night work. It would have been a great deal better, in my opinion, to have put in three generators and to have made them all of one size.

Mr. A. W. Robinson.—Some four or five years ago the company with which I am connected erected a new plant, and at that time we made a complete investigation of this system of transmission of power. We felt unwilling to tie ourselves up exclusively to it without being sure that it would be entirely satisfactory. After making such investigations we concluded that we could do so with perfect safety. Our conditions were somewhat unusual, because we had to distribute our power to a number of different shops, and if we had adopted any other system it would either mean an independent engine in each or the transmission of power to all these various shops by some method of mechanical transmission. So, instead of doing that we built a power house down in the end of the lot, and planned our works without reference to distribution of power in any way, and that enabled us to put our buildings just where we wanted them and to arrange them to best advantage. We are advocates of slow speed; consequently we employ a Corliss engine 16″ x 42″, running 80 revolutions, belted to the generator, which runs at 330 revolutions. I may say that after four years' experience we are entirely satisfied with the installation. We have not lost an hour from any fault of the electrical apparatus, and although we do not think it is quite as efficient for driving a machine shop as the old system, yet the advantages which we obtain in other ways are much more than sufficient to overbalance that. We think it is indispensable for use in our overhead electric cranes, and we also use it for arc and incandescent illumination. It is of especial advantage also in high-speed machinery and those machines which are used intermittently. We have some machines which we use only an hour or two a day. We have others which run at very high speed, and in these it is especially satisfactory; and last, but not least, the advantage which it gives us of being able to distribute the power wherever we want it and at any time we want it and at whatever speed we want it, leaves nothing to be desired.

Mr. H. H. Suplee.—The last speaker has emphasized a very excellent point—namely, that the different parts of an electrically driven plant can be designed without reference to the power transmission, because it is no more trouble to send the power around a corner than on a straight line. That brings up a fact which has often been impressed upon me—that most large establishments are not designed, they *grow*; and very often they grow along lines which cannot be very well controlled. A new building has to be put where there is place for it, and the result is that many of the transmissions in which much power is lost in the shafting-and-belting method are those in which the power has to be transmitted around corners and into places which would never have been deliberately planned. I think shafting and belting can be made very efficient when it is designed beforehand and everything is made to fit it. But the great advantage of the electric transmission is that it can be made to fit the situation, and in nine cases out of ten that is the problem with which we have to contend.

This question is often met when old machinery is to be replaced by more modern appliances, and the old transmission must be used to drive the new tools. The writer has met many examples of this in saw-mill work. The driving shaft of a band saw-mill is parallel to the motion of the log, while the shaft of a circular mill is at right angles to the ways. Whenever, therefore, a band mill is put in to replace a circular mill, something must be done to the heavy transmission plant beneath the mill in order to get the power around the corner. This has often led to the use of heavy bevel gearing or wide quarter-turn belts, and every one knows how undesirable either of these expedients is; and the only alternative has been to tear out the whole transmission plant. In some few cases independent engines have been used to drive the band mill.

If the mill is fitted with electric power, however, such changes can readily be made, and any desired rearrangement of machinery can be made without a thought as to the question of transmission.

Mr. H. C. Spaulding.—I would like to take issue with the gentleman's remarks as to the proper subdivision of the generating units.

Some years ago, when the state of the art was very different from its present development, it was undoubtedly good policy to have a number of comparatively small units, of which one or two at a time might be in the blacksmith's shop for repairs, without overloading the rest or seriously impairing the service of the plant.

At the present time, however, and in view of the reliability of properly designed apparatus, especially of the direct-connected type, there seems to be a disposition to adopt a few large units of like capacity, their size being dependent upon the extent and nature of the service to be performed, with one smaller machine for night work, and running special departments extra time when necessary.

In some cases where there is considerable load fluctuation during the day, one unit of an intermediate size is advisable, which may be combined with one or more of the larger units in such a way as to have each machine operating at nearly its most economical point. This arrangement is conducive not only to a saving in first cost, but to economy of operation.

The subdivision in smaller units was desirable a few years ago also to enable separate machines to be used for lighting and power service ; while improved designs have now made it entirely feasible to run lights and motors from the same machines and off the same service lines.

Mr. Jesse M. Smith.—I want to call attention to the question of economy in these plants. The average power plant will probably not exceed 200 horse-power, and for machine shops it will probably be considerably under that. I have made a number of tests as to the economy of these plants, and I have rarely found a plant having the generator directly connected to the engine from which an economy of over 600 watts per indicated horse-power was obtained. That represents a loss of about 20 per cent. between the cylinder and the brushes of the generator. In smaller plants, of about 100 horse-power, the net return will be still less, say 550 watts per horse-power. After the current is generated it is to be used in the motor. Here is another loss in general practice of 20 per cent., because the motors are rarely if ever run at their most economical point, and the result is that by the time the power is taken from the cylinder and applied to machine tool, there is a loss of anywhere from 30 to 40 per cent. That is probably not excessive, and a greater loss is often found in transmission by line shafts and belting. Of course the efficiency of these plants depends very largely upon the choice of the motor, the capacity of it, and the speed at which it is run. I think a great mistake is made in providing motors which are too large for the work which they have to do. I think this is also true as to the generators, and it is also true as to the engine which drives the generator. I think it is a mistake which is very often made to put too large an engine on to the generator. In its average work it is doing much less than its economical rating, and the generator is capable of greater overloading than the engine. In fact, with the modern generator there is no difficulty whatever in getting an overload of 100 per cent. if it is not kept on for more than five or ten minutes, but when an engine is overloaded 50 per cent. it is getting pretty well towards its limit. The same is true of motors. The motors can easily be run to over 100 per cent. above their general average rating, provided the current is not kept on too long. It is simply a question of heating the coils of the armature and field. In electric railway practice this question of over-engining the generators is more important still. I have made some tests on electric railway plants, and I have found that in small plants the maximum load on the generator is generally about three times the average load, and that the maximum load in the cylinder of the same engine will be only about twice the average load. That is because the electric load comes on so quickly and goes off so quickly in electric railway practice, that the sudden changes of load do not get past the fly-wheel of the engine. Here it becomes apparent that an engine which is designed for the maximum load of the generator is very much too great, so that an engine under these conditions is running at about one-third of its capacity or less during the average time, and that it will only be called upon to do its maximum work for short intervals. I say short intervals, because the load will very frequently vary in ten seconds from maximum capacity of the engine down to practically the friction load. Those, of course, are extreme cases, and they are not cases which would hold in manufacturing establishments where the load will be more nearly uniform. As to having very large generating units, I think it is a mistake. I think that the generating units should be divided into about three, so that two units can do the maximum work, and leave one spare; but one unit will generally do the average work. As to the speed of the generators, there is very little difficulty at present in getting multipolar generators which have a very moderate speed. There is no difficulty in putting them directly on to the shaft of a Corliss engine running at from 80 to 100 revolutions a minute. Of course the output of a generator is proportional to its speed, and if it is run at a higher speed more work can be taken out of it, directly proportional to its speed. But the cost of multipolar direct-connected generators nowadays is no more than the belted bipolar machines used to be, and in getting estimates for belted and direct-connected machines it has been my experience within the last year that the direct-connected machines are really the cheapest in first cost without regard to the engines.

Mr. William Kent.—Mr. Smith has just stated that a dynamo can be run as low as a Corliss engine on the same shaft; that is, 80 to 100, I understand. I would like to know what is the opinion of those experienced in Corliss engines as to what is the proper speed of that type of engine. It used to be considered that 60 was as fast as the Corliss engine ought to be run, and that the system of dash-pots and trip devices would not allow it to be run faster. Then it got to be 70 to 80, and then with some engines it got to be 100, while for nearly twenty years past a Corliss engine has been running at about 150 revolutions at Trenton, N. J. (see vol. ii., p. 71, of the *Transactions*). I would like to know if there is any reason to-day why we should keep the Corliss engine down to 80 revolutions.

Mr. John Fritz.—I would like to ask Mr. Kent why they ran the Corliss engine he speaks of at 150 revolutions.

Mr. Kent.—Because they had work to do which wanted that power.

Mr. Jesse M. Smith.—I can say this, that in getting estimates for power plants within the past year where the Corliss engines were obliged to compete with the high-speed engines, the Corliss builders have not hesitated to recommend a speed of 90 revolutions for engines of 400 horse-power. One of the prominent builders offered to go to a speed of 125 revolutions a minute, and give the same guarantees as to the life of his machine as the others, but he wanted a special price for doing it and special appliances for dropping his valves.

Mr. Fritz.—The speed depends a good deal on what it is applied to and on the circumstances surrounding it. If you want to drive a train of rolls *direct*, the engine must run a given number of revolutions per minute, and should be so designed. As to the engine at Trenton the reason for high speed was, as I understand it, that the engine was short of power, and they ran her up to get the power out of her that was wanted.

Mr. A. A. Cary.—I believe that Mr. William Sweet, of Syracuse, designed vertical engines of the Corliss type, having the old slipper motions, to run his rod mill. They were run at speeds of 125 to 150 revolutions, and have been operated very successfully at that speed for a number of years.

Mr. Francis Schumann.—I can throw a little light on this Trenton engine. I have often watched its performance with great interest, and have known it to run one hundred and sixty (160) revolutions. Considerable alteration of detail was necessary before this speed was attained with any degree of satisfaction, such as crank end of rod and valve gear; considerable repairs and renewals of parts were necessary about every two years, if I remember rightly.

The demand for this high speed was imperative, and the desire to use a high-standard engine naturally led to the Corliss, then one of the few engines of that class in the market.

Mr. William Hewitt, a member of this association, contributed a most interesting paper upon this engine some years since, which will be found in our *Transactions*.*

Mr. Thomas C. Perkins.—I would like to make a few remarks as to the present practice of speeds in operating Corliss engines. I have found that the same is, for large engines, for direct-connected electric railway service, fitted with the Corliss type releasing valve gear—from 80 to 100 revolutions per minute. Few Corliss builders recommend a speed of 125 revolutions, though in a few instances engines have been put in operation at this speed and over with fair results. Take the third rail power station at Berlin, which we are to visit to-morrow; there you will find two Greene engines running at a speed of 100. These, however, are hardly, strictly speaking, of the Corliss type. Speaking of the Corliss engines particularly, I know that the Rice & Sargent Engine Company, of Providence, have only recently started up with great success a large vertical Corliss cross compound engine of about 1,000 horse-power in a mill at Lawrence, Mass., which is coupled direct to the line shaft, at the other end of which is a water wheel. This engine runs at a speed of 160. However, the valve mechanism of the high-pressure cylinder is fitted with a steam-closing attachment, while the low-pressure cylinder has a fixed cut-off—regulated by hand. Through my connection with some of the largest engine builders, I feel safe in venturing to say that the general practice for operating Corliss engines for railway service is not over 100 revolutions. I am told, however, that the Allis Company are offering engines for this service for a speed of 115.

Mr. W. B. Smith Whaley.—I will not go into any particulars, but will simply make a few general remarks which may be of interest with regard to some experience which I have had in cotton mills driven by electricity.

I studied very carefully the figures of electrical driving, and at first thought that I could not afford to adapt it, because I could not convince myself that it was economical; but being met more than half-way by the company furnishing the current,

---

* "Continuous Rod Mill of the Trenton Iron Company." *Transactions*, vol. ii., p. 71, No. 25.

I was induced to adopt it as the motive power of one of my mills.

I have two mills operating the same amount of machinery as far as the power required is concerned; one with steam, the other with electricity, as motive powers. In the steam mill the cards from the engine show an average of 530 horse-power, and in the electric mill the meter shows an average of only 440 horse-power for the same work. There is a difference of 90 odd horse-power, a very remarkable showing in favor of that method of driving the mill.

The electric mill is arranged for motors of 150 horse-power each, and at present is divided into four units aggregating 600 horse-power, and I certainly thought that I would require as much power in one mill as in the other. There is a very remarkable gain shown in the electrical mill which is due to the method of operating it more economically with the subdivision of the power by motors; and this is shown very clearly on power curves which I am keeping from day to day at both mills.

The difference in the power required to drive the mills is greater than the amount ordinarily allowed for shafting and engine friction; but at present I am unable to state exactly where this is, but think it can be largely accounted for in shorter and lighter shafting and the absence of heavy belting, ropes, and cumbersome head gearing, together with engine friction.

I have been operating the electric mill for about six months, and the steam mill twice as long, and hope later to give more facts on the subject that will be of interest.

Mr. Oberlin Smith.—I think one of the most remarkable things for us to consider in general on this question is the present status of the question itself, compared with what it was five, six, seven years ago, or even two or three years ago. I know that for several years, even at the risk sometimes of being thought a little cranky, I have preached individual motors *versus* shafting, at first not with entire confidence in my own intuitions, but growing more confident all the time. It is not a matter of ancient history that in getting up in an engineering meeting to talk about motors *versus* shafting, one felt that he was the "under dog." It certainly seems to me, by the way the talk goes this morning, that the steam electricians—if I may call them so—who used to get up here and advocate shafting, and all that, are entirely absent, and if they were here would be "under dogs." The thing has turned around, and the unanimity of opinion in the paper itself, in the written replies to it, in all the verbal replies here, bearing all one way, is certainly remarkable—simply as showing the development of the idea of distributing our power in this beautiful and simple way, through wires running around corners, and up and down stairs and anywhere; enabling us to put our machines in any position; to control our power at any time, and not compel us to use it when we do not want to use it; to control our speeds, and to get such a large number of speeds on machines such as lathes and drills instead of the few we are now limited to. The whole movement is phenomenal. It is going faster than some of the most hopeful of us a year or two ago could reasonably have expected.

The objections still seem to consist chiefly of two things—the first cost of the plant and the cost of running it. It is true probably that the first cost is greater, but it is not nearly as great as it was a short time ago; and all of us who know something about manufacturing machinery with special tools on a large scale, know that motors suitable for driving lathes and drills and looms and other small machinery, motors all the way from one-quarter to ten horse-power, can be built as cheaply if they are built in quantities, after a while, possibly, as sewing machines and guns in proportion. At present we know they are not built that way, and this will account for the high cost. But with their further development and with the larger introduction of these motors the supply will come more cheaply as the demand increases, so that in a very few years it will become too little to be an important element in the question at all. Regarding the other matter of the cost of running, the relative amount of power employed by the two systems seems to me hardly worthy of consideration when applied to such places as machine shops. According to the author of this paper, Professor Benjamin, the power in a machine shop is from, say 2 to 5 per cent. of the cost of the labor, and only about 1 per cent. of the total expense. I do not know how near the figures are right. But supposing they are 100 per cent. wrong, supposing it is 2 per cent. instead of 1 per cent., supposing it is 3 per cent. of the total expense, what is such a small fraction of the whole expense of the shop? Is it worth considering whether shafting would be 2 per cent. and electric transmission 1, or shafting would be 1 per cent. and electric transmission 2, or anything of that kind? We do not care about so small an element. What we do care for is the great convenience and all the great advantages which the current-driven system has.

Something has been said here about the Corliss engine and the difficulty of getting high-speed generators directly connected. Of course we must not think of anything in the future but direct connection. We not only want to get rid of our belts to our individual machines, but at our generators. We do not want any more belt-driven generators. We want every one on the shaft of the engine, whether that shall be a Corliss engine running comparatively slowly, or whether it be a little "high-speed." In the former case all we have to do is to increase the diameter of our armature, as Ferranti did in his great plant in London, where he boldly jumped to 42 feet. This principle is, of course, easily applied, and only requires the electrical engineer to adapt himself to the circumstances and make his generator to suit his engine. The whole thing is evolving beautifully just in the right direction. On the other hand, if we are coming to steam turbines, which begins to look likely, all we have to do is to design our generators with small diameters to suit the tremendous speeds involved. We must, however, get rid of the fault of gearing down, and must run our turbines as slowly as needed for the highest speed of generator which is practicable.

After all this talk I feel a good deal happier in being prophetic than I used to. But we must remember the whole thing is still in a chaotic state. When we visit some of the "show-shops" referred to we are apt to be disappointed. We find short pieces of shafting and belting and then a motor on a machine, and then one belted to a machine. They are apt to say, rather conservatively, that they have not quite got to all individual motors yet. This will gradually take care of itself, and as the motors become adapted to their environments the belts will disappear. The trouble is, that in using a mixed system, they are trying to get the good of both systems and get a good deal of the bad of both.

To my mind the future ideal shop will be absolutely clear of shafting and belting, and the motors will be adapted to all the machines. Then we will have the benefit of bright light from above, entirely clear head-room, and overhead cranes everywhere. These will not, perhaps, be limited to as heavy a load as 75 pounds, as has been mentioned, but should be used for 50 pounds. Wherever a man has to lift 50 pounds and take it down frequently, he had better have a light electric crane especially adapted to the work than to waste time tiring himself out. The general advantage when we do have this electric current for the machines and cranes, and also for light, and possibly for heat, will be manifest; we will have a perfectly simple system driven by one generator at one speed near the centre of the plant, with wires radiating to outlying buildings and reaching all possible positions. A little incidental advantage in machine shops will be with planers, which will not have to stand all crosswise to the lathes, which are lengthwise. This new system does away with all that. We put our machines where we want, and set them diagonally or any other way, and we have everything at perfect command in regard to future changes of position.

Mr. Spaulding.—In 1890 a paper was presented on the adaptability and economy of electric motors for transportation purposes;* and the few enthusiasts in favor were quite thoroughly suppressed by the majority of the gentlemen present, the general feeling being that horses were much more economical than motors for running street cars on lines of considerable extent, while the possibility, or rather advisability, of equipping cars with motors for heavy service on long-distance roads was pronounced entirely out of the question. We know what has been done since the date referred to in this line of work; and I cannot help feeling that another nine years will show the present consideration of electric power transmission for manufacturing plants to have been somewhat akin to that of the Cincinnati meeting, so far as its prophetic character is concerned.

Referring to the tendency to provide generators of too large capacity in comparison with the engines operating them, Mr. Smith will be interested in a plant which has been recently put in operation, in which the engineers specified that the generators should have an overload capacity of 50 per cent. without sparking at the commutators. When the formal test was made, it was found impossible for the engines to carry more than 20 per cent. overload, so that in this case, at least,

---

* "Working Railroads by Electricity," by Willis E. Hall. *Transactions*, vol. xi., p. 89, No. 190.

there was no trouble about having engines too large in proportion to the dynamos. In this plant it is interesting to know that there are operated from one set of bus bars, at 220 volts, more than 1,000 horse-power of motors, ranging from 10 to 100 horse-power each, about 400 incandescent lamps, and 60 Manhattan enclosed arc lamps—there being no apparent fluctuation of the lights when the largest motors are thrown in or out of circuit.

The President.—I am pleased that Professor Benjamin does not take an extreme view, and that he sees more than one side of this subject of electrical transmission of power in machine shops. The question is one of great importance, the details of which must be settled by each manufacturer in accordance with the conditions which prevail in his own shop. Both sides of the question having been so well considered by Professor Benjamin, and in the discussion, we will trust that a wise conclusion may be reached by any manufacturer who is providing new means of transmission of power, or is anticipating the rearrangement of present devices. I am very glad that the question has been brought up and so fully discussed, and yet we cannot at this time reach a final conclusion which will apply in all cases.

DCCXXXIX.*

A METHOD OF SHOP ACCOUNTING TO DETERMINE SHOP COST AND MINIMUM SELLING PRICE.

BY H. M. LANE, CINCINNATI, O.
(Member of the Society.)

THIS subject was treated in a former paper, the principal object of which was to present and explain a tabular weekly or monthly statement by means of which the organization and expense of a concern can be kept in balance with production. The tabulation being based upon an annual estimate which, conditions remaining unchanged, affords a means of determining a selling price. The selling price as ascertained embraced, among other items, percentages added to labor and material sufficient to at once yield a predetermined profit. This use of percentages was not urged as being desirable, and they were used by way of illustration in explaining the central idea of progressive periodical tabular statements. With a view to conforming to the best practice of our largest and best shops in their methods of handling the details entering into the estimates and statements, information was asked from, and cheerfully furnished by, the heads of about forty concerns in different branches of the machine business in widely separated localities. By one it was suggested that this is a commercial and not an engineering question. But as a mechanical engineer without the commercial instinct would be unable to earn enough to pay his dues in this Society, it is assumed that all members in good and regular standing possess that instinct and consider the subject germane to the objects of our organization. It is gratifying to note that as a rule the larger and more prosperous the concern the greater the interest in the subject and the fuller the answers to inquiries as to their methods. One manufacturer relates that he can never reconcile the profit on any or all articles manufactured by his company as figured by their method and their bank account at the end of the year. Another incidentally proves in

---

* Presented at the Hartford meeting (May, 1897) of the American Society of Mechanical Engineers, and forming part of Volume XVIII. of the *Transactions*.

stating his method (?) that small work cannot be as cheaply produced in a large as in a small shop even when the general expense is already met by the large work. Another remarks as to determining selling price: "Oh, we let the other fellow do that." Subsequent inquiry, however, showed an accurate knowledge of the difference between the shop cost of the correspondent's goods and the "other fellow's price." The questions upon which information was sought might be considered delicate and rather as an intrusion into matters which might properly be considered confidential. Desire for anything of this nature, however, was disclaimed, and the belief stated that the fullest discussion and widest publicity given to accurate information of this nature could result in nothing but good to all manufacturers, benefit invested capital, and serve as a protection against competition based upon ignorance of cost in its broadest sense and in the long run. This view was acquiesced in, and it was admitted that the very best information on the subject is at least one possession, however dearly bought, that may safely be put in the hands of every competitor.

The following method is obtained by selecting and re-grouping from the best practice those features which seem most desirable. Shop cost is the sum of

1. Producer's labor;
2. Cost of material, including freight, hauling and waste;
3. Plant charge;
4. Burden.

The items producer's labor and cost of material require no explanation.

Plant charge is an hourly charge for machine tools independent of, and in addition to, the hourly charge for operator, and covers interest and depreciation on the value of the particular tool and the tool's share of the entire cost of power and power distribution, and in shops using tools varying greatly in size, value, power required, and amount of transmitting, machinery involved will be found to vary from less than one cent to over forty cents per hour. This hourly tool charge, when once established, is not likely to vary materially, and it is listed and used by the cost clerk in the same manner as the hourly rate of a workman.

The "burden," an appropriate term met with only in the reply of Fraser & Chalmers, is the sum of all expense chargeable to the shop except producer's labor and material. The total for any given period, divided by the number of producer hours for the same period, gives the hourly burden or the number of cents to be added to each producer hour. These four items give "the cost up to the office door," and to which is added a percentage covering all office expense, including advertising and other costs of selling. This, then, is the minimum selling price, the price of bare existence without profit, and to which finally a further addition is made, depending upon circumstances for profit. A slight modification, however, is practised by many, viz.: the adding of office expense to shop expense and including it directly in the burden. A refinement rarely practised distributes the burden unequally to departments as records or judgment warrants.

In no communication received is any reference made to a merchant's profit on material or merchandise. That this should be recognized and treated as a specific item seems reasonable. Another item not met with is interest on working capital. The large sums tied up in raw material, finished and unfinished work, and deferred payments, justifies a specific charge.

It would be interesting and profitable to devise a tabulated annual estimate by departments, and a monthly form of statement, by which actual and estimated receipts and expenditures by departments could be compared as the year advances, after a method similar to that described in the former paper referred to, but based upon the items and methods herein described.

The presentation by members, of any forms relating to this subject, would be thankfully accepted by many who are seeking to improve their methods.

DISCUSSION.

Mr. F. A. Scheffler.—I have not devoted any time during the last three or four years to this question, but I have been interested in doing a little dreaming about what would happen to some of the manufacturers of machinery in the line of engines, boilers, etc., and other heavy machinery, who wanted to go into the business of manufacturing electrical apparatus, not having had any previous experience in that line. There is one concern in particular which I have in mind. I told some friends about two years ago, when they were going to start in that line, that I would give them just about two years to wind up all the money which they had invested and some more, besides, if they did not look out very carefully to see that they did not apply to the cost of manufacturing electrical apparatus the same percentage of shop cost which they had applied in engines and in the heavy machinery which they were making. In about two years they reorganized and tried to get a million dollars more capital. They are now, I believe, manufacturing electrical apparatus of very fine quality, but they are still selling very much below other parties dealing in the same line of goods. But they have discovered evidently that they cannot apply the same shop cost used in manufacturing steam engines and heavy machinery to electrical manufacturing.

Mr. James Hartness.—This paper, presenting as it does the kernel of a voluminous correspondence, reduces to a few pages, by a hand that has long been recognized as one of America's ablest machine-shop managers, a matter of inestimable value.

I know of many who have travelled long distances to hear the discussion in and out of the meeting.

I wish to suggest one form of Mr. Lane's plan which seems to me most applicable to machine shops which build engines, or machine tools in medium sizes. Let the plant charge cover only the interest and depreciation on the machine tool used, and all the rest excepting selling expense go into the burden. The burden should also include depreciation on idle machinery and interest on all capital excepting that invested in active machinery.

The interest can vary from 3 per cent. upward, according to the risk of capital invested, and the depreciation from 5 to 50 per cent., according to the progress made by builders of more efficient machines.

Mr. Oberlin Smith.—It may be of interest for me to relate briefly a little experience in the way of getting at an expense account. We long ago, in the concern with which I am identified, gave up the idea of adding a percentage of total cost to labor and material, as some do, but always practised adding a fixed rate per hour of labor, no matter what priced labor it was, as others do. We simply take the total running expense, including 6 per cent. interest on total plant valuation, taxes, insurance, bad debts, advertising, travelling, salaries of non-producers, general depreciation, repairs, office expenses, fuel, oil, lighting, heating, etc., and make one expense account of the whole. This, divided by the total number of hours made in a year by all the producers, gives an expense rate per hour, which is added to each producing man's or boy's labor. It has usually proved to be 20 to 25 cents an hour in a shop having from 75 to 150 hands, but to make a safe rate we have been in the habit of calling it 25 cents an hour. The theoretical way is to take the last year's expense rate, as proved by statistics in the books, and use that for the following year. If it is a man earning 45 cents an hour, adding the 25 cents would bring it up to 70, etc.; but the average labor in ordinary machine shops is perhaps about 20 cents an hour. Adding to this 25 cents, brings it to 45. It may therefore be said that, including commercial expenses (where they are not excessive or remarkable in any way), the cost for each man, with the tools he uses, is about 45 cents an hour. Hence if we add about 10 per cent. profit, we get the traditional 50 cents an hour which the machinist is supposed to charge, and which customers, of course, growl at as a tremendous sum.

Mr. C. W. Hunt.—I wish to call attention to the defect in some systems of cost accounts which are now in use. Since 1890 I have paid greater attention to our cost accounts, at first using the ordinary method of adding a percentage to the cost of labor to cover the expenses of the shop. One of the early defects I discovered in the system was that we were not putting any percentage whatever on the raw material. This soon proved to be a serious defect, as our business is such that we frequently had orders for material which we purchased, and on which no work was done. This discovery resulted in modifying our accounts and adding to the purchase cost of the articles an amount which we estimated would cover the expense caused by them, such as receiving and storing them, issuing orders, and shipping them when sold, and interest during the time we hold them, so that if our business should gradually change from a manufacturing business to the supply of these articles on which we do no work, we would still be selling at a price which would pay the expenses of the establishment. We tried so to subdivide our total expense account that we could apportion to the materials the expense caused by their receipt, handling, and delivery, and the remainder to ordinary machine work, so that every division of our business will pay the expense which that part of the business costs.

I would be glad to furnish to any one who cares to look into the subject any information in my power as to our general method of cost accounts, and to furnish the forms which we have adopted.

Mr. Harry C. Francis.—I want to say one word on this subject. I represented for many years a well-known machine tool firm, and in their interest visited the leading manufacturing concerns throughout the world. Among other things, I was required to report upon the manufacturing cost, so far as it was possible to ascertain it.

When I engaged in business for myself, profiting by my experience, I simplified the cost question, and followed substantially what Mr. Hunt has just stated they have adopted.

First—A percentage was added to all purchases.

Second—An average rate was fixed for all labor of fitters and assistants.

Third—An average rate was made for all machining.

The total of these three represented factory cost, to which we added percentage for general expense and profit. This made our price.

With regard to the fact whether the articles would sell for this price, we were forced to do as has been stated in one of the papers read: "Let the other fellow fix the prices," and we came as near to them as we could. The fact remains that, following this simple, inexpensive, and accurate system of determining the cost, "we have lived and prospered."

Mr. Henry L. Gantt.—Mr. Hartness has brought up one very interesting question—namely, if you run a tool for only a few hours in the week, what are you going to charge for it? It is a little difficult to figure exactly what the price of the tool should be if you run it for only a small proportion of the time. It has been decided in several cases by taking the previous year's run, and figuring the expense of running the tool for the whole year, and then dividing it by the number of hours it ran, and fixing that as the rate per hour for next year. This is probably as accurate as any other method.

Mr. Oberlin Smith.—The tool might be running only one-tenth of the time. It would be occupying shop room. The shaft overhead would be running, grinding its energy into friction, and the tool would have to be looked after somewhat, and, too, it would be becoming obsolete. Such a tool costs a good deal more than one-tenth as much as a tool that is running a whole year. In the long run, I think, it is better to average things up all round and take one uniform rate, thus having the accounts as simple as possible.

Mr. H. H. Suplee.—This question brings to my mind the fact that sometimes you can elaborate your cost account system so much that its own cost becomes material, and that the expense of keeping these accounts is sometimes more than they are worth. There is one establishment of which I have heard where it is said they can tell you exactly what it costs for a man to go from a lathe to the grindstone and sharpen a tool; but the information costs more than the price of the tool. I think you must look out not to get into that error.

Mr. Gus. C. Henning.—I know of a case where the contract was let to five men, and the rate was one-eighth of a cent a man. The total value of the contract was five-eighths of a cent. That could not be carried on the books, so it was raised to one cent, and the contract was never turned in. I have it, and am going to furnish it to the Society. It is a well-known fact that in that establishment the cost of making out a contract ticket is probably five cents before it gets through the books and is accounted for at the end of the year. Therefore there is a net loss on that contract of four and three-eighths cents. The work was done, however.

The President.—I will quote what I heard one clear-headed manufacturer say on this matter of figuring the expense account, which is always a difficult one, for many a manufacturer thinks he is making money, while at the same time his bank account is being depleted, and in a short time bankruptcy stares him in the face. The manufacturer of whom I speak expressed it by saying he would "charge to the expense account everything for which he could not send a bill." Suppose a man came into your shop to get an hour's work done, if you figured by Mr. Smith's method there might be many things left out of the account, and the amount charged might be less than it really cost; but if you charge to your expense account all you cannot send a bill for, and add this to the time charged to the work, together with the stock and a fair margin for profit, you may—if you judiciously continue business on this basis—be able to take your family on occasional trips to Europe.

Let us for a moment see what, by this rule, must be charged to the expense account. First, all of the office salaries and expenses, to which you may add salaries of travelling men and all travelling expenses; next, go in the shop and charge salaries of superintendent, mechanical engineer, foreman, storekeeper, engineer, casting cleaners, helpers, and sweepers; to this long list we must add all supplies which are used up or consumed in the process of manufacture, such as coal, oil, waste, files, brooms, etc., not forgetting interest on investment, depreciation of plant, insurance, taxes, etc. The sum of all these items, kept for a year, make a total which, divided by the number of hours of actual *producers' labor*, gives the shop expenses per hour. This sum, added to average cost of producers' labor per hour, gives, as is evident, the cost per hour to the manufacturer.

I am confident, gentlemen, that any of you who have not kept accurate account of these items for a year will, on trying it, be surprised to see how much there is for which you cannot directly send a bill, all of which must be provided for in order to insure success.

Mr. Suplee.—I think you strike a most important problem, Mr. President. As a matter of fact, the real trouble with society at the present time is that the producers are carrying on their shoulders all the work for which we can send no bill, bearing all the expense of the non-producers, and that accounts for the disorganized social conditions all over the world—standing armies and the like.

Mr. Kent.—One of the rules for charges for any manufactured product is the rule of the railroads—charge all the traffic will bear.

Mr. Oberlin Smith.—The rate I spoke of, 25 cents an hour, the labor averaging about 20 cents, is pretty safe to run with under ordinary conditions. The matter the President mentioned about the items that you cannot send a bill for—they all come in that 25 cents an hour and are thoroughly covered by it. There is another thing which we ought to remember: It is not everything we send a bill for that we get money for. That is one of the reasons why, sometimes, these accurately kept accounts do not agree with the real statistics of the business. There are a great many things which have got to be put in an expense account, consisting of not only bad debts, which I have already included, but some apparently good debts with depreciated faces—where things come back to be repaired, or are remodelled for some reason, or are subjected to an afterward claimed discount, etc. These things depreciate the amount which one thinks one is getting.

Mr. Kent.—I wish to take issue with the statement that the selling price is the average cost. In the case of an article made by three manufacturers, costing them respectively 50, 75, and 100 cents, in dull times the average selling price will be about 95 cents. If one man makes it at a cost of a dollar, he will sell it at

95 cents for a while rather than stop his works and incur a greater loss. The man who makes it at a cost of 50 cents takes his profit of 45 cents and says nothing about it, while the average man, who is making it for 75 cents, is complaining of hard times and cut prices.

DCCXL.*

FLUE GAS ANALYSES IN BOILER TESTS.

BY R. S. HALE, BOSTON.
(Associate Member of the Society.)

I DO not lay any claim to being a chemist, but, as I have had some experience in the application of gas analysis to boiler testing, I have thought a description of a few of the devices and methods which have been found useful might be of value to the Society.

The importance of gas analysis in pointing out the reasons for good and bad performances in boiler testing is so well known that a description of methods which simplify the process of obtaining the analyses needs no apology.

The illustrative tests given in the appendix, two of which were made by Mr. Barrus, also contain information which I think is of value.

I am indebted to Mr. Barrus, to Professor Schwamb and Dr. Gill for many of the methods and devices described.

Place for Collection of Gases.

The most essential point is to collect the sample at the same place in the flue where the temperature of the gases is measured; and it is, of course, very desirable both to collect the gases and to take their temperature as soon after they leave the boiler as is possible, in order to avoid leakage of air and cooling by radiation.

In order to get a fair sample we must consider variations of composition at different points in the flue (local variations), and also at different times.

The local variations are not often caused by the difference of composition of the gases from different parts of the fire, since the gases are pretty well mixed by the time they have passed

---

* Presented at the Hartford meeting (May, 1897) of the American Society of Mechanical Engineers, and forming part of Volume XVIII. of the *Transactions*.

through the boiler. Instead, the variation in quality at different points of the flue generally arises from air leakage through the boiler setting or into the flue.

Hence, with many tubular boilers, vertical or horizontal, especially if provided with a tight iron flue, the gases may be collected at almost any point beyond the bridge; while with a water-tube boiler with brick settings considerable discretion must be exercised.

Having determined on the place of collection for any particular test, we may next consider

The Collection Pipe Inside the Flue.

This may be iron, unless the gases are hotter than 700 degrees Fahr. If they get hotter than that the iron affects the percentage of carbonic oxide, and either a porcelain, glass or platinum tube should be used, or a water-jacketed tube. The porcelain and glass are fragile, and the platinum expensive. I have used, when collecting gases just above the fire, a water-jacketed tube, brought to my notice by Dr. A. H. Gill, of the Massachusetts Institute of Technology. This, however, involves a current of water.

The collection of samples of gases above the fire, or at the bridge wall, in addition to the samples collected in the flue, gives important information as to the air leakage through the boiler settings, and is now common in European tests. It has also been done for some years in the boiler tests at the Massachusetts Institute of Technology.

If an iron tube is used, it is well to drill it full of small holes, not larger than ⅛-inch, but this is not necessary. Care must be taken when inserting it through the flue walls not to allow any air leakage at the point of insertion. A convenient method, if the flue be iron, is to drill and tap a ½-inch hole in the flue. Then take a ¼-inch pipe, cut a long thread on it, and screw it through a ½-inch by ¼-inch reducing coupling, and screw the latter on to a ½-inch short nipple. The collecting pipe may now be connected to the ¼-inch pipe, and the whole inserted into the flue and screwed into the ½-inch hole (see Fig. 290).

The ¼-inch pipe outside the flue is now connected to a metal pipe leading to a convenient place for the analysis. ¼-inch iron pipe may be used, but I generally prefer to carry around some

¼-inch lead or tin pipe, and to use that, as it is more convenient and the joints are safer. Lead pipe is the cheapest and easiest to handle, but it is rather heavy. Tin pipe, which costs rather more, is much lighter. I have used a small amount of it with success, and shall probably try it when the lead pipe needs renewing. Rubber pipe acts on the gases, and should not be used if lead or tin is available, but the joints between the iron and lead pipe, or between two pieces of lead pipe, may be made with ¼-inch rubber tubing. Such joints should be as short as possible, and the rubber should be wired on. The pipes are led to a convenient place for the gas apparatus, which must not be exposed to quick changes of temperature. Hence the place must not be exposed to draughts, or to the radiation from the fire when the fire door is opened, otherwise almost anywhere around the boiler-room will do. It is convenient to have a table or box about four feet high on which to set the apparatus. A box on top of two barrels is often used.

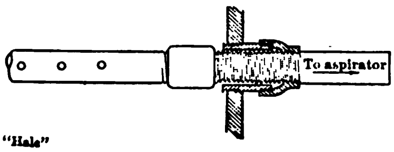

FIG. 290.

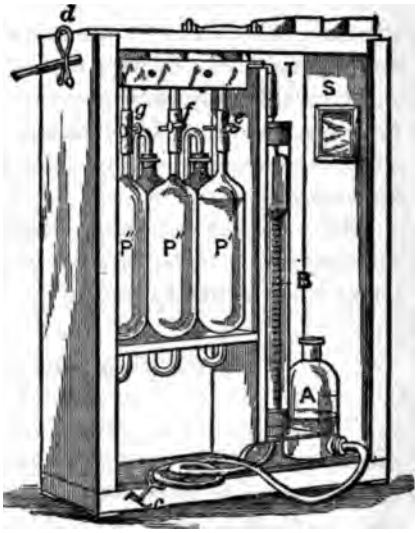

FIG. 291.—ORSAT'S GAS APPARATUS.

Apparatus.

The Orsat apparatus is generally considered the best (Fig. 291). This is bought from any dealer in chemical supplies. It is composed of a measuring burette *B* graduated to 100 cubic centimetres, of three or four pipettes *P* filled with reagents for absorbing the gases, and of a levelling bottle *A* filled with water for drawing the gases back and forth between the burette and pipette.

The points which I have found desirable are:

First.—Have rubber connections and pinchcocks at *g*, *f*, *e*, etc. Most of the apparatus sold have glass stopcocks, and although glass is slightly more accurate, and possibly better for laboratory use, it is far too fragile for the boiler-room.

Second.—Have a second connection either at *d* or just inside the case, which can be closed with a short piece of rubber tube and a pinchcock, as shown at *d*.

Third.—In my own practice I prefer to use an Orsat with four pipettes instead of three, two being for cuprous chloride. This is not usual or necessary, but I think it pays, for the reasons stated below.

Cost.—All the apparatus described in this paper, and reagents for a series of tests, can be bought for $30 or less. A second Orsat costs about $18 more.

Preparation of Reagents.

Caustic Potash.—Dissolve one part by weight of caustic potash made by the lime process in two to three parts of water. The caustic potash must have been made by the lime process, as that made by alcohol is apt to give rise to errors when analyzing the gases.

Caustic Soda.—If desired, soda may be used instead of potash. It is cheaper, but slower. Fill one pipette with the above solution.

Pyrogallol.—Take about 5 grams of pyrogallic acid (which is a snow-like powder) and wash it into the middle pipette with the solution of caustic potash above described. A 2-inch glass funnel filled even with the brim holds about the right quantity of the pyrogallic acid, in case scales are not at hand.

Cuprous Chloride.—Make up a stock bottle by taking 2 ounces of black copper oxide, 1 quart hydrochloric acid (commercial), and ½ pound copper wire, and put them in a bottle with an air-tight (rubber) stopper. Let stand until clear, which takes about ten days, when it becomes ready for use. The pipette for cuprous chloride is the one with copper wire in it.

Fill the pipette from the stock bottle and then add more acid to the stock bottle, and if it seems to be needed, more copper wire or copper oxide. In this way a constant supply may be kept on hand. The cuprous chloride is the only reagent which must be prepared previous to the test, as the others can be carried around in the solid form and made up in the boiler-room.

For more complete directions as to preparation of reagents, etc., see Gill on "Fuel and Gas Analysis" for engineers, published by John Wiley & Sons, or any good book on gas analyses. When prepared as directed, the caustic potash pipetteful may be used to absorb 4,000 cubic centimetres of carbonic dioxide, the pyrogallol to absorb 200 cubic centimetres of oxygen, and the cuprous chloride to absorb 80 cubic centimetres of carbonic oxide. When the solutions have been used to this extent they should be renewed. With a little experience the reagents can be prepared by measure with sufficient accuracy, so that it is not necessary to carry around weighing scales.

Collection of Samples of Gas.

The simplest method of collection is as follows:

Connect the lead pipe from the flue to *d* on the Orsat. If there is no second connection on the Orsat make one on the pipe by putting on a tee close to the Orsat. (Lead and glass tees can be bought of any chemical dealer, or the former made by any plumber.) Now open the second connection and lift *A* until the burette *B* is filled with water. Open the pipe to the flue, close the second connection, lower *A*, and gas will flow through *d* into the burette. This, however, may be mixed with air from the connecting pipes; throw it away by closing the pipes to the flue, opening the second connection, and raising *A*. Now draw further samples and repeat until the air has been exhausted from the connecting pipes, which can be determined by figuring their volume as compared with that of the burette *B*. This method of collecting a sample is, of course, very slow and laborious, if the pipes be at all large or long.

By using a small suction bag or suction pump the lead pipe can be freed from air, instead of by drawing and throwing away samples.

By using an aspirator the sample may be collected much more quickly. A water aspirator may be bought at any chemical apparatus store for a dollar or two. A steam aspirator may be made out of pipe fittings, from a 1-inch nipple 3 inches long, a 1-inch tee with ¼-inch outlet, a 1-inch by ¼-inch bushing, and a ¼-inch pipe with a thread cut 3 to 4 inches of its length. (See

Fig. 292.) It is essential that the steam from the aspirator be discharged into the open air and not through any pipe. Even three feet of discharge pipe may make enough back pressure so that it will not draw. By means of an aspirator the gas is kept flowing through the connecting pipe, and is drawn off at a tee into the Orsat as described above, except now that it is not necessary to throw away more than one burette full of gas, before a good sample is obtained in the Orsat.

Although by either of the means above described it is easy to obtain a correct sample, yet this sample only represents what was going on during the ten seconds or so occupied in drawing it. For some purposes, to be sure, we want to know the composition of the gases at any given instant, but more frequently we want to get the average for a definite time—say, half an hour or eight hours.

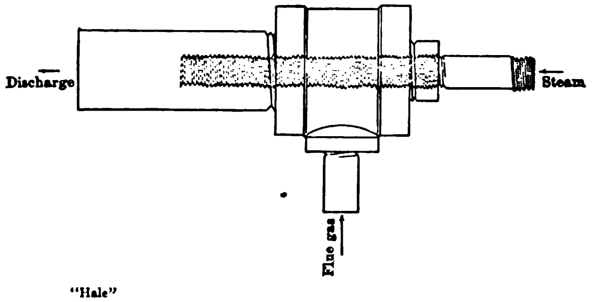

FIG. 292.

The composition of the gases fluctuates so quickly between the firings that it is necessary, if the gas be collected in samples whose time of drawing is short, to have fifteen to twenty samples in order to get a fair average, and even then the times of drawing may happen to come at some regular interval between the firings, in which case the result is much in error. The better way is to collect continuous average samples every half hour or hour; and although this method involves errors of its own, I have found it far more satisfactory than instantaneous samples.

Continuous samples are obtained in a collecting bottle as follows: (Fig. 293.) The aspirator keeps the gas continuously flowing through the pipe, as shown by the arrow. The bottle is first filled completely with water, even to the tee joint at *c*. This is easily done by placing the end of the rubber tube *bb* in a dipper of water and elevating it, first, of course, starting the siphon. After filling the bottle and pipe completely the water is allowed to flow out of *bb* drop by drop into a dish or pail. As each drop of water flows out at *bb* a drop of gas flows into the bottle at *a*. The flow of water is adjusted by a screw cock on the rubber pipe so as to get an average sample for thirty minutes, for an hour, five hours, or any time desired. The quart size is the most convenient for collecting bottles. Bottles with one outlet near the bottom are sometimes used, but I consider the use of a long and short tube passed through a rubber cork to be better. (See Fig. 293.)

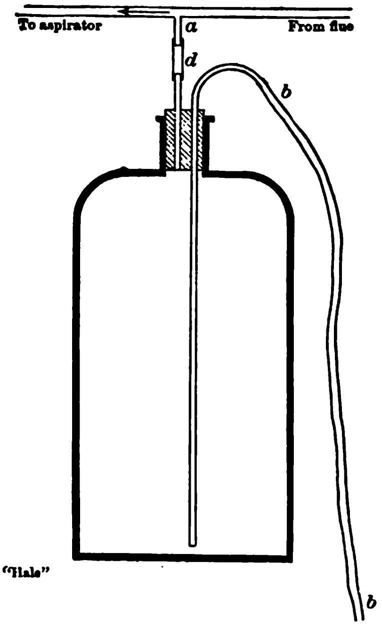

Fig. 293.

When the sample is collected the pinchcock is closed at *d*, the bottle is disconnected, connected to the Orsat, and a sample is drawn in for analysis as described above.

Figs. 294, 295, and 296 show the way in which the carbonic dioxide varies from time to time in tests on different coals, and indicate the need of using the method of continuous samples. Although by taking, say, twenty instantaneous samples at half-hour intervals we might get a fair average for the whole test, yet the method of continuous samples has another advantage—that it tells us at once during the first hour of the test whether the firing is what it should be, while we cannot be sure that the instantaneous samples represent anything except the exact instant when they are drawn until the test is partly completed.

Duration of Time in Collecting Samples.

If one man takes all the ordinary observations of the test he will not have much time for gas analysis. In such cases he will use the collecting bottles and take as many samples as he can. If possible, however, an assistant should be assigned to the gas analysis and given two Orsats and two collecting bottles. He should then have no difficulty in drawing and analyzing two samples per hour, each sample being drawn so as to be the average for a half-hour. With one Orsat he cannot count on much better than one sample per hour, unless unusually skilful. It is possible to carry on two, or even three, analyses at once in the Orsat, but this should not be attempted without considerable experience.

Fluid Used.

I have spoken of water as the fluid over which the gases are collected. On the whole, it is most convenient, but it absorbs carbonic dioxide and carbonic oxide, and it gives up oxygen, causing errors in the analyses.

If, however, some water is first saturated with gas, by letting flue gas bubble through for an hour or so either on the day before the tests or for the first hour of the test, and then the same water is used throughout for collecting half hourly or hourly samples, which are analyzed at once, the error of the average is negligible, entirely so in the carbonic oxide, and not over $\frac{2}{10}$ per cent. in the oxygen and carbonic dioxide. If the water is not saturated, or if the gases stand over it even two or three hours during and after collection, the error may be several per cent. Hence the sample should be analyzed as soon after collection as possible. If the intention is to keep the samples any length of time before analyzing they should be collected over mercury.

Brine does not absorb so much carbonic dioxide as the water, but the salt is apt to crystallize out and stop up the tubes. This

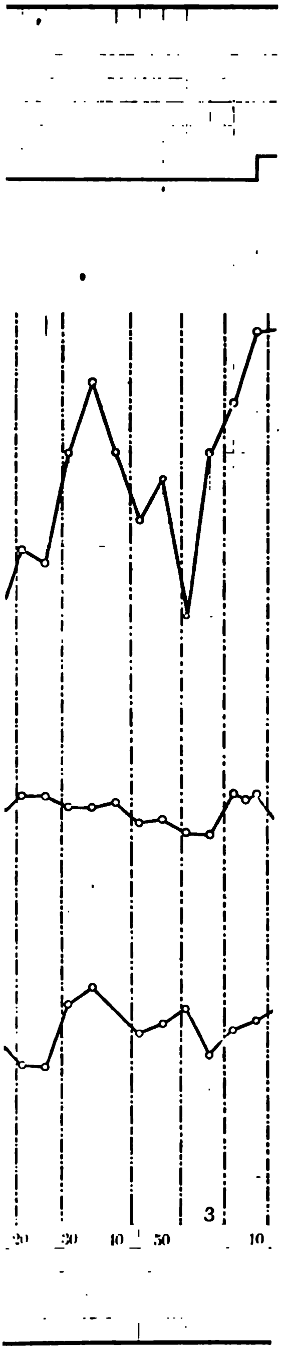

IRING.

yet the method of continuous samples has another advantage—that it tells us at once during the first hour of the test whether the firing is what it should be, while we cannot be sure that the instantaneous samples represent anything except the exact instant when they are drawn until the test is partly completed.

Duration of Time in Collecting Samples.

If one man takes all the ordinary observations of the test he will not have much time for gas analysis. In such cases he will use the collecting bottles and take as many samples as he can. If possible, however, an assistant should be assigned to the gas analysis and given two Orsats and two collecting bottles. He should then have no difficulty in drawing and analyzing two samples per hour, each sample being drawn so as to be the average for a half-hour. With one Orsat he cannot count on much better than one sample per hour, unless unusually skilful. It is possible to carry on two, or even three, analyses at once in the Orsat, but this should not be attempted without considerable experience.

Fluid Used.

I have spoken of water as the fluid over which the gases are collected. On the whole, it is most convenient, but it absorbs carbonic dioxide and carbonic oxide, and it gives up oxygen, causing errors in the analyses.

If, however, some water is first saturated with gas, by letting flue gas bubble through for an hour or so either on the day before the tests or for the first hour of the test, and then the same water is used throughout for collecting half hourly or hourly samples, which are analyzed at once, the error of the average is negligible, entirely so in the carbonic oxide, and not over $\frac{2}{10}$ per cent. in the oxygen and carbonic dioxide. If the water is not saturated, or if the gases stand over it even two or three hours during and after collection, the error may be several per cent. Hence the sample should be analyzed as soon after collection as possible. If the intention is to keep the samples any length of time before analyzing they should be collected over mercury.

Brine does not absorb so much carbonic dioxide as the water, but the salt is apt to crystallize out and stop up the tubes. This

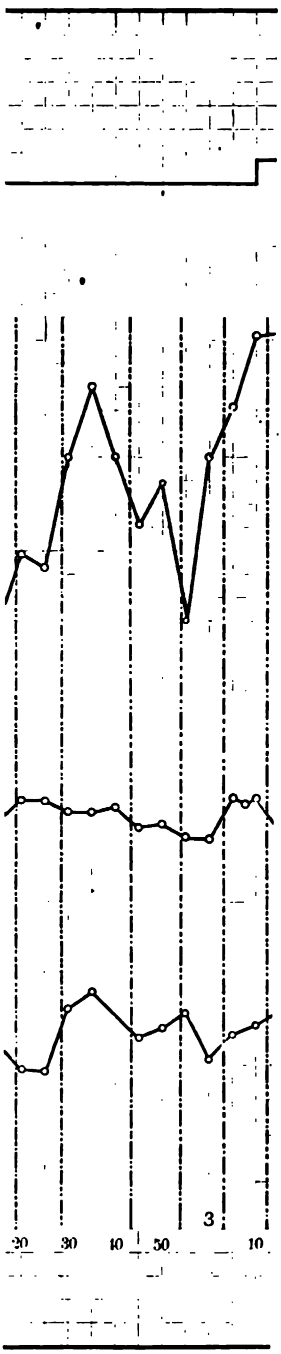

IRING.

gives trouble when the brine is running out of the collecting bottle drop by drop.

Glycerine is, I think, a little better than brine so far as absorption goes, but it is miserable stuff to handle, worse even than mercury.

Mercury is perfect so far as absorption goes, but it is costly, heavy, and hard to handle.

I have used all four fluids, and have settled on water as the best for ordinary work. For special purposes I might use mercury.

Water is used in the Orsat itself in any case.

Analysis.

Having collected the sample, 100 cubic centimetres or thereabouts are drawn into the Orsat and analyzed. (See Gill, " Gas and Fuel Analyses.") It is not necessary to have exactly 100 cubic centimetres, as it is easy to make the correction if we start with, say, 99.7 cubic centimetres or 100.1 cubic centimetres. It is essential to let the liquid stand one minute before reading in order that all the water may run down the sides of the burette, and it is also essential that the level in the burette and in the bottle *A* should be the same when reading. This is best accomplished by sighting over the water level in *A*. When reading, note that there are two bottom menisci in *B* caused by seeing it through two thicknesses of glass, and it depends on the lights which are most visible. It makes no difference which is used, so long as the same meniscus is read throughout each analysis, but it is not well to change the position of the lights during an analysis. Having taken the initial reading of 100 cubic centimetres or thereabouts, the gas is run into the caustic potash pipette and out again four times; allowed to stand for one minute in the burette, and then read. If desired, it is then run in and out of the same pipette four times more and a check reading taken, but this is not necessary on the caustic potash pipette, as four times is safe to absorb all the carbonic dioxide. The difference between this reading and the initial reading is the percentage of carbonic dioxide.

After getting the reading, run the gas in and out of the pyrogallol pipette eight times; let it stand one minute and read; repeat for a check reading. If any more gas is absorbed repeat until the readings check. The difference between this reading and the reading after absorption of carbonic dioxide gives the percentage of oxygen. There is no particular virtue in the eight times. Sometimes five or six times will take all the oxygen out; sometimes it takes a great many more, according to the amount of oxygen, temperature, etc. If using two Orsats, the gas may be run into a pipette and allowed to stand and absorb while manipulating the other Orsat. The gas will, however, absorb quickest if made to run back and forth between pipette and burette.

After absorbing all the oxygen in the pyrogallol pipette, the gas is run into the cuprous chloride pipette to absorb the carbonic oxide. Here the absorption is even slower than with the oxygen.

The solution of cuprous chloride has only a weak attraction for the carbonic oxide, and sometimes a solution of cuprous chloride which has absorbed considerable carbonic oxide will give up a little of it to a gas which contains only a little carbonic oxide.

It is for this reason that I prefer to use two cuprous chloride pipettes. The gas is first run several times into a pipette of cuprous chloride which may or may not have been used before. Then the gas is run into the second pipette, containing a practically fresh solution of cuprous chloride, which takes out the last traces of carbonic oxide. (See Hempel or any book on gas analysis.)

The following is a convenient form for record. The words in parentheses are frequently omitted in the note-book.

(COLLECTING) BOTTLE *A*.

Start (at) 9.03 A.M. Stop 9.30 A.M.

(Sample taken into) Orsat III. at 9.38 A.M.

	Gross 99.8 (c.c.).		
(Reading after absorption of) CO_2	13.2		
(check)	13.2	per cent. CO_2	13
(Reading after absorption of) O_2	18.3		
(check)	18.5		
(check)	18.5	per cent. O_2	5.3
(Reading after absorption of) CO	18.8		
(check)	18.9		
(check)	19.0		
(check)	19.0	per cent. CO	.5

Finished at 10.13 A.M.

Some Precautions Necessary.

Keep copper wire in the cuprous chloride pipette and cuprous chloride stock bottle.

Keep the rubber bags on the rear stoppers of the pyrogallol and cuprous chloride pipettes. If air gets at the solutions it spoils them.

Wire on the corks on the collecting bottles, but not so tightly as to force the rubber away from the glass in any place.

When manipulating do not let any of the chemicals get into the burette. It does no harm, however, if a little water gets into the pipettes If any cuprous chloride gets into the burette, do not bother, but if any pyrogallol or caustic potash gets into the burette the water in *A* and in the burette must be changed before drawing in another sample.

Make sure every now and then that the aspirator continues to draw. With a smoky coal it is well to filter the gas. In my practice I usually wash the gas, using a collecting bottle (Fig. 263) filled about an inch deep with water. The long tube is connected to the pipe from the flue as close to the flue as is convenient. The short pipe is connected to the pipe leading to the aspirator. The gas then bubbles up through the water and is washed clean. With some coals this is absolutely essential, as otherwise the lead pipe will clog up inside of an hour.

Do not use too much steam pressure in the aspirator. Use enough to get a good suction and no more.

Keep a record of how much carbonic oxide and oxygen have been absorbed, and refill the pipettes when necessary.

Keep a thermometer on the table, and note if any change of temperature occurs. Two degrees Fahr. change makes $\frac{3}{10}$ per cent. error. The water jacket on the burette largely protects against these errors. Keep this water jacket full of water.

Remember to absorb the gases in the right order, viz.: caustic potash pipette for carbonic dioxide, pyrogallol pipette for oxygen, cuprous chloride pipette for carbonic oxide. The pyrogallol absorbs carbonic dioxide as well as oxygen, and the cuprous chloride absorbs oxygen as well as carbonic oxide, so that the results are erroneous if the correct order is not followed.

Look out for leaks at joints, and pinholes in the rubber connections.

Other Components of the Gas.

These are sulphur dioxide, nitrogen, argol, oxides of nitrogen, cyanides, hydrogen, and hydrocarbons. (For the presence of nitrogen-oxygen compounds see *Engineering News*, February 18, 1897.) Cyanides occur in blast furnace gases, hence they may occur in flue gases. Hydrogen and hydrocarbons, we know, occur. The sulphur dioxide is absorbed by caustic potash, and is generally counted as carbonic dioxide.

No volumetric analysis will give us any useful information about the other gases. The limit of accuracy of volumetric analyses is about $\frac{1}{10}$ per cent., and $\frac{1}{10}$ per cent. of some of the heavier hydrocarbons would involve a loss of 10 per cent. of the heating powers of the coal. Since we can generally account for all the heat in the coal to within 10 per cent. without considering these hydrocarbons, it is evident that volumetric analyses for the hydrocarbons would be a waste of time. Gravimetric analyses, such as those made by Scheurer-Kestner, would give the figures, but such gravimetric analyses should be undertaken only by a chemist.

The usual way is to enter the balance of the gas after taking out the carbonic dioxide, oxygen and carbonic oxide as nitrogen.

Illustrations.

I give herewith three tests illustrative of the value of gas analysis, two made by Mr. Barrus on an Almy boiler (Fig. 297) and one by myself on a horizontal tubular boiler with Hawley furnace. I analyzed the gases for Mr. Barrus in his tests; Mr. G. S. Curtis, junior member of the Society, analyzed the gases for me in my own test.

Table I. (Dimensions.) Is given for the sake of reference.

Table II. Has the ordinary results of boiler tests, taken directly from the reports.

Table III. Has the various data based on the flue gas analysis, etc. The calculations are as follows for the items that are not obvious:

* Pounds dry gas per pound carbon = per cent. of each gas

---

* For example, in Test 1, Table III. (p. 922):

$$\begin{array}{rlr} 11.9 & \%\ CO_2 \times 44 = & 523.6 \\ 6.2 & \%\ O_2 \times 32 = & 198.4 \\ 3.1 & \%\ CO \times 28 = & 86.8 \\ 78.8 & \%\ N_2 \times 28 = & 2,206.4 \\ \hline & & 3,015.2 \end{array}$$

$\%\ CO_2 + \%\ CO = 15$

$15 \times 12 = 180$

$3,015.2 \div 180 =$ pounds dry gas per pound carbon $= 16.7$.

by molecular weight ÷ per cent. of carbon containing gases by atomic weight of carbon.

Pounds dry gas per pound combustible = pounds gas per pound carbon by per cent. carbon in combustible.

Pounds dry gas per pound, coal as fired = pounds gas per pound combustible by per cent combustible in coal.

FIG. 297.—ALMY WATER TUBE BOILER, CLASS D.

H_2O from H in fuel = H in coal (or combustible) by 9.

Pounds air per pound combustible is of course one pound less than the gas per pound combustible. Air per pound coal is only approximately one pound less than gas per pound of coal.

Specific Heat. The specific heat of the dry flue gas, works out at ordinary temperatures and compositions very close to .24. The specific heat of the gas including H_2O, works out very close to

.246 without considering the moisture in the air. The latter will bring the specific heat up a little, so that when calculating as dry gas I use .24 and as moist gas .25. These figures are accurate enough for any ordinary work, and the exact computation of the specific heat is laborious and uncertain.

The consideration of the H_2O in the air is a refinement I do not go into, since it involves the loss of only a small amount of sensible heat, hardly more than our uncertainty as to the true specific heat of the gases.

Heat Balance Computation. (When based on combustible, then for coal read combustible.)

To give percentages multiply by 100.

Useful heat in steam

$$= \frac{\text{evaporation from and at 212 degrees per pound of coal by 966}}{\text{B. T. U. per pound of coal.}}$$

Sensible heat in waste gas above outside temperature = pounds gas per pound coal by specific heat by (flue temperature – less external temperature) ÷ B. T. U. per pound coal.

Latent heat in H_2O

$$= \frac{\text{pounds } H_2O \text{ per pound coal from H and } H_2O \text{ in fuel by 966}}{\text{B. T. U. per pound of coal.}}$$

Incomplete combustion $= \dfrac{\text{per cent. CO}}{\text{per cent. (CO + CO}_2\text{)}}$ by per cent. carbon in coal by 10,048 ÷ B. T. U. per pound coal.

$$\text{Radiation} = \frac{\text{B. T. U. of radiation per hour}}{\text{pounds coal per hour by B. T. U. per pound coal}}$$

combustible in ashpit (coke)

$$= \frac{\text{per cent. combustible in ashpit to total coal by 14,500}}{\text{B. T. U. per pound coal.}}$$

Balance to make 100 per cent.

Smoke, hydrocarbons, and error.

It is not essential to have an analysis of the coal in order to make use of the gas analyses. Knowing the class of coal, as anthracite, semi-bituminous, bituminous, etc., the per cent. of carbon in the *combustible* may be taken from the text books with an error of not over 3 per cent. of itself. This will give the pounds gas per pound combustible with a similar accuracy —*i.e.*, 3 per cent. of itself—making the loss by sensible heat in the flue gases accurate to within 1 per cent. of the heat in the coal.

Similarly, the per cent. of hydrogen may be taken for any class of coal from the text books, and the error in determining the loss will not be over ½ per cent. of the heat in the coal.

Of course, however, the better way is to have the coal analyzed by a chemist, as the analysis not only makes the heat balance more accurate, but gives a determination of the total calorific power of the coal.

Remarks on the Tests.

These tests are not to be taken in any way as showing the comparative efficiency of the boilers.

Although the Almy boiler is unlike any of the smoke-tube boilers, yet its furnace is practically the same as that of an upright tubular with water leg.

Both furnaces are surrounded by water walls, have the water top some 3 feet or so from the fire and have practically no provision for air admission above the fire, except for the fire doors. In both cases the gases pass vertically upward. The results show that with this type of furnace there is danger of considerable loss from incomplete combustion to carbonic oxide whenever the fires are over 4 inches thick. I have made some ten or a dozen tests on the vertical tubular boiler with water leg, and although they are not available for publication, I may say that I have only once failed to find carbonic oxide, and that thick fires have always made the carbonic oxide unduly large.

The results also show, since the percentage unaccounted for in the heat balance includes all loss by incomplete combustion to hydrocarbon, that a large loss by incomplete combustion to carbonic oxide does not necessarily involve a large loss by incomplete combustion to hydrocarbon. I hope that some of our Western members can give us information as to whether the reverse is true. My researches so far indicate that these two forms of incomplete combustion are almost entirely independent.

Remarks on Methods of Presentation of Heat Balance.

Though I agree with those members of the Society who believe that the evaporation per pound combustible best represents the performance of the boiler if only one term is used, rather than the evaporation per pound of coal, wet or dry, or percentage of efficiency, yet the heat balance is best based on the pound of coal. The reason is that the pound of combustible on which the evaporation is based includes a small percentage of earthy matter which is not included in the "pound of combustible" on which the calorific power of the fuel is based, this percentage being the amount of earthy matter that disappears up the chimney. The amount is computed by taking the difference between the percentage of earthy matter shown by the analysis of the coal and the percentage that the earthy matter in the refuse bears to the total coal. This difference generally runs about 1 per cent. in tests in which I have had the refuse analyzed, but Mr. Witham and Prof. Goss have found higher results. Of course if the determination of the amount of earthy matter in the small sample of coal indicates that the error in sampling is greater than the loss of earthy matter up the chimney, then the combustible must be used as the basis for the heat balance.

The percentages in the heat balance are the same whether it is based on the theoretical dry coal or on the coal actually fired. I see no object in basing the heat balance on anything except what is actually fed to the furnace, except as stated above.

The Useful Heat in Steam.

The *useful* heat, of course, does not include the heat of evaporation of the moisture in the coal. Hence if the stated "pounds of evaporation per pound of fuel" should include the evaporation of the moisture in fuel, as I believe is the case in some reports, a correction should be made.

Loss by Sensible Heat.

This is based on the temperature of the external air. If it were based on the temperature of the boiler-room then we should have to divide the radiation into two parts: 1st, actual loss by radiation; 2d, radiation utilized by heating the external air to boiler-room temperature.

I have spoken above of my reasons for adopting .24 for the specific heat of dry flue gas and .25 as the specific heat of the actual gas, including the H_2O. Although this is not strictly accurate, the error is far less than the errors in determining either the quantity or temperature of the gas.

Loss by Latent Heat of H_2O *in Gases, Heat of Combustion of Carbonic Oxide, and Loss by Combustible in Ashpit.*

These need no explanation.

Radiation.

The radiation must generally be included in the unaccounted for. In the Almy tests, however, it was determined by closing all draughts after drawing the fires, and noting the fall in pressure in a given time. There being very little brickwork about the boiler, the loss of heat could then be determined from the weight of water and iron in the boiler and the fall of temperature.

In other tests on similar boilers (unfortunately not available for publication) the same method has been used and its results checked by comparing it with the results of tests on loss of heat through pipe coverings similar to the boiler covering. The results generally agreed to within 20 per cent. or 30 per cent. of themselves, the larger being the loss as computed from the fall of pressure. The reason for this is probably that the draughts cannot be completely stopped, so that some air is heated inside the boiler and passes up the chimney. Even 20 per cent. is less than ½ per cent. of the total heat in most tests that I have made on this class of boiler.

Unaccounted For.

This includes loss by smoke, by hydrocarbons and other gases not analyzed for, and error. There are some sources of error that may be spoken of as not accidental: *First*, the measured temperature of the flue gases is probably less than the true temperature, since the walls of the flue are colder than the flue gases and the thermometer radiates some heat to them. That this is the case may be shown by a simple experiment. Take a thermometer, hold it in the air for a few minutes, and note its reading. Then put a piece of ice near it and also under it, so that even if the ice cools the air the current of air that flows over the thermometer is not cooled. The thermometer will, however, show a lower reading than before. The difference of temperature between the ice and the air of the room is probably not as great as between the walls of the flue and the flue gases.

A second source of error is that the gas analyses are always a time average; that is, we average the readings each half hour or each hour, or as often as we collect samples. Let us suppose that the percentage of carbonic oxide is 12 per cent. for half an hour and 8 per cent. the next half hour; then the time average is 10 per cent. But if there were two tons of gas the first half hour, and only one ton the second, then the true average is not 10 per cent. but $\frac{12 + 12 + 8}{3} = 10\frac{2}{3}$ per cent.

An experiment, the results of which are given graphically in Fig. 296, shows that the highest per cent. of carbonic dioxide comes when the actual amount of air as shown by an anemometer is least, so that the time average of the carbonic dioxide is slightly higher than the truth, but probably not over ½ per cent. For the same reason the time average percentage of carbonic oxide is very likely a little higher than the true average, which would tend to make the errors balance. In any case, it does not appear that the errors of this nature are over 1 per cent. or 2 per cent. of the heat in the coal. The other errors are chiefly of an accidental nature, so that though single boiler tests may vary, yet if we have enough tests to free the average from accidental variations, then the percentage unaccounted for should give an idea of the loss by smoke and hydrocarbons.

Summary.

Gas analysis can be carried on as a part of boiler testing. It will account for all but a few per cent. of the heat. It will furnish an explanation of uneconomical performances. It will furnish a check on markedly erroneous performances (as, for instance, if the evaporation be reported as very high, the gas analysis will show whether this was due to making the chimney and other losses small, or to an error), and, finally, since the gas analysis shows the owner of the boiler *where* his losses are, the gas analysis is a more important part of the boiler test than the analyses of the coal or the determination of its calorific power, which only shows how much his losses are.

Appendix I.

I have put in Figs. 294, 295, and 296 to illustrate certain points as they come up, but also because they disagree with a frequently stated theory. These figures give the temperature of the gases as measured just above the fire by a LeChatelier pyrometer.

The theory that I refer to is that putting on fresh coal cools the gases, and in contrast to this theory the facts show that putting on fresh coal has no cooling effect on the gases, but that within a few seconds or a minute after firing, the temperature of the gases is markedly increased.

It is true, of course, that the radiant heat from the fire may be checked by adding fresh coal, and I present these curves more as being added facts than as exponents of a new theory.

Appendix II.—Illustrative Tests.

TABLE I.

TESTS 1 AND 2.

Almy Boiler. (*See cut, Fig.* 297.)

Heating surface, square feet	474
Grate surface, " "	11.38
Grate openings, inches	½
Grate bars, inches	9/16
Draught opening among tubes, square feet	4.6
Stack diameter, inches	19
Height above grates, feet	35½

TEST 3.

Boiler dimensions.

Type, horizontal return tubular and Hawley furnace.

Number in battery, 2; number tested	1
Diameter, inches	60
Length of tubes, feet	16
Diameter of tubes (external), inches	3
Number of tubes	91
Water-heating surface, square feet	1,208
Hawley Furnace.	
Upper grate tubes	21
Diameter (internal), inches	2
" (external), inches	2⅜
Heating surface, square feet	52
Grate surface, upper (5 x 4), square feet	20
" " lower (5 x 4½), square feet	22½
Total	42½
Total heating surface, square feet	1,260

Note.—The flue is a brick one, built back over the boilers, thus giving a slight amount of superheating surface. The effect of this is, in my opinion, so slight that it may be safely neglected.

The heating surface includes about 30 square feet of the shell over the furnace which received some heat by radiation. It does not include the superheating surface gained by leading the flue back over the boilers.

TABLE II.

Tests 1 and 2.

Almy Water-tube Boiler.

Kind of Coal—Georges' Creek Cumberland.

Per cent. of moisture in coal............	1.3	2.4
Conditions...............................	Preliminary Test.	Normal.
Date of Tests............................	October 30, 1896.	October 31, 1896.
Total Quantities.		
Duration, hours..........................	11.01	9.15
Weight of dry coal consumed, pounds...	2,195.	1,274
Weight of ashes and clinkers, pounds ...	186.	110
Per cent. of ashes and clinkers, per cent..	8.5	8.6
Weight of water evaporated.	15,219	11,832
Hourly Quantities.		
Coal consumed per hour, pounds........	199.5	139.2
Coal consumed per hour, per square foot of grate, pounds..........	17.53	12.2
Water evaporated per hour, pounds.....	1,382.1	1,288.5
Equivalent evaporation per hour, feed 100 degrees, pressure 70 pounds.........	1,456.7 lbs.	1,300.4 lbs.
Horse-power developed on basis of 30 pounds horse-power................	48.56	43.3
Equivalent evaporation per square foot of heating surface per hour...	3.07	2.74 lbs.
Averages of Observations.		
Average boiler pressure, pounds.........	149.1	147.1
Average temperature of feed water, degrees..............	55.2	56.7
Average temperature of flue gases, degrees............................	534	513
Average draught suction, inches.........	.15	.12
Per cent. of moisture in steam...........	.3	.35
Weather and outside temperature.......	Clear—Warm.	Clear—Warm.
RESULTS.		
Water evaporated per pound of coal, pounds.	6.933	8.895
Equivalent evaporation per pound of coal from and at 212 degrees, pounds.....	8.389	10.736
Equivalent evaporation per pound of combustible from and at 212 degrees, pounds..............................	9.168	11.746
External air temperature...............	66	70
Boiler-room temperature................	78	80
Thickness of fires......................	6 in. to 8 in.	3 in. to 4 in.
Interval between firings.................		7 min. to 10 min.
Rate of combustion reduced to a standard draught of .4 inches— = actual rate × $\sqrt{\frac{.4}{\text{actual draught}}}$..........	28.7	22.3

TABLE II.

TEST 8.

Horizontal Return Tubular Boiler and Hawley Furnace.

Date		January 30, 1897.
Duration, actual	hours.	10 hrs. 40 min.
" equivalent	hours.	9 " 30 "
***Coal**—Pocahontas.*		
Total weight, including .4 of wood	pounds.	4,071
Moisture	per cent.	4.17
Dry coal	pounds.	3,901
Refuse	"	254
"	per cent.	6.5
Combustible	pounds.	3,647
Dry coal per hour	"	411
Mean thickness of fire above dead plate, (upper grate)	inches.	12
" " " " " " (lower grate)	"	3¼
Fireman—M. Fagan.		
Number of firings (9 A.M. to 5.30 P.M.)		52
Mean intervals between firings	minutes.	10
Pressures.		
Gauge	pounds.	108
Draught (average)	inches.	.39
Temperatures.		
External air	degrees Fahr.	24
Boiler room	"	68
Escaping gases	"	491
Feed water	"	39
Quality of steam (1 = dry steam)		.99
Water fed to boiler and apparently evaporated	pounds.	36,610
Dry steam	"	36,254
" " from and at 212 degrees Fahr	"	44,875
" " " " " " " " per hour	"	4,671
Evaporation.		
Per pound coal as weighed, actual conditions	"	8.9
" " " from and at 212 degrees Fahr	"	10.9
" " dry coal from and at 212 degrees Fahr	"	11.38
" " combustible from and at 212 degrees Fahr	"	12.17
Rates of Combustion.		
Per square foot of upper grate per hour		20
" " " " total " " "		9
" " " " upper " " " reduced to .4-inch draught $\left(\text{actual rate} + \sqrt{\frac{.4}{\text{draught}}}\right)$		20.2
Rate of Evaporation.		
From and at 212 degrees Fahr. per square foot of heating surface per hour.		8.7
Ditto, based on boiler surface only		3.9

TABLE III.

TESTS 1 AND 2.

Almy Water Tube.

Flue Gas.	Per cent. by volume. October 30.	 October 31.
CO_2	11.9	13.1
CO	6.2	0.9
O_2	3.1	4.8
N_2 (by difference)	78.8	81.1

Combustible Analysis.

C	87.0
H	4.7
N (assumed)	2.4
S (assumed)	.8
O (difference)	5.1
	100.0

B. T. U. per pound combustible :

$$\frac{14{,}650\ C + 62{,}200\left(H - \frac{0}{8}\right) + 4{,}000\ S}{100} = 15{,}303.$$

Coal Analysis as Fired.

Moisture	1.3	2.4
Earthy matter	5.1	5.1
Combustible	93.6	92.5
	100.0	100.0
B. T. U. per pound of coal as fired	14,326	14,158
Refuse	not analyzed.	
Combustible in refuse—p. c. of total coal		
Earthy matter in chimney		
Pounds dry gas per pound carbon	16.7	17.95
Pounds dry gas per pound combustible	14.59	15.62
H_2O in gas from H in coal	.40	.40
" " " " H_2O " "	.01	.02
Total gas per pound combustible	15.00	16.04
Air per pound combustible	14.00	15.04
	p. c.	p. c.
Dr. Heat balance based on combustible	100.00	100.00
Cr. Steam	57.9	74.1
Sensible heat in waste gases above temperature of external air	11.4	11.8
Latent heat of H_2O in gases	2.6	2.6
Incomplete combustion to CO	19.6	3.7
Radiation	1.7	2.4
Carbon and hydrocarbons in smoke, unaccounted for and error	6.8	5.4

TABLE III.

TESTS 1 AND 2 (*Concluded*).

Almy Water-tube Boiler.

Dr.	Heat balance based on coal	100.00	100.00
Cr.	Steam	55.8	71.5
	Sensible heat in gases	11.4	11.8
	Latent heat of H_2O in gases	2.6	2.6
	Incomplete combustion to CO	19.6	3.7
	Radiation	1.6	2.3
	Combustible in ashpit (estimate)	4.	4.
	Carbon and hydrocarbons in smoke, unaccounted for and error	5.0	4.1

TEST 3.

Horizontal Return Tubular Boiler and Hawley Furnace.

Analyses Flue Gases.

	Per cent. by Volume.
CO_2	10.6
O_2	10
CO	0
N_2 (by difference)	79.4
	100

Coal as Weighed.

	Per cent. by Weight.
C	81.38
H	4.47
N	1.23
O (by difference)	2.56
S (volatile)	.59
Earthy matter	5.60
Moisture	4.17
	100

B. T. U. per pound of coal $\left.\right\}$ $146.5\,C + 622\left(H - \frac{O}{8}\right) + 40\,S$ 14,526

B. T. U. per pound combustible 16,100

Waste Gases.

Dry gas per pound carbon burned, pounds		23.66
H_2O from hydrogen in coal, pounds	.49	
" " moisture " " "	.03	
" " " added before firing (estimated), pounds	.05	
Total gas per pound of carbon	.57	24.23
Gas per pound of coal as fired		19.72

Specific heat taken as .246.

TABLE III.

Test 3 (*Concluded*).

Horizontal Return Tubular Boiler and Hawley Furnace.

Heat Balance Based on Coal.

	Per cent.	Per cent.
Dr. Heat in coal fed to furnace		100.00
Cr. Useful heat in steam	72.8	
Latent heat in H_2O in gases of combustion	3.1	
Sensible heat in gases of combustion above temperature of external air	15.6	
Incomplete combustion to CO	0	
Balance made up of combustible in ashpit (estimated 2¼ per cent.), radiation (estimated 4 per cent.), and other minor losses	9	
	100.0	100.00

Heat Balance on Combustible.

	Per cent.	Per cent.
Dr. Heat in combustible		100.00
Cr. Useful heat	72.9	
Latent heat in H_2O in gases of combustion	3.1	
Sensible heat in H_2O in gases of combustion above temperature of outside air	15.6	
Incomplete combustion to CO	0	
Balance made up of radiation (estimated 4 per cent.), error due to counting as combustible earthy matter up the chimney; other errors and hydrocarbons in gases	8.4	
	100.0	100.00

DISCUSSION.

Prof. J. H. Kinealy.—I find Mr. Hale's paper of great interest, and I think it will be of value to those engineers who have not heretofore given much attention to the analysis of furnace gases.

I would like to know what Mr. Hale means by "rubber pipe." If he means soft rubber tubing, such as is ordinarily used by chemists, he ought to tell us what gases will be affected by the tubing and how they will be affected.

Caustic potash is usually sold as potassium oxide, and there are about five grades or qualities, as follows:

		List Price per pound.
1.	Potassium oxide, com. (crude potash)	$0.15
2.	" " fused, white, in sticks	.65
3.	" " chem. pure, by alcohol	1.50
4.	" " " " by baryta	3.50
5.	" " pure, with lime (potassa lime)	2.00

The grade to use is No. 2, the ordinary, white, caustic potash.

I think most engineers will find it more convenient to use red phosphorus for the determination of the oxygen than the pyrogallol. It can be prepared and put in the pipette in the laboratory, and as long as any of the phosphorus remains in the pipette it is ready for use. If the Orsat-Muencke apparatus is used—and I agree with Mr. Hale that it is probably the best for engineers—the oxygen pipette must be reversed, so that the gases pass into the bulb with large mouth, if phosphorus is used. The phosphorus, when bought, will be in short pieces or sticks about one-half an inch in diameter. These must be melted and cast into sticks about one-eighth of an inch in diameter and three inches long. These sticks are then put in the large-mouthed bulb of the oxygen pipette, and when the pipette is connected to the apparatus it is ready for use. Water, of course, is used as the displacing fluid. I had a lot of trouble with the pyrogallol, and do not like it. It is some trouble to prepare the phosphorus sticks, as phosphorus must always be handled *under* water; and care must be taken not to get any of it in any cuts on the hand, as it may make a bad sore.

I do not calculate the weight of air admitted to the furnace per pound of carbon, or combustible, as Mr. Hale does, because I consider his method clumsy. Neglecting the moisture in the gases and the unburned hydrocarbons, the weight of air admitted to the furnace per pound of carbon burned is

$$(1) \quad . \; . \; . \; . \; . \quad W = \frac{1.20\,(200 - y)}{x + y}.$$

x is the per cent., by volume, of the CO_2 in the gases;

y is the per cent., by volume, of the CO in the gases.

The deduction of this formula is briefly as follows:

By the laws of chemical combinations it may be shown that if a pound of carbon is burned to CO and CO^2, so that the weight of carbon in the CO_2 is d, and that in the CO is $1 - d$, and these gases CO and CO_2 are mixed with other gases, the relation between the carbon in the CO_2, the carbon in the CO, the per cent., by volume, of the CO_2 in the mixture of gases, and the per cent., by volume, of the CO, is given by the formula

$$(2) \quad . \; . \; . \; . \; . \; . \; . \quad \frac{d}{1 - d} = \frac{x}{y}.$$

From this is obtained

(3) . . . . $d = \frac{x}{x + y}$.

It can also be shown that

(4) . . . . $d = \frac{0.369Ax}{1100}$,

where A is the volume of the mixture of gases at 32 degrees Fahr.

From these equations we get

(5) . . . . . . $A = \frac{1100}{0.369\,(x + y)}$.

When coal is burned in a furnace, the volume of the resulting gases depends upon the completeness of the combustion and the composition of the coal.

When CO_2 is formed, the volume of the CO_2, measured at 32 degrees Fahr., is exactly equal to the volume of the O used; when CO is formed, the volume of the CO is *twice* the volume of the O used; when hydrogen is burned, the volume of the gas formed, HO, is *twice* the volume of the O used; and when sulphur is burned the volume of the resulting gas is equal to the volume of the O used.

Hence, the volume of the gases, measured at 32 degrees Fahr., in a furnace is equal to the volume of air admitted, plus one-half the volume of the CO, plus the volume of the moisture from the coal, plus one-half the volume of the moisture from the hydrogen in the coal, plus the volume of the unburned hydrocarbons. Neglect the moisture and the unburned hydrocarbons, and call V the volume of the air admitted per pound of carbon burned, and we get

(6) . . . . $A = V + \frac{Ay}{200}$.

From this we have

(7) . . . . $V = \frac{A\,(200 - y)}{200}$.

Put in (7) the value of A as given by (5), and we get that the volume of air admitted, per pound of carbon burned, is

(8) . . . . . . $V = \frac{1100(200 - y)}{0.369\,(x + y)}$.

Since one cubic foot of air at 32 degrees Fahr. weighs 0.0807 pounds, the weight of air admitted per pound of carbon is

$$(9) \quad . \; . \; . \; . \quad W = 0.0807\,V = \frac{1.20\,(200 - y)}{x + y}.$$

This formula is very handy to use *in* the boiler room when a test is being made to determine whether or not there is a sufficient supply of air being admitted to the furnace at all times.

I have not attempted to make a heat balance as described by Mr. Hale.

I think the term, "Latent heat in H_2O," on page 914, should be "Heat of gasification of H_2O," and that the factor 966 should be replaced by a factor whose value is about 1100. This, however, would make a very small change in the total heat.

I think the great value of gas analysis lies in the fact that it enables us to adjust the air supply properly. The few analyses which I have made have convinced me that in the ordinary furnace under the ordinary return tubular boiler, there is considerable loss due to incomplete combustion of the carbon, especially when using a bituminous coal of low grade but rich in volatile matter. Whether or not there are any unburned hydrocarbons, I do not know, but I think there must be, as there is often so large an amount of CO. When the fire is thick or dirty there is almost always a deficiency of oxygen and an excess of CO immediately after firing.

I have often gotten as high as 10 per cent. CO and little or no free oxygen.

When there are any unburned hydrocarbons, or a large amount of CO in the gases, there is no way to check the analyses; but when there are no unburned hydrocarbons and a small per cent., probably less than 2 or 3, of CO, the sum of the per cent. of CO_2, one-half the per cent. of CO, and the per cent. of free oxygen should be about constant. This sum should *never be equal to* 21 *except when burning pure carbon.*

Prof. R. C. Carpenter.—Mr. Hale's paper in relation to "Flue Gas Analyses" is of considerable importance, and in general my experience is quite similar to his. I note that Mr. Hale shows in the examples submitted a considerable amount of CO in some instances. We have made many attempts to find this gas in connection with a flue gas analysis, and have never been able to find it present except so far as a mere trace or an exceedingly minute quantity is concerned. I consulted Professor Dennis of the Department of Chemistry, who has charge of that work in Cornell University, and who has made a specialty of the methods of flue gas analysis while taking a graduate course in Germany. He assures me that, under the conditions which ordinarily exist in reference to the operation of a boiler, it is nearly if not quite impossible for CO to exist, and that it cannot exist in the presence of free oxygen unless it be drawn from the boiler at a very high temperature. I hope that Professor Dennis will also discuss this question before the Society.

The method of drawing the sample of flue gas from the base of the chimney is not to be commended, since a great deal of air is likely to be drawn into the flue gases by filtration through the brickwork, and I prefer now to draw all samples directly from the combustion chamber, and before any opportunity for any mixture with air has taken place. I found a few weeks ago that, in taking two samples of flue gas, the one from the back part of the boiler, the other from the flue, the difference in the amount of CO_2 was very considerable, being over 12 per cent. in one case and only about 7 per cent. in the other, which illustrates the point referred to.

The method of drawing the sample which, in my opinion, gives the best results consists in the employment of two cans, each of which is about eight inches in diameter and thirty inches in height. These cans are connected together by rubber tubing, and also arranged so that either may be connected to the flue. By setting the can which is full of water on a bench about three feet from the floor and connecting this to the flue, and setting the empty can on the floor, the water will flow from the full can into the empty one, and the flue gas may be drawn into the upper can. By regulating the time of flow of the water between these cans, a sample can be collected which will represent the average for some considerable time. By using the same water over and over again, it soon becomes saturated and will absorb no additional CO_2 or other ingredients of the flue gases.

Although the Orsat apparatus is portable, we have found considerable difficulty in so carrying it from place to place as to prevent breakage, the special point of weakness being the glass connections (which Mr. Hale has omitted) between the pipettes and the measuring burette, and also the connection of the double absorption pipette by the U-shaped tube at the bottom. The general form of this pipette is shown in the accompanying sketch (Fig. 298). To lessen the risks of breaks with this class of apparatus, we have designed a form of pipette which is much stronger, and which is used in exactly the same manner as Fig. 298, and is shown in Fig. 299. There is another objection to the Orsat apparatus, which is due to the fact that liquid reagents only can be used, and that the special kind of liquid reagents, which are

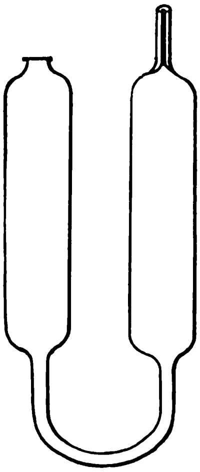

FORM OF PIPETTE ORSAT APPARATUS

FIG. 298.

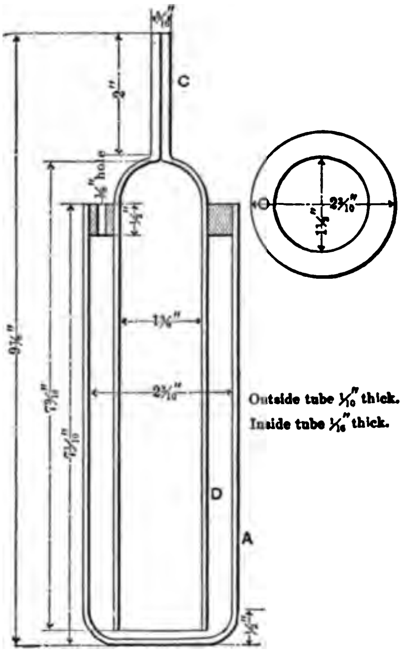

FIG. 299.

ordinarily used and which are described by Mr. Hale, do not in all cases take out all the oxygen—at least they are very slow to act. Stick phosphorus is very much quicker and better. As an illustration, the examples given by Mr. Hale show that on October 30th the sum of CO_2, CO, and O is 21.2, and October 31st is 18.8 per cent. As these compounds generally replace the oxygen from the atmosphere, it is difficult to explain this descrepancy, except by leakage in the first case and by lack of absorption power in the second case. We have found it very difficult with the "pyro" solution to absorb all the oxygen even from atmospheric air, the sum of O and CO_2 usually running from 19 to 20 per cent. rather than to 20.6 per cent. I became convinced that the Hempel apparatus, which uses solid phosphorus for absorbing the oxygen, was much superior to the Orsat. It also has the advantage of being much more cleanly, as the reagents are not discolored by use.

There are also some minor points of advantage in the fact that the Hempel apparatus employs wire gauze, which brings the reagents in better contact with the gases than the Orsat, so that the time taken for analysis is much less. The Hempel pipettes are, however, more fragile than those of the Orsat, and more difficult to use in a portable apparatus, in my opinion, although Professor Dennis thinks there is no difficulty or especial liability of breaks in carrying this apparatus around. In order to make a portable apparatus, we have arranged several pipettes of the form shown in Fig. 299, in very much the same manner as in the Orsat apparatus (see Fig. 300), but have arranged them so that all the reagents which were found by Hempel to give best results could be used. This pipette consists of a glass bottle without a top, into which fits a rubber cork, which in turn supports *B*, an expanded tube with a capillary stem *C*. The gas enters in the inner tube, and by its pressure drives the reagent downward in the inner tube and upward in the outer tube. Gauze is placed in the inner tube, which will hold a sufficient amount of the reagent to absorb the components of the flue gas very rapidly. Iron gauze is used for the CO_2 and copper for the CO. The CO cannot be completely absorbed without shaking, and it is recommended that the pipette for the CO be provided with two cocks, so that after the gas has been driven over into the pipette it may be disconnected from the measuring burette and thoroughly shaken to insure complete absorption.

We have also slightly modified the measuring burette. It will be noted from Mr. Hale's discussion that the measuring burette seldom or never is called upon to read to more than 21 per cent., and hence we have had the bulb, or ungraduated part, made to contain 75 cubic centimetres, and the graduated part made much narrower in diameter and graduated to hold 25 cubic centimetres, thus permitting a somewhat more accurate determination than the usual method of graduation.

Professor Dennis has made some recent determinations by analyzing gases known to contain certain constituents, and has determined, by comparing different forms of apparatus, that considerable error is likely to result in the use of the Orsat apparatus.

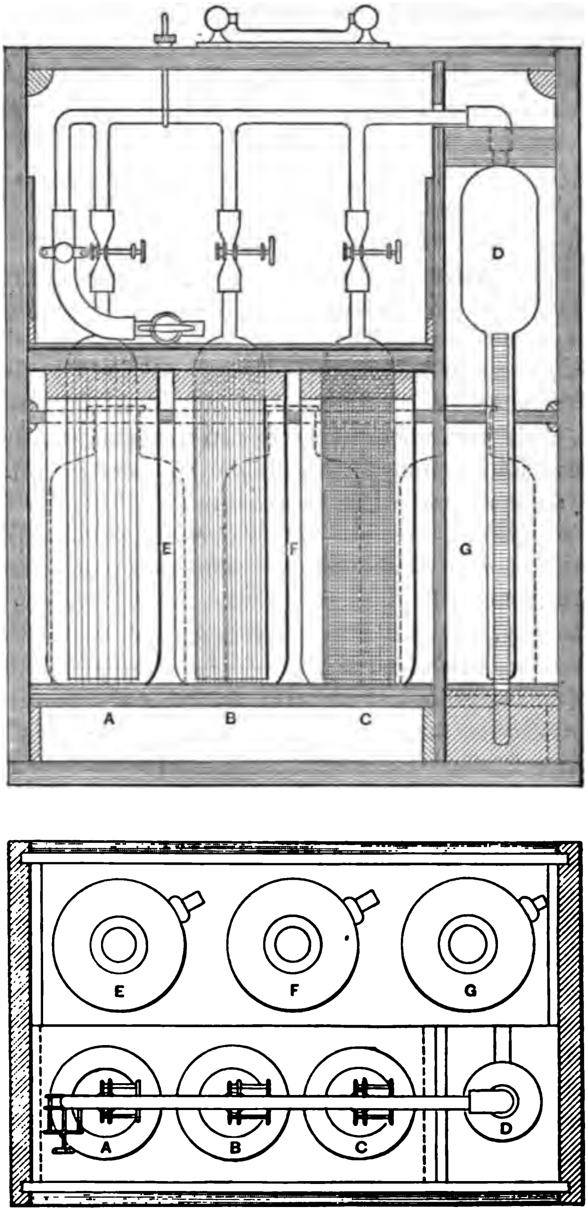

Gas Apparatus

Fig. 300.

Mr. Wm. Kent.—The discussions of Professor Kinealy and Professor Carpenter show the difference which exists between the chemists, and it is going to be a long time before we engineers can settle how to analyze flue gas and not run against the ideas of some chemist. For instance, I had occasion last year to make a long series of boiler tests, including analyses of the gases, and I consulted several chemists about what apparatus to use, and, among others, Professor Dennis of Cornell, the translator of Hempel's book on "Gas Analysis." I was told by all the chemists not to use Orsat's apparatus, but to use the Hempel apparatus. I made several hundred flue gas analyses, and one of the conclusions which I reached agrees with that of Professor Kinealy—that is to say, that a very large quantity of carbonic oxide will be found in the gases. I used the Hempel apparatus, followed the directions in Hempel's book, and checked the results in every way, and I feel certain that I sometimes had as high as 7 per cent. of carbonic oxide. I communicated the result through Professor Carpenter to Professor Dennis, and he says no one can get carbonic oxide in boiler analyses unless the experiments are wrong or he uses the wrong apparatus. So there is a direct issue between Professor Dennis and myself. Mr. Hale's paper shows that he got a great deal of carbonic oxide and Mr. Barrus got a great deal, and there are a great many others who show that carbonic oxide is found, in direct contradiction to the statement made in Hempel's book and confirmed by Professor Dennis. I think I got it.

Professor Carpenter, in his discussion, has referred to the difference of opinion as to how to collect the gas. I have collected it in two or three places, and I think they are all wrong, and I don't know how to collect the gas to-day or how to sample it. I don't think Mr. Hale does. Mr. Hale says: "The local variations are not often caused by the difference of composition of the gases from different parts of the fire, since the gases are pretty well mixed by the time they have passed through the boiler." How does Mr. Hale know that? Is it true that the gases from the right-hand side of the furnace get thoroughly mixed with those on the left hand? I don't think they are mixed at all. He says considerable discretion must be used with a water-tube boiler, but he gives no directions to guide us. Every engineer will have his own discretion in the matter, and no two will do it alike.

Mr. Hale says if an iron tube is used it is well to drill it full of small holes, not larger than one-eighth inch, but this is not necessary, and that if we collect gases through an iron tube it will affect the percentage of carbonic oxide. Professor Dennis says there is no carbonic oxide; Mr. Hale says the iron tube will affect the carbonic oxide. He does not tell us in what direction it will affect it or how much. The Orsat apparatus Professor Carpenter has sufficiently criticised. Some of the criticisms of the Orsat apparatus are well taken—for instance, that it is not as good as the Hempel for the reason that it does not use phosphorus for absorbing oxygen. The one thing that I was most pleased with in my analysis with the Hempel apparatus was its determination of oxygen. Others say the Orsat is not as good as the Hempel for ther reasons. I believe that the Hempel is as good as the Orsat for carbonic acid, but that both admit of large errors due to the absorption of carbonic acid by the water of the collecting jar.

Now in regard to carbonic oxide. In Hempel's book it is said to be advisable to use two absorption pipettes. The gas chemist of the United Gas Improvement Company informs me that he always uses three, and that two are not sufficient. If you use the ordinary solution in a single pipette for determining the carbonic oxide, and analyze a gas which has, say, 7 per cent. of carbonic oxide, and the next gas you have to analyze contains no carbonic oxide, you will find the result a minus quantity—that is, the cuprous chloride absorbs the carbonic oxide, and then gives it up to the next gas that comes along that has less. To check that I put nitrogen through the cuprous chloride bulb and the nitrogen gained in bulk, showing that it had taken up some gas from the cuprous chloride, and then I exploded it with oxygen and hydrogen and got carbonic acid—that is, I had collected carbon in some form from the cuprous chloride. So if an engineer goes into this subject he is going to have lots of trouble, and his results will certainly be full of errors.

In regard to the method of aspirating the gas, Mr. Hale uses a steam aspirator and a section bag. I have found a little rubber pump, like a syringe, recommended by Hempel, to be excellent for clearing out the collecting tube, getting nothing but gas in the tube.

Mr. Hale says if one man takes all the ordinary observations of the tests he will not have much time for gas analyses. He will not have any time for the analyses, or, rather, it will take all his time to make the gas analyses and leave no time to make boiler tests.

Mr. Hale says: "Two degrees Fahr. change makes $\frac{1}{10}$ per cent. error." I found that was true. One of the great difficulties is to keep the temperature constant.

In regard to the heat balance, Mr. Hale says that he can get a heat balance very closely by using gas analysis. He says: "It will account for all but a few per cent. of the heat." In the analyses I made the heat balance did account for from 2 per cent. to 20 per cent. of all the heat. So what was the use of the gas analysis in regard to heat balance? The heat balance, in boiler tests with bituminous coal, is largely a delusion and a snare. In my tests the use of the gas analysis was, as we went along, to determine whether the fire was being fired within a reasonable distance of what it should be. And the most important feature of the gas analysis was the oxygen determination, not the carbonic acid. If you get from 10 to 12 per cent. of carbonic acid, you cannot say that is a good result; for these percentages are compatible either with deficient oxygen or too much oxygen. The same percentages of carbonic acid—that is, 10 to 12 per cent.—may be found when you are taking too little air through the fire, or too much, or just the right amount. The oxygen determination is an indication of whether the air supply is right. If there is between 10 and 4 per cent. of oxygen we have the best result possible. With 4 per cent. of oxygen we have only a trifle of carbonic oxide. With anywhere between 5 and 10 per cent. of oxygen we have no carbonic oxide in the gases. The carbonic oxide analysis, if we can get it correctly, is a good indication of whether the firing is correct or not. The principal use of gas analysis is not to determine the heat balance. It may, in anthracite coal, and some other kinds of coal, give within 3 or 4 per cent. of the correct heat balance; but with some of the Western coals it will not give, sometimes, within 20 per cent. of the correct heat balance, and for the reason that the analysis shows you nothing about the unconsumed hydrogen and the passage of water gas (formed by decomposition of the water in the coal during the first minute or two after firing) up the chimney unburned.

Mr. H. H. Suplee.—In regard to what Mr. Kent has said about collecting samples of gas, I wish to add that one of the best known and most responsible firms of chemists in Philadelphia declines to collect samples over water or in contact with water. They use a suction pump, and pumping enough gas through so as to clear the apparatus of air, they then fill the pipette with as large a sample as they can conveniently compress into it.

*Mr. R. S. Hale.**—Taking up first the question of apparatus, the Hempel apparatus is undoubtedly the best for laboratory use, and in the laboratory is the most accurate. In the boiler room, however, there are errors due to change of temperature from which the Orsat is largely protected by its water jacket, while the Hempel is not; so that the errors of the Hempel may be even greater than those of the Orsat when used in the boiler room. Independently of this, the less time occupied by the Orsat (less than one-half that required by the Hempel), and its greater convenience (only one connection per analysis as compared with five on the Hempel), make it, in my opinion, by far the best, except in the few cases where a small laboratory is available near the boilers.

The modification of the Orsat pipette which is suggested by Professor Carpenter is a very pretty one, and is sure to be adopted. I do not agree with him, however, in shortening the burette so that it will read only 25 per cent. If he had made is 35 per cent. it would have been better, as I have had in practice cases where I had to read to 30 per cent. The limit, when analyzing flue gas, is 34 per cent. Neither do I think that the large cans which he uses for collecting the gas are as convenient as the smaller glass bottles. It is often a great convenience to be able to see that the collection is going on properly, and to see just how much gas has been collected.

The use of phosphorus for the determination of the oxygen it certainly more convenient than the use of the slow-acting pyrogallol, but it has several disadvantages. The first is that, if the apparatus should break, as occasionally happens to all of us, the phosphorus catches fire and is rather dangerous. The second disadvantage is that, if there should be any ethylene present, the phosphorus will not act on the oxygen. Other hydrocarbons—alcohol, ethereal oils, and ammonia—act in the same manner as ethylene. (Footnote, v. Hempel, p. 124.) Thirdly, if there be any carbonic oxide present when the gas is passed over the phosphorus, part will be oxidized into carbonic acid, making the subsequent determination of the carbonic oxide erroneous. My authority for this statement is Dr. A. H. Gill, who has charge of the department of gas analysis of the Massachusetts Institute of Technology. In spite, therefore, of the greater speed and convenience of the phosphorus, I prefer to use the slower acting but safer and more accurate pyrogallol for analyzing flue gas. If

---

* Author's closure, under the Rules.

Professor Carpenter, when analyzing air with the pyrogallol, failed to absorb all the oxygen, it must have been due to a poor solution, as Hempel (p. 116) comes to the conclusion that the last trace of oxygen can be removed with certainty. The fact that the sums of the carbonic acid, oxygen, and either the whole or half of the carbonic oxide, are not constant when analyzing flue gas, is not necessarily due to any mistake, but to the fact that oxides of nitrogen are formed from the air in varying amounts, which do not appear in the analysis, and also to the burning of the hydrogen in the coal, forming H_2O, which does not appear in the analysis. The amount of hydrogen burned varies greatly at different times. Shortly after firing, the amount of hydrogen burned reaches a maximum, and the sum of the carbonic acid and oxygen may not be over 12 per cent. or 14 per cent. Before the next firing, the hydrogen is often so completely burned that there is nothing left in the coal but pure carbon, and the sum of the carbonic acid and oxygen may be the same as the percentage of oxygen in the air.

In regard to the formula suggested by Professor Kinealy, it neglects the moisture in the gases and the air accompanying the oxygen which was used to form part of that moisture by burning the hydrogen in the coal. If the examples given in the appendix to the paper are figured by the formula, it will be seen that there is a sensible, though not a very serious, inaccuracy. The formula is not necessary in the boiler room, as it requires very little practice to be able to regulate the fires on knowing the percentage constituents of the gas, without waiting for the figures of pounds air per pound of carbon. In fact, on account of the varying amounts of hydrogen burned at different times, before and after firing, the percentage constituents are a better guide than even an exact computation of the amount of air.

In regard to the value of the information obtained by analyzing the gases and making out the heat balance, that, so far as the commercial side of it is concerned, must be decided by each one for himself, and the remark made to me a year or so ago by a representative of one of the large boiler companies is, unfortunately, true. "Gas analyses don't sell many boilers." But so far as the engineering side of it is concerned, we have in the gas analysis and the heat balance a weapon which, when properly handled, will tell us a great deal which we can't get from an ordinary boiler test. The expense is not very great, and even if, sometimes, we do account for more heat than there is in the coal, that is better than making a mistake when there is no check on our work. Sometimes we do not account for all the heat—2 per cent., or even 20 per cent., as Mr. Kent has at times found missing. But in the ordinary test all the heat, except what is in the steam, is unaccounted for, and an attempt to tell the reasons of a good or bad boiler performance, even if partially unsuccessful, is better than to give up without even trying.

DCCXLI.*

HYGROMETRIC PROPERTIES OF COALS.

BY R. C. CARPENTER, ITHACA, N. Y.
(Member of the Society.)

THE investigation described in the following paper was undertaken for the purposes of ascertaining the relative qualities of various coals when in the same physical condition with reference to absorbing moisture from the atmosphere. The investigation was suggested by noticing the losses or gains which took place in different samples of coal corresponding to the changes in the humidity of the atmosphere.

Two lines of investigation were undertaken:

First, a number of samples of different coals were reduced to a uniform physical condition by grinding or powdering; were then thoroughly dried, and afterward simultaneously exposed to a saturated or nearly saturated atmosphere, for a period of from six to eight days as required, to obtain constant weight. The weight of moisture was determined by taking the difference between the first and final weights, and this result was checked by thoroughly drying and reweighing.

Second, an investigation was made to determine the effect of the size of particles upon the power to absorb moisture: the investigation being similar in nature to that previously described.

The method of drying in all cases was the same. The coal was heated to a temperature of from 220 to 240 degrees Fahr., and maintained in that condition for one hour.

Results indicate a very great difference in the absorptive power of different coals when in the same physical state, but show, however, a striking similarity in this respect of coals which are known to possess similar qualities from the same geographical districts. Thus, the various samples of anthracite absorbed amounts of moisture which varied from slightly under 5 to

---

* Presented at the Hartford meeting (May, 1897) of the American Society of Mechanical Engineers, and forming part of Volume XVIII. of the *Transactions*.

slightly over 6 per cent. of the weight of the dry coal; the coking coals from Western Pennsylvania absorbed amounts which varied from slightly less than 1 per cent. to about 3 per cent.; the Western bituminous coals absorbed from 8 to 14 per cent. Pocahontas absorbed an amount greater than the anthracites.

The first investigation seemed to indicate that, independent of the physical condition, different coals vary greatly in their hygrometrical properties, and that, with few exceptions, the power of absorbing and retaining moisture is less as the calorific value is greater.

Thus the results show that the maximum amount of moisture which would be absorbed by coals powdered so as to pass No. 80 sieve, were on the various tests as follows:

	Anthracites.	Eastern Coking Coals.	Illinois and Indiana Coals.
	%	%	%
	6.37	0.69	8.96
	5.03	1.29	14.10
	5.56	1.94	10.60
	5.70	3.16	4.65
	5.26	2.10	10.20
	4.66	2.36	7.80
	6.00		
	5 07		
	6.04		
	6.34		
Average.	5.60	1.93	9.77

The effect of the size of particle is quite decided. The larger the particle the less the weight of moisture which is absorbed. This indicates that the absorptive power is in part due to capillary action of the surface (Fig. 301).

In the second investigation the pieces of coal were made as nearly of definite sizes as possible considering their irregular shape, having diameters respectively one inch, half inch, quarter inch and powdered so as to pass through sieves of 60 to the inch. In these experiments there were used two samples of anthracite coal, one obtained by breaking up pieces of egg coal, the other pieces of pea coal; two specimens of bituminous coal, one an Illinois coal and the other a Cumberland coking coal. The results of this investigation show an increase in absorptive power as the size of the particle is diminished. The results are slightly irregular, due probably to irregularities in the samples selected, but the variation, however, is no more than would probably be found in the selection of samples.

In connection with the drying of coals at temperatures above the boiling point a number of experiments were made to determine whether there was any sensible loss of volatile matter, but so far as could be determined by repeated trials, alternately drying and moistening, and by varying time of drying from one to three hours, no loss of volatile matter could be detected, and it seems exceedingly probable that no loss of importance occurs at temperatures below 300 degrees Fahr.

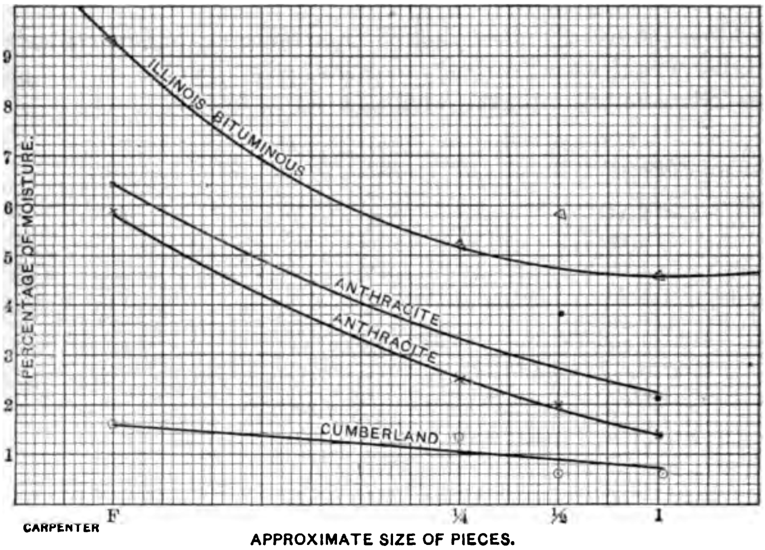

Fig. 301.

For this reason it would seem entirely safe to use this method of drying coals in testing boilers, as it is easily applied, and has given very satisfactory and uniform results for the writer whenever used. The following tables give the results of the various observations and the names of the coals from which the experiments were made. The observations were taken by C. E. Houghton, M.E., and E. C. Sickles, M.E.

EFFECT OF SIZE OF PARTICLE.

KIND OF COAL	BITUMINOUS COAL.								ANTHRACITE LEHIGH.							
	Illinois.				Cumberland.				Broken Egg.				Broken Pea.			
Size of coal	1	½	¼	Fine.	1	½	¼	Fine.	1	½	¼	Fine.	1	½	¼	Fine.
Weight of pan and coal, Feb. 8	.2012	.1167	0665	.1522	.1300	.0692	.0544	.1175	.5300	.4113	.2552	.1768	.2959	.1916	.1214	.1581
Weight of pan and coal, March. 15	.2084	.1210	.0678	.1615	.1319	.0703	.0550	.1223	.5367	.4187	.2606	.1846	.2975	.1926	.1224	.1548
Total gain in weight, Feb. 8 to March 15	.0072	.0043	.0013	.0093	.0019	.0011	.0006	.0048	.0067	.0074	.0054	.0078	.0016	.0010	.0010	.0017
Actual weight of coal	.1582	.0741	.0247	.1075	.0836	.0279	.0121	.0747	.4810	.3649	.2113	.1811	.2593	.1506	.0764	.1071
Per cent. gain moisture	4.55	5.801	5.26	9.30	2.17	3.765	5.612	6.424	1.394	2.028	2.55	5.95	.617	.664	1.31	1.587
Average	3	3	3	3	3	3	3	3	3	3	3	3	2½	2½	2½	2½

ANTHRACITE COALS.

	SOURCE OF COAL.	Weight of Trays Dry.	Weight of Dry Tray and Dry Coal, Dec. 3, 1895.	Weight of Wet Coal and Wet Tray, Dec. 4, 1895.	Same. Dec. 5, 1895.	Same. Dec. 6, 1895.	Same. Dec. 7, 1895.	Same. Dec. 9, 1895.	Same. Dec. 10, 1895.	Same. Dec. 11, 1895.	Weight of Dry Coal.	Weight of Wet Coal.	Weight of Moisture.	Maximum Moisture % of Dry Coal.
1	Scranton, Pa., Big Vein, Oxford Mine, 306 feet below surface. 5/12/'92	.00605	.0208	.0210	.0219	.0220	.0220	.0220	......	......	.01475	.01575	.0010	6.37
2	Scranton, Pa., Diamond Vein, Mt. Pleasant Mine, 280 feet below surface. 5/2/'92	.0060	.0211	.0214	.0220	.0221	.0221	.0221	......	......	.0151	.0159	.0008	5.03
3	Scranton, Pa., Anthracite, Lackawanna Coal. Fair sample from six cans	.0058	.0211	.0214	.0222	.0223	.0223	.0223	......	......	.0153	.0163	.0009	5.56
4	Newark, N. J., Nut Coal. 8/24/'92	.00625	.0211	.0213	.0222	.0222	.0223	.0223	......	......	.01485	.0158	.0009	5.70
5	Newark, N. J., Buckwheat Coal. 8/22/'92	.00585	.0205	.0215	.0216	.0217	.0216	.0216	......	......	.0149	.0160	.0008	5.26
6	York Farm, 1 Buckwheat Coal, L. V.	.0058	.0208	.0210	.0217	.0217	.0218	.0218	......	......	.0150	.0158	.0007	4.66
7	Scranton, Pa., Diamond Vein, Oxford Mine, 195 feet below surface. 5/8/'92	.0063	.0213	.0216	.0223	.0224	.0223	.0223	......	......	.0150	.0158	.0009	6.00
8	Scranton, Pa., Clark Vein, Upper Bend, Oxford Mine, 380 feet below surface. 5/8/'92	.0062	.0199	.0201	.0208	.0206	.0209	.0209	......	......	.0137	.0145	.0007	5.07
9	Scranton, Pa., Clark Vein, Mt. Pleasant Mine, 365 feet below surface. 5/8/'92.	.0060	.0209	.0212	.0220	.0221	.02205	.02205	......	......	.0149	.0158	.0009	6.04
10	Buckwheat Anthracite, Lehigh	.0061	.0203	.0209	.0214	.0214	.0214	.0214	......	......	.0142	.0151	.0009	6.34

COKING COALS.

11	Clearfield Co., Eureka Coal from E. L. Almy, Ithaca	.0062	.0207	.0207	.0210	.0210	.0210	.0210	......	......	.0145	.0146	.0001	.69
12	Cooperstown, Nova Scotia, Cooperstown Coal Co.	.0054	.0209	.0211	.0213	.0214	.0214	.0214	......	......	.0155	.0158	.0002	1.29
13	Connelsville Coking Coal, Liesenring Mine	.0053	.0219	.0221	.0223	.0224	.0224	.0224	......	......	.0166	.0169	.0003	1.81
14	From Elmira Illuminating Co.	.0058	.0212	.0213	.0217	.0218	.0218	.0218	......	......	.0154	.0158	.0003	1.94
15	Coking Coal, Lewickly Mine, H. C. Frick C. Co.	.0060	.0218	.0220	.0223	.0224	.0224	.02237	.0225	.0225	.0158	.0161	.0005	3.16
16	Coal used in Blacksmith shop, Sibley	.0062	.0204	.0207	.0209	.0210	.0210	.0210	......	......	.0142	.0146	.0003	2.10
17	Monongahela Co., W. Va., Little Pittsburg Vein	.0059	0185	.0187	.0190	.0191	.0191	.0191	......	......	.0126	.0130	.0003	1.41

ILLINOIS AND INDIANA.

18	Chicago, Ill., Edison Coal. 10/8/'92	.0058	.0203	.0210	.0214	.0215	.0215	.0217	.02185	.02185	.0145	.0157	.0013	8.96
19	Illinois, Tohica	.0055	.0204	.0211	.0218	.0220	.0222	.0225	......	......	.0149	.0168	.0021	14.1
20	Centralia, Illinois Coal	.0059	.0201	.0208	.0214	.0215	.0215	.0217	.0219	.0219	.0142	.0156	.0015	10.6
21	Indiana, New Pittsburg	.0058	.0209	.0215	.0217	.0217	.0218	.0218	......	......	.0151	.0158	.0007	4.65
22	Illinois, Du Quoin Coal	.0058	.0215	.0222	.0229	.0231	.0232	0233	.0234	.0234	.0157	.0173	0016	10.2

Loss by weight of each tray in drying = .0002.

DISCUSSION.

Mr. R. S. Hale.—Professor Carpenter's paper is exceedingly interesting and valuable, but I fail to find in it the data to make clear one or two points, and I disagree partially with the statement on the bottom of page 940 as to a safe method to be used in testing coals for moisture.

In regard to the absorptive capacity of coals of different sizes, I have found when drying two samples of coal, the one of lump size and the other of fine coal, that at first the fine coal lost by far the most weight, but that toward the end of the experiment it was the lump coal which showed the greatest differences on successive readings. The indication was that if the experiment had been continued long enough both the lump and the fine coal would have given the same results. Now, in the experiments in the paper it is shown on page 942 that it took one week for some samples of fine coal to reach a constant condition. The lump samples on page 941 were, some of them, eight or ten times as thick as the samples of fine coal, and might, therefore, be expected to take a proportionate time before reaching a constant condition. The experiment on page 941 was, however, apparently continued only five weeks, and no data are given to show that the lump coals might not have gone on increasing in weight for some time, nor are there any data to show that before beginning the experiment they had been brought to the same condition as the samples of fine coal. In regard to the latter point, as to whether the samples were in the same condition when beginning the experiment, it is implied that the coals were dried for one hour at 220 to 240 degrees Fahr., and this brings me to the point on which I take issue with Professor Carpenter. On the bottom of page 940 he states that it is entirely safe to use this method of drying coal in testing boilers, saying that he finds no loss of volatile matter after drying for three hours. The chief difficulty with this or any method of drying yet proposed is not that volatile matter is given off, but that oxygen is absorbed while drying. Fischer (*Chem. Tech. v. d. Brennstoffe*, p. 108) gives the following experiment: Coal was dried for three hours in two litres of air which had previously been freed from all moisture and carbonic acid. The temperature was 110 to 100 degrees C. After the drying, the air was found to contain 1.844 per cent. of water and 0.196 per cent. of carbonic acid, carbon, and hydrogen, making 2.04 per cent. in all. But the loss of weight of the coal was only 1.778 per cent., showing that the coal had been absorbing oxygen. The same action has been noticed by many experimenters. In my own practice I once dried a sample of coal until it showed a negative amount of moisture. Prof. V. B. Lewes speaks of an increase of weight of 2 per cent. when heated to 250 degrees Fahr. after previous drying, an amount which would not be negligible in a boiler test. If Professor Carpenter has in use any method which gets rid of this difficulty, it is to be hoped that he will give the details to the Society. The absorption of oxygen by the coal is now known to be the cause of spontaneous combustion, and any method of preventing such absorption will be of great importance to others besides those of us who test boilers.

Mr. Wm. Kent.—I think this paper of Professor Carpenter's results, in some degree, from a correspondence which I had with him during the past year on the subject or drying and analyzing coal. In connection with a series of boiler tests which I made last year, I sent samples of twenty different coals to Professor Carpenter to have him make calorimeter tests and proximate analyses, and called his attention to the necessity of thoroughly drying the coal; and I communicated to him my method of drying coal, which Professor Carpenter has since confirmed—that is, that the coal must be heated to over 240 degrees—say, from 240 to 300 degrees. I informed him at the time that I had found that there is no loss whatever of volatile matter at that temperature. The first public announcement which I made of that fact was in revising my closing discussion of the paper read at the St. Louis meeting (*Transactions*, vol. xvii., p. 671), answering a criticism made concerning drying coal at too high temperature. In that discussion I stated that I found no loss in volatile matter at a temperature below 300 degrees, and Professor Carpenter now confirms that statement. Mr. Hale takes issue with Professor Carpenter, but offers no data to substantiate his position. It is often said by writers on this subject that volatile matter is lost in drying coal even as low as 212 degrees. I have not, however, been able to find any reference showing any proof of that statement, and my own results with twenty different kinds of coal, running from Pittsburg out to Illinois, have never shown any reduction of weight after heating even to 350 degrees, but in all cases, after reaching a minimum weight, a slight increase in weight took place, probably due to oxidation. The method which I finally used to determine the moisture in these coals may be described briefly as follows: Having obtained an average sample of the coal used in the boiler tests, using especial precautions to prevent its being air-dried during the process of sampling, it is run through a coffee mill adjusted so as to make rather coarse grains; 40 grammes are then dried in a sand bath at from 240 to 280 degrees, until it has reached a minimum weight (as determined by repeated weighings after heating an hour or more between each weighing) and begins to show an increase in weight. The weighings were made on a torsion balance prescription scale, to one centigramme, or one part in 4,000.

So far as I have gone, this is the best way I know of to determine the moisture in coal; but the moisture thus determined will not be quite high enough—that is, there may be an error of one-quarter of a per cent. due to oxidation of the coal. Now, in regard to the proofs of this method of testing. The duplication of results was extraordinary, frequently coming to one or two tenths of one per cent., and after reaching the minimum the increase by oxidation would be an extremely small fraction, usually not over 0.1 per cent. The question now is, Did we lose volatile matter or not? One test was made by putting the coal into a closed retort, heating it, and passing the gaseous products, if any, into a jar inverted in water. On heating to 350 degrees no gases were found. Another was to take a piece of lump coal, which to all appearance was dry, from under a shed, where it had been for a long time, and treat it by this rapid method of heating to from 240 to 280 degrees; and take a duplicate piece and put it in a desiccator over concentrated sulphuric acid, and let it remain two months. Two pieces of Illinois coal thus treated lost 14 per cent. of moisture in two months by each of the two methods of drying. Then, again, taking that dried coal which was dried by heating to 240 or 280, and exposing that, where it would not be touched, to the ordinary air for two months, and it absorbed back the whole 14 per cent. So the results were checked in several different ways. There can be, no doubt, other methods devised by chemists to determine it with still greater accuracy, by taking the retort of coal and filling it full of nitrogen gas to avoid oxidation, heating it, absorbing the moisture driven off in chloride of calcium, and determining the moisture by the increase in weight of the chloride of calcium as well as by the decrease in weight of the coal.

Mr. Gus. C. Henning.—The experiments in the paper are based on a fundamental method, which is criticised in the paper itself. At the bottom of page 939 it says: "The effect of the size of particles is quite decided. The larger the particle the less the weight of moisture which is absorbed. This indicates that the absorptive power is in part due to capillary action of the surface." In spite of this fact, Professor Carpenter has made no attempt to get a uniform size. He says in the case of fine powdered coal he passed it all through a No. 80 sieve. Now, passing it through an 80 sieve means that it has all the degrees of fineness of powder which has passed through that sieve. What he should have done is to pass all of the powdered material through a No. 80 sieve, and then take out all the very fine material by using a finer sieve; then a material which is nearly uniform would be obtained. And he must determine beforehand how much finer the second sieve must be in order to get an appropriate sieve for the purpose of his work, because the amount of material that is used and the moisture contained therein are very minute indeed. Then we come to the next paragraph, where he describes the use of larger shapes—one inch, half inch, quarter inch, and powdered so as to pass through sieves of 60 to the inch. Here again is the same error. It is pointed out that there are errors due to irregular sizes, and I again ask why does he not separate the pieces and get one uniform grade? Then he says the shapes were irregular. I should say it is not very difficult to obtain pieces of anthracite and of soft coal of various kinds which are sized very closely, even if it takes a stone or a file or something else to get them to size. There is one thing which I think is rather striking, and that is the small amount of absorption in coking coal, while in the anthracite coal it is very much more. There is a great variation in the Eastern coking coal in the figures given. It will be seen that it varies from nearly 7 up to 13.16, while in the anthracite coal the variation is very small—from 4.66 to 6.37. That shows that in the case of anthracite the results were tolerably good, but in the case of Eastern coking coals he found such a great variety that he is not justified in drawing the conclusion that the average is 1.92. He cannot grade the two materials together. In the case of the Illinois coal he has taken coal that has a moisture of 4.65 up to 14.10. Those cannot be averaged. There should be two averages, which is in one case 12½ per cent. and in the other case not over 6 per cent., while his average is 9.77. These should be separated into different kinds of coal, and then the average will appear very much better; and I think when that is taken into account and when this difference in size is eliminated his results will be much more uniform than they are given in the paper.

Mr. Kent.—I did not say anything in my remarks about the sizes mentioned in Professor Carpenter's paper. I simply wish to add that I found the same amount of moisture in a sample of lump coal one or two inches in diameter which I found in a duplicate sample that was crushed in a coffee mill, providing the drying was continued long enough. It took longer to dry the lump coal. Now, the capillary attraction on the surface does account largely for the moisture in the fine coal, and it seems that in the Western coking coals the moisture is of the same character as the moisture in wood; and I will ask to add to my discussion a quotation from Professor Johnston's recent work, showing just what happens when you dry a piece of wood. You never, at any ordinary temperature, can get a piece of pine wood dry. If you keep the heat on you will finally destroy the wood. If you get it what they call kiln-dry and then expose it to ordinary atmosphere, it will continue absorbing moisture until it has the normal amount of moisture. So, with the Illinois coals they act the same way: if you dry them and then expose them to the ordinary air, they will get all the moisture back again and hold it by capillary attraction in the minute particles inside the coal.

*Prof. R. C. Carpenter.**—There seems little to be stated in respect to the discussion, except to clear away some misapprehensions which are evidently the results of a misunderstanding of the case.

In respect to Mr. Hale's remarks, I would say, first, that there is no statement on page 941 that it took four weeks for the coal to attain its driest condition, nor was any such an impression intended to be conveyed. The entire experiment, which included many repeated dryings and moistenings, occupied the time of four weeks. The actual time required to dry a sample, instead of being four weeks, was less than one hour, in view of which Mr. Hale's inference and argument seem entirely gratuitous. It is doubtless true that a large piece of lump coal would dry more slowly than fine coal, but that question has not been under consideration in the paper. I do not, however, enter upon the question whether or not it would contain more moisture. In regard

---

* Author's closure, under the Rules.

to the gain or loss of weight, I would say that we have carried on some very extensive experiments in relation to the amount of moisture which is absorbed, driven off, and reabsorbed, using for this purpose samples of coal from fifteen mines in this country which were widely separated. The publication of this investigation will be given in full at a later time, but the investigation seems to show—First: That with the most volatile coals there is no sensible loss of weight due to the driving off of volatile matter under a temperature of 380 degrees Fahr., and with anthracite coals there is no sensible loss under a temperature of 700 degrees Fahr. Second: Regarding the gain in weight which we found to commence under certain conditions after the coal was exposed to the atmosphere, and which Mr. Hale attributes to the absorption of oxygen, we found that if the coal was weighed in the presence of sulphuric acid, or before it had any chance to absorb moisture from the air, no gain was experienced in any case. We, furthermore, found that coal would absorb a certain amount of moisture from the air almost instantly, and in a saturated atmosphere it would return to its original weight in the course of fifty to eighty minutes. This investigation leads me to believe that the gain in weight to which Mr. Hale refers is due, not to absorption of oxygen from the atmosphere, but to the absorption of moisture; and I feel very certain that if Mr. Hale will prevent his coal from absorbing moisture, he will find no gain in weight under any conditions whatever.

I am more than ever convinced from this latter investigation that it is perfectly safe and proper to dry coals at a temperature of 350 degrees, and believe there will be neither further decrease or increase, provided the coals can be weighed entirely free from the chance of absorbing moisture.

Mr. Kent's experience, which is backed up by a very extensive investigation, is entirely in harmony with my own, and I believe it absolutely correct.

Mr. Henning's discussion with relation to the size of pieces is, it seems to me, of little weight, and if of any importance whatever, the matter is entirely answered by referring to the diagram on page 940; there it will be noticed that the effect of size is not of the importance that Mr. Henning would have us believe—in fact, I may say that, if the experiment had been extended over a sufficiently long time, *it would absolutely be without influence.* The only effect that size of particle has upon the result

is to vary the time which is required for the absorption of a given amount of moisture, and had the experiments continued over a longer time, it would have been absolutely without effect. The paper shows a remarkable difference in the absorptive power of different coals; but, on the other hand, it shows a remarkable uniformity in coals from certain districts and a lack of uniformity in coals from other districts. It is not, however, to be presumed that the averages, for instance, in the coal districts of Illinois and Indiana, when there is a great variation, are of any great value in indicating the amount of moisture from any mine.

The writer has reason to believe that the cause which lead to the investigation described in the paper was not understood by Mr. Henning; otherwise the point which he has made regarding the size of coal would not have seemed so important. The following explanation may throw some light on this point, and had it been stated in the paper, I feel that such a misunderstanding would not have arisen.

In reviewing the work connected with certain boiler tests, it was noted that in some instances the correction for moisture in the coal was only 3 or 4 per cent., while in others it was as high as 15 per cent. This latter number was so very great that the writer was inclined to doubt the accuracy of the results of the boiler tests in question. The investigation was undertaken to find out the capacity of different coals under the same condition to absorb and retain moisture, and quite naturally the coals were reduced to the same physical condition and to a condition in which they would absorb quickly the maximum amount of water. The investigation was simply a comparative one, the important step that all the coals be in the same physical condition being fully complied with. The effect of slight variation in sizes was determined by later investigation fully described in the paper.

to the gain or loss of weight, I would say that we have carried on some very extensive experiments in relation to the amount of moisture which is absorbed, driven off, and reabsorbed, using for this purpose samples of coal from fifteen mines in this country which were widely separated. The publication of this investigation will be given in full at a later time, but the investigation seems to show—First: That with the most volatile coals there is no sensible loss of weight due to the driving off of volatile matter under a temperature of 380 degrees Fahr., and with anthracite coals there is no sensible loss under a temperature of 700 degrees Fahr. Second: Regarding the gain in weight which we found to commence under certain conditions after the coal was exposed to the atmosphere, and which Mr. Hale attributes to the absorption of oxygen, we found that if the coal was weighed in the presence of sulphuric acid, or before it had any chance to absorb moisture from the air, no gain was experienced in any case. We, furthermore, found that coal would absorb a certain amount of moisture from the air almost instantly, and in a saturated atmosphere it would return to its original weight in the course of fifty to eighty minutes. This investigation leads me to believe that the gain in weight to which Mr. Hale refers is due, not to absorption of oxygen from the atmosphere, but to the absorption of moisture; and I feel very certain that if Mr. Hale will prevent his coal from absorbing moisture, he will find no gain in weight under any conditions whatever.

I am more than ever convinced from this latter investigation that it is perfectly safe and proper to dry coals at a temperature of 350 degrees, and believe there will be neither further decrease or increase, provided the coals can be weighed entirely free from the chance of absorbing moisture.

Mr. Kent's experience, which is backed up by a very extensive investigation, is entirely in harmony with my own, and I believe it absolutely correct.

Mr. Henning's discussion with relation to the size of pieces is, it seems to me, of little weight, and if of any importance whatever, the matter is entirely answered by referring to the diagram on page 940; there it will be noticed that the effect of size is not of the importance that Mr. Henning would have us believe —in fact, I may say that, if the experiment had been extended over a sufficiently long time, *it would absolutely be without influence.* The only effect that size of particle has upon the result

is to vary the time which is required for the absorption of a given amount of moisture, and had the experiments continued over a longer time, it would have been absolutely without effect. The paper shows a remarkable difference in the absorptive power of different coals; but, on the other hand, it shows a remarkable uniformity in coals from certain districts and a lack of uniformity in coals from other districts. It is not, however, to be presumed that the averages, for instance, in the coal districts of Illinois and Indiana, when there is a great variation, are of any great value in indicating the amount of moisture from any mine.

The writer has reason to believe that the cause which lead to the investigation described in the paper was not understood by Mr. Henning; otherwise the point which he has made regarding the size of coal would not have seemed so important. The following explanation may throw some light on this point, and had it been stated in the paper, I feel that such a misunderstanding would not have arisen.

In reviewing the work connected with certain boiler tests, it was noted that in some instances the correction for moisture in the coal was only 3 or 4 per cent., while in others it was as high as 15 per cent. This latter number was so very great that the writer was inclined to doubt the accuracy of the results of the boiler tests in question. The investigation was undertaken to find out the capacity of different coals under the same condition to absorb and retain moisture, and quite naturally the coals were reduced to the same physical condition and to a condition in which they would absorb quickly the maximum amount of water. The investigation was simply a comparative one, the important step that all the coals be in the same physical condition being fully complied with. The effect of slight variation in sizes was determined by later investigation fully described in the paper.

DCCXLII.*

THE LAWS OF CYLINDER CONDENSATION.

BY ARTHUR L. RICE, BROOKLYN, N. Y.
(Junior Member of the Society.)

THE losses in the steam engine, aside from the thermodynamic loss which is due to the method of transformation and cannot be avoided so long as the present method is used, are those of clearance, radiation, initial condensation, and friction. The greatest cause of loss is condensation, as will be seen by reference to Fig. 302, where the relation of steam consumption and ratio of expansion is shown for 120 pounds absolute. Curve *A* is for the ideal engine of Rankine, with non-conducting cylinder, no condensation and no clearance ; *B* for the same engine, with the loss due to 7.6 per cent. clearance added ; *C* for the same engine, with conducting cylinder and condensation loss ; *D* for the brake power of the engine ; *i.e.*, with friction loss. The vertical distance along an ordinate between *A* and *B* measures the increase in steam consumption due to clearance, between *B* and *C* that due to condensation, between *C* and *D* that due to friction. *A'*, *B'*, *C'*, and *D'* are corresponding efficiency curves, and vertical distances between them measure corresponding losses of efficiency. The radiation loss was too small a variation to be shown on the diagram.

The importance of the condensation loss is also shown in the business world by the great expense incurred for jacketing and compounding engines in order to reduce it somewhat, and by the saving effected by engines with these preventive features over those without them. By the means mentioned, the condensation has been reduced greatly and much higher pressures can be used, with a proportional degree of expansion and corresponding economy ; but if pressures are to go on rising, it is impor-

---

* Presented at the Hartford meeting (May, 1897) of the American Society of Mechanical Engineers, and forming part of Volume XVIII. of the *Transactions*.

tant to reduce the loss still further, and in order to do this we must get at, so far as possible, the laws governing condensation. For engineering purposes the condensation per horse-power hour, or expressed as a per cent. of total steam used, would seem most convenient, and these two quantities were investigated. The latter was found to be the one for which most satisfactory

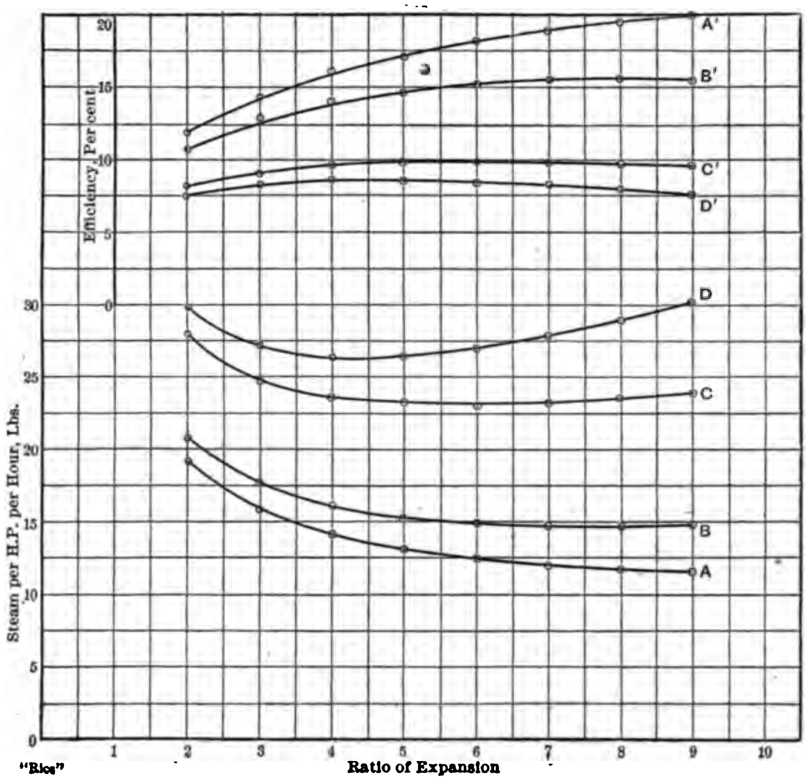

FIG. 302.

results could be obtained, and has been retained in the discussion.

THE ACTION OF CONDENSATION.

For the sake of a better understanding of the phenomenon of condensation it is worth while to see what are the causes leading to it. Consider first the action of the Rankine ideal engine. This has a non-conducting cylinder, admits steam with immediate rise in pressure, maintains the pressure constant to cut-off, expands adiabatically, releases with immediate drop to back pressure, and exhausts at constant pressure. The cylinder will not absorb heat. There is no clearance and no chance for heat loss except that due to the nature of the cycle. During admission the work is due to the generation of new steam in the boiler, that in the cylinder acting simply as a medium for the transmission of force; after cut-off, the steam works expansively, transforming some of its internal energy into work, and, as a consequence, some of the steam must condense in order to furnish the heat so transformed. The condensation goes on throughout the mass of the steam, and the water particles thus formed are held in suspension in the form of a mist. The amount of this condensation is proportional to the amount of expansion, and is but a small percentage of the total steam except for very high ratios of expansion. The condensed steam which may cling to the sides and heads of the cylinder and to the piston will remain in the cylinder except as swept out by the piston on the exhaust stroke. That which remains in suspension in the mass of the steam will be carried out at the exhaust with the steam. The water which remains clinging to the walls of the clearance space will fall, during exhaust, to the temperature corresponding to exhaust pressure. On admission this water will take up heat from the incoming steam until it rises to the temperature of that steam, and to furnish the heat needed some of the fresh steam will be condensed. The condensation will be due to contact with the cooler water and will be local at the points on surfaces where such water exists. The water formed by this action will be added to that already existing, thus increasing the size of the drops or the thickness of the film on the clearance surfaces. During admission no further condensation will occur, but during expansion there will be the same condensing action as on the previous stroke throughout the mass of the steam; there will be the same tendency for some of the water thus formed to cling to the walls as on the first stroke, and some of it will unite with the film already on the clearance surfaces to increase its thickness. To evaporate at exhaust pressure the water so added would require the expenditure by the water film of the latent heat of vaporization at that pressure for such amount of water as is evaporated. There is available only the heat due to the fall of the water film from the temperature of admission to that of exhaust. This is obviously not sufficient to evaporate both the addition from condensation during admission and that from expansion, so that the clearance surfaces arrive at admission with a little more water upon them than at the end of the first exhaust stroke. The same thing will occur in succeeding strokes, the film of water growing a little thicker during each cycle until the limit is reached when more water refuses to adhere to the clearance surfaces. Thus we see that to have initial condensation we do not need a conducting cylinder, only adiabatic expansion. In regard to this Isherwood says that the "initial cause of condensation is the dew deposited from external radiation and adiabatic expansion." *

The larger the expansion the sooner will the condensation come to its limit, but it will reach it sooner or later. If there be no expansion there will be no condensation.

Let us now consider what will be the course of events if the cylinder be capable of absorbing and giving up heat. Let the cylinder be as warm as the entering steam and the walls free from moisture. During admission for the first stroke we shall have the same action as in a non-condensing cylinder; during expansion there will be condensation, as before, and the same tendency for some of the moisture to cling to the walls; but the walls were hot to start with, and, as the water touches them—it being cooler than they—heat will flow into it and some of it be reëvaporated. Thus the walls will be kept dry until exhaust. During exhaust some heat will flow into the cold steam from the cylinder, but the amount will be small on account of the poor conductivity of the layer of dry steam next the cylinder walls. At admission there will be no layer of water to be heated by the incoming steam; but the walls themselves have given up some of their heat, and hence their temperature has fallen below that of the admission steam, and heat will be required to restore them to their original condition. This will call for the condensation of steam to furnish the heat, and the water from this local condensation will be deposited on the surfaces to which the heat is surrendered. This will continue, on the fresh surface exposed to the steam by the moving piston, up to the point of cut-off. During expansion the walls and their water

---

* *Engineering Researches*, vol. i., p. 130.

ANTHRACITE COALS.

	SOURCE OF COAL.	Weight of Trays Dry.	Weight of Dry Tray and Dry Coal, Dec. 3, 1895.	Weight of Wet Coal and Wet Tray, Dec. 4, 1895.	Same. Dec. 5, 1895.	Same. Dec. 6, 1895.	Same. Dec. 7, 1895.	Same. Dec. 9, 1895.	Same. Dec. 10, 1895.	Same. Dec. 11, 1895.	Weight of Dry Coal.	Weight of Wet Coal.	Weight of Moisture.	Maximum Moisture % of Dry Coal.
1	Scranton, Pa., Big Vein, Oxford Mine, 306 feet below surface. 5/12/'92	.00605	.0208	.0210	.0219	.0220	.0220	.0220	......	......	.01475	.01575	.0010	6.87
2	Scranton, Pa., Diamond Vein, Mt. Pleasant Mine, 280 feet below surface. 5/2/'92	.0060	.0211	.0214	.0220	.0221	.0221	.0221	......	......	.0151	.0159	.0008	5.08
3	Scranton, Pa., Anthracite, Lackawanna Coal. Fair sample from six cans	.0058	.0211	.0214	.0222	.0223	.0223	.0223	......	......	.0153	.0168	.0009	5.56
4	Newark, N. J., Nut Coal. 8/24/'92	.00625	.0211	.0213	.0222	.0222	.0223	.0223	......	......	.01485	.0158	.0009	5.70
5	Newark, N. J., Buckwheat Coal. 8/22/'92	.00535	.0205	.0215	.0216	.0217	.0216	.0216	......	......	.0149	.0160	.0008	5.26
6	York Farm, 1 Buckwheat Coal, L. V.	.0058	.0208	.0210	.0217	.0217	.0218	.0218	......	......	.0150	.0158	.0007	4.66
7	Scranton, Pa., Diamond Vein, Oxford Mine, 195 feet below surface. 5/8/'92	.0063	.0213	.0216	.0223	.0224	.0223	.0223	......	......	.0150	.0158	.0009	6.00
8	Scranton, Pa., Clark Vein, Upper Bend, Oxford Mine, 380 feet below surface. 5/8/'92	.0062	.0199	.0201	.0208	.0206	.0209	.0209	......	......	.0137	.0145	.0007	5.07
9	Scranton, Pa., Clark Vein, Mt. Pleasant Mine, 365 feet below surface. 5/8/'92.	.0060	.0209	.0212	.0220	.0221	.02205	.02205	......	......	.0149	.0158	.0009	6.04
10	Buckwheat Anthracite, Lehigh	.0061	.0203	.0209	.0214	.0214	.0214	.0214	......	......	.0142	.0151	.0009	6.34
	COKING COALS.													
11	Clearfield Co., Enreka Coal from E. L. Almy, Ithaca	.0062	.0207	.0207	.0210	.0210	.0210	.0210	......	......	.0145	.0146	.0001	.69
12	Cooperstown, Nova Scotia, Cooperstown Coal Co.	.0054	.0209	.0211	.0213	.0214	.0214	.0214	......	......	.0155	.0158	.0002	1.29
13	Connelsville Coking Coal, Liesenring Mine	.0053	.0219	.0221	.0223	.0224	.0224	.0224	......	......	.0166	.0169	.0003	1.81
14	From Elmira Illuminating Co.	.0058	.0212	.0213	.0217	.0218	.0218	.0218	......	......	.0154	.0158	.0003	1.94
15	Coking Coal, Lewickly Mine, H. C. Frick C. Co.	.0060	.0218	.0220	.0223	.0224	.0224	.02237	.0225	.0226	.0158	.0161	.0005	3.16
16	Coal used in Blacksmith shop, Sibley	.0062	.0204	.0207	.0209	.0210	.0210	.0210	......	......	.0142	.0146	.0003	2.10
17	Monongahela Co., W. Va., Little Pittsburg Vein	.0059	0185	.0187	.0190	.0191	.0191	.0191	......	......	.0126	.0130	.0008	1.41
	ILLINOIS AND INDIANA.													
18	Chicago, Ill., Edison Coal. 10/8/'92	.0058	.0203	.0210	.0214	.0215	.0215	.0217	.02185	.02186	.0145	.0157	.0013	8.96
19	Illinois, Tohica	.0055	.0204	.0211	.0218	.0220	.0222	.0225	......	......	.0149	.0168	.0021	14.1
20	Centralia, Illinois Coal	.0059	.0201	.0208	.0214	.0215	.0215	.0217	.0219	.0219	.0142	.0156	.0015	10.6
21	Indiana, New Pittsburg	.0058	.0209	.0215	.0217	.0217	.0218	.0218	......	......	.0151	.0158	.0007	4.65
22	Illinois, Du Quoin Coal	.0058	.0215	.0222	.0229	.0231	.0232	0233	.0234	.0234	.0157	.0173	0016	10.2

Loss by weight of each tray in drying = .0002.

DISCUSSION.

Mr. R. S. Hale.—Professor Carpenter's paper is exceedingly interesting and valuable, but I fail to find in it the data to make clear one or two points, and I disagree partially with the statement on the bottom of page 940 as to a safe method to be used in testing coals for moisture.

In regard to the absorptive capacity of coals of different sizes, I have found when drying two samples of coal, the one of lump size and the other of fine coal, that at first the fine coal lost by far the most weight, but that toward the end of the experiment it was the lump coal which showed the greatest differences on successive readings. The indication was that if the experiment had been continued long enough both the lump and the fine coal would have given the same results. Now, in the experiments in the paper it is shown on page 942 that it took one week for some samples of fine coal to reach a constant condition. The lump samples on page 941 were, some of them, eight or ten times as thick as the samples of fine coal, and might, therefore, be expected to take a proportionate time before reaching a constant condition. The experiment on page 941 was, however, apparently continued only five weeks, and no data are given to show that the lump coals might not have gone on increasing in weight for some time, nor are there any data to show that before beginning the experiment they had been brought to the same condition as the samples of fine coal. In regard to the latter point, as to whether the samples were in the same condition when beginning the experiment, it is implied that the coals were dried for one hour at 220 to 240 degrees Fahr., and this brings me to the point on which I take issue with Professor Carpenter. On the bottom of page 940 he states that it is entirely safe to use this method of drying coal in testing boilers, saying that he finds no loss of volatile matter after drying for three hours. The chief difficulty with this or any method of drying yet proposed is not that volatile matter is given off, but that oxygen is absorbed while drying. Fischer (*Chem. Tech. v. d. Brennstoffe*, p. 108) gives the following experiment: Coal was dried for three hours in two litres of air which had previously been freed from all moisture and carbonic acid. The temperature was 110 to 100 degrees C. After the drying, the air was found to contain 1.844 per cent. of water and 0.196 per cent. of carbonic acid, carbon, and hydrogen, making 2.04 per cent. in all. But the loss of weight of the coal was only 1.778 per cent., showing that the coal had been absorbing oxygen. The same action has been noticed by many experimenters. In my own practice I once dried a sample of coal until it showed a negative amount of moisture. Prof. V. B. Lewes speaks of an increase of weight of 2 per cent. when heated to 250 degrees Fahr. after previous drying, an amount which would not be negligible in a boiler test. If Professor Carpenter has in use any method which gets rid of this difficulty, it is to be hoped that he will give the details to the Society. The absorption of oxygen by the coal is now known to be the cause of spontaneous combustion, and any method of preventing such absorption will be of great importance to others besides those of us who test boilers.

Mr. Wm. Kent.—I think this paper of Professor Carpenter's results, in some degree, from a correspondence which I had with him during the past year on the subject or drying and analyzing coal. In connection with a series of boiler tests which I made last year, I sent samples of twenty different coals to Professor Carpenter to have him make calorimeter tests and proximate analyses, and called his attention to the necessity of thoroughly drying the coal; and I communicated to him my method of drying coal, which Professor Carpenter has since confirmed—that is, that the coal must be heated to over 240 degrees—say, from 240 to 300 degrees. I informed him at the time that I had found that there is no loss whatever of volatile matter at that temperature. The first public announcement which I made of that fact was in revising my closing discussion of the paper read at the St. Louis meeting (*Transactions*, vol. xvii., p. 671), answering a criticism made concerning drying coal at too high temperature. In that discussion I stated that I found no loss in volatile matter at a temperature below 300 degrees, and Professor Carpenter now confirms that statement. Mr. Hale takes issue with Professor Carpenter, but offers no data to substantiate his position. It is often said by writers on this subject that volatile matter is lost in drying coal even as low as 212 degrees. I have not, however, been able to find any reference showing any proof of that statement, and my own results with twenty different kinds of coal, running from Pittsburg out to Illinois, have never shown any reduction of weight after heating even to 350 degrees, but in all cases, after reaching a minimum weight, a slight increase in weight took place, probably due to oxidation. The method which I finally used to determine the moisture in these coals may be described briefly as follows: Having obtained an average sample of the coal used in the boiler tests, using especial precautions to prevent its being air-dried during the process of sampling, it is run through a coffee mill adjusted so as to make rather coarse grains; 40 grammes are then dried in a sand bath at from 240 to 280 degrees, until it has reached a minimum weight (as determined by repeated weighings after heating an hour or more between each weighing) and begins to show an increase in weight. The weighings were made on a torsion balance prescription scale, to one centigramme, or one part in 4,000.

So far as I have gone, this is the best way I know of to determine the moisture in coal; but the moisture thus determined will not be quite high enough—that is, there may be an error of one-quarter of a per cent. due to oxidation of the coal. Now, in regard to the proofs of this method of testing. The duplication of results was extraordinary, frequently coming to one or two tenths of one per cent., and after reaching the minimum the increase by oxidation would be an extremely small fraction, usually not over 0.1 per cent. The question now is, Did we lose volatile matter or not? One test was made by putting the coal into a closed retort, heating it, and passing the gaseous products, if any, into a jar inverted in water. On heating to 350 degrees no gases were found. Another was to take a piece of lump coal, which to all appearance was dry, from under a shed, where it had been for a long time, and treat it by this rapid method of heating to from 240 to 280 degrees; and take a duplicate piece and put it in a desiccator over concentrated sulphuric acid, and let it remain two months. Two pieces of Illinois coal thus treated lost 14 per cent. of moisture in two months by each of the two methods of drying. Then, again, taking that dried coal which was dried by heating to 240 or 280, and exposing that, where it would not be touched, to the ordinary air for two months, and it absorbed back the whole 14 per cent. So the results were checked in several different ways. There can be, no doubt, other methods devised by chemists to determine it with still greater accuracy, by taking the retort of coal and filling it full of nitrogen gas to avoid oxidation, heating it, absorbing the moisture driven off in chloride of calcium, and determining the moisture by the increase in weight of the chloride of calcium as well as by the decrease in weight of the coal.

Mr. Gus. C. Henning.—The experiments in the paper are based on a fundamental method, which is criticised in the paper itself. At the bottom of page 939 it says: "The effect of the size of particles is quite decided. The larger the particle the less the weight of moisture which is absorbed. This indicates that the absorptive power is in part due to capillary action of the surface." In spite of this fact, Professor Carpenter has made no attempt to get a uniform size. He says in the case of fine powdered coal he passed it all through a No. 80 sieve. Now, passing it through an 80 sieve means that it has all the degrees of fineness of powder which has passed through that sieve. What he should have done is to pass all of the powdered material through a No. 80 sieve, and then take out all the very fine material by using a finer sieve; then a material which is nearly uniform would be obtained. And he must determine beforehand how much finer the second sieve must be in order to get an appropriate sieve for the purpose of his work, because the amount of material that is used and the moisture contained therein are very minute indeed. Then we come to the next paragraph, where he describes the use of larger shapes—one inch, half inch, quarter inch, and powdered so as to pass through sieves of 60 to the inch. Here again is the same error. It is pointed out that there are errors due to irregular sizes, and I again ask why does he not separate the pieces and get one uniform grade? Then he says the shapes were irregular. I should say it is not very difficult to obtain pieces of anthracite and of soft coal of various kinds which are sized very closely, even if it takes a stone or a file or something else to get them to size. There is one thing which I think is rather striking, and that is the small amount of absorption in coking coal, while in the anthracite coal it is very much more. There is a great variation in the Eastern coking coal in the figures given. It will be seen that it varies from nearly 7 up to 13.16, while in the anthracite coal the variation is very small—from 4.66 to 6.37. That shows that in the case of anthracite the results were tolerably good, but in the case of Eastern coking coals he found such a great variety that he is not justified in drawing the conclusion that the average is 1.92. He cannot grade the two materials together. In the case of the Illinois coal he has taken coal that has a moisture of 4.65 up to 14.10. Those cannot be averaged. There should be two averages, which is in one case 12½ per cent. and in the other case not over 6 per cent., while his average is 9.77. These should be separated into different kinds of coal, and then the average will appear very much better; and I think when that is taken into account and when this difference in size is eliminated his results will be much more uniform than they are given in the paper.

Mr. Kent.—I did not say anything in my remarks about the sizes mentioned in Professor Carpenter's paper. I simply wish to add that I found the same amount of moisture in a sample of lump coal one or two inches in diameter which I found in a duplicate sample that was crushed in a coffee mill, providing the drying was continued long enough. It took longer to dry the lump coal. Now, the capillary attraction on the surface does account largely for the moisture in the fine coal, and it seems that in the Western coking coals the moisture is of the same character as the moisture in wood; and I will ask to add to my discussion a quotation from Professor Johnston's recent work, showing just what happens when you dry a piece of wood. You never, at any ordinary temperature, can get a piece of pine wood dry. If you keep the heat on you will finally destroy the wood. If you get it what they call kiln-dry and then expose it to ordinary atmosphere, it will continue absorbing moisture until it has the normal amount of moisture. So, with the Illinois coals they act the same way: if you dry them and then expose them to the ordinary air, they will get all the moisture back again and hold it by capillary attraction in the minute particles inside the coal.

*Prof. R. C. Carpenter.**—There seems little to be stated in respect to the discussion, except to clear away some misapprehensions which are evidently the results of a misunderstanding of the case.

In respect to Mr. Hale's remarks, I would say, first, that there is no statement on page 941 that it took four weeks for the coal to attain its driest condition, nor was any such an impression intended to be conveyed. The entire experiment, which included many repeated dryings and moistenings, occupied the time of four weeks. The actual time required to dry a sample, instead of being four weeks, was less than one hour, in view of which Mr. Hale's inference and argument seem entirely gratuitous. It is doubtless true that a large piece of lump coal would dry more slowly than fine coal, but that question has not been under consideration in the paper. I do not, however, enter upon the question whether or not it would contain more moisture. In regard

---

* **Author's closure, under the Rules.**

to the gain or loss of weight, I would say that we have carried on some very extensive experiments in relation to the amount of moisture which is absorbed, driven off, and reabsorbed, using for this purpose samples of coal from fifteen mines in this country which were widely separated. The publication of this investigation will be given in full at a later time, but the investigation seems to show—First: That with the most volatile coals there is no sensible loss of weight due to the driving off of volatile matter under a temperature of 380 degrees Fahr., and with anthracite coals there is no sensible loss under a temperature of 700 degrees Fahr. Second: Regarding the gain in weight which we found to commence under certain conditions after the coal was exposed to the atmosphere, and which Mr. Hale attributes to the absorption of oxygen, we found that if the coal was weighed in the presence of sulphuric acid, or before it had any chance to absorb moisture from the air, no gain was experienced in any case. We, furthermore, found that coal would absorb a certain amount of moisture from the air almost instantly, and in a saturated atmosphere it would return to its original weight in the course of fifty to eighty minutes. This investigation leads me to believe that the gain in weight to which Mr. Hale refers is due, not to absorption of oxygen from the atmosphere, but to the absorption of moisture; and I feel very certain that if Mr. Hale will prevent his coal from absorbing moisture, he will find no gain in weight under any conditions whatever.

I am more than ever convinced from this latter investigation that it is perfectly safe and proper to dry coals at a temperature of 350 degrees, and believe there will be neither further decrease or increase, provided the coals can be weighed entirely free from the chance of absorbing moisture.

Mr. Kent's experience, which is backed up by a very extensive investigation, is entirely in harmony with my own, and I believe it absolutely correct.

Mr. Henning's discussion with relation to the size of pieces is, it seems to me, of little weight, and if of any importance whatever, the matter is entirely answered by referring to the diagram on page 940; there it will be noticed that the effect of size is not of the importance that Mr. Henning would have us believe —in fact, I may say that, if the experiment had been extended over a sufficiently long time, *it would absolutely be without influence.* The only effect that size of particle has upon the result

is to vary the time which is required for the absorption of a given amount of moisture, and had the experiments continued over a longer time, it would have been absolutely without effect. The paper shows a remarkable difference in the absorptive power of different coals; but, on the other hand, it shows a remarkable uniformity in coals from certain districts and a lack of uniformity in coals from other districts. It is not, however, to be presumed that the averages, for instance, in the coal districts of Illinois and Indiana, when there is a great variation, are of any great value in indicating the amount of moisture from any mine.

The writer has reason to believe that the cause which lead to the investigation described in the paper was not understood by Mr. Henning; otherwise the point which he has made regarding the size of coal would not have seemed so important. The following explanation may throw some light on this point, and had it been stated in the paper, I feel that such a misunderstanding would not have arisen.

In reviewing the work connected with certain boiler tests, it was noted that in some instances the correction for moisture in the coal was only 3 or 4 per cent., while in others it was as high as 15 per cent. This latter number was so very great that the writer was inclined to doubt the accuracy of the results of the boiler tests in question. The investigation was undertaken to find out the capacity of different coals under the same condition to absorb and retain moisture, and quite naturally the coals were reduced to the same physical condition and to a condition in which they would absorb quickly the maximum amount of water. The investigation was simply a comparative one, the important step that all the coals be in the same physical condition being fully complied with. The effect of slight variation in sizes was determined by later investigation fully described in the paper.

DCCXLII.*

THE LAWS OF CYLINDER CONDENSATION.

BY ARTHUR L. RICE, BROOKLYN, N. Y.
(Junior Member of the Society.)

THE losses in the steam engine, aside from the thermodynamic loss which is due to the method of transformation and cannot be avoided so long as the present method is used, are those of clearance, radiation, initial condensation, and friction. The greatest cause of loss is condensation, as will be seen by reference to Fig. 302, where the relation of steam consumption and ratio of expansion is shown for 120 pounds absolute. Curve *A* is for the ideal engine of Rankine, with non-conducting cylinder, no condensation and no clearance; *B* for the same engine, with the loss due to 7.6 per cent. clearance added; *C* for the same engine, with conducting cylinder and condensation loss; *D* for the brake power of the engine; *i.e.*, with friction loss. The vertical distance along an ordinate between *A* and *B* measures the increase in steam consumption due to clearance, between *B* and *C* that due to condensation, between *C* and *D* that due to friction. *A'*, *B'*, *C'*, and *D'* are corresponding efficiency curves, and vertical distances between them measure corresponding losses of efficiency. The radiation loss was too small a variation to be shown on the diagram.

The importance of the condensation loss is also shown in the business world by the great expense incurred for jacketing and compounding engines in order to reduce it somewhat, and by the saving effected by engines with these preventive features over those without them. By the means mentioned, the condensation has been reduced greatly and much higher pressures can be used, with a proportional degree of expansion and corresponding economy; but if pressures are to go on rising, it is impor-

---

* Presented at the Hartford meeting (May, 1897) of the American Society of Mechanical Engineers, and forming part of Volume XVIII. of the *Transactions*.

tant to reduce the loss still further, and in order to do this we must get at, so far as possible, the laws governing condensation. For engineering purposes the condensation per horse-power hour, or expressed as a per cent. of total steam used, would seem most convenient, and these two quantities were investigated. The latter was found to be the one for which most satisfactory results could be obtained, and has been retained in the discussion.

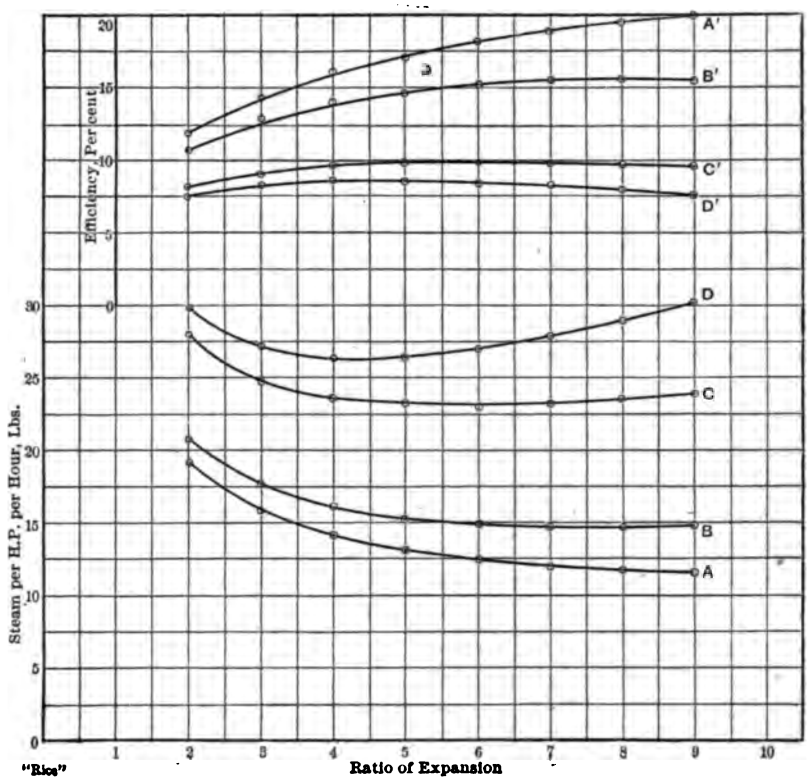

FIG. 302.

THE ACTION OF CONDENSATION.

For the sake of a better understanding of the phenomenon of condensation it is worth while to see what are the causes leading to it. Consider first the action of the Rankine ideal engine. This has a non-conducting cylinder, admits steam with immediate rise in pressure, maintains the pressure constant to cut-off, expands adiabatically, releases with immediate drop to back pressure, and exhausts at constant pressure. The cylinder will not absorb heat. There is no clearance and no chance for heat loss except that due to the nature of the cycle. During admission the work is due to the generation of new steam in the boiler, that in the cylinder acting simply as a medium for the transmission of force; after cut-off, the steam works expansively, transforming some of its internal energy into work, and, as a consequence, some of the steam must condense in order to furnish the heat so transformed. The condensation goes on throughout the mass of the steam, and the water particles thus formed are held in suspension in the form of a mist. The amount of this condensation is proportional to the amount of expansion, and is but a small percentage of the total steam except for very high ratios of expansion. The condensed steam which may cling to the sides and heads of the cylinder and to the piston will remain in the cylinder except as swept out by the piston on the exhaust stroke. That which remains in suspension in the mass of the steam will be carried out at the exhaust with the steam. The water which remains clinging to the walls of the clearance space will fall, during exhaust, to the temperature corresponding to exhaust pressure. On admission this water will take up heat from the incoming steam until it rises to the temperature of that steam, and to furnish the heat needed some of the fresh steam will be condensed. The condensation will be due to contact with the cooler water and will be local at the points on surfaces where such water exists. The water formed by this action will be added to that already existing, thus increasing the size of the drops or the thickness of the film on the clearance surfaces. During admission no further condensation will occur, but during expansion there will be the same condensing action as on the previous stroke throughout the mass of the steam; there will be the same tendency for some of the water thus formed to cling to the walls as on the first stroke, and some of it will unite with the film already on the clearance surfaces to increase its thickness. To evaporate at exhaust pressure the water so added would require the expenditure by the water film of the latent heat of vaporization at that pressure for such amount of water as is evaporated. There is available only the heat due to the fall of the water film from the temperature of admission to that of exhaust. This is obviously not sufficient to evaporate both the addition from condensation during admission and that from expansion, so that the clearance surfaces arrive at admission with a little more water upon them than at the end of the first exhaust stroke. The same thing will occur in succeeding strokes, the film of water growing a little thicker during each cycle until the limit is reached when more water refuses to adhere to the clearance surfaces. Thus we see that to have initial condensation we do not need a conducting cylinder, only adiabatic expansion. In regard to this Isherwood says that the "initial cause of condensation is the dew deposited from external radiation and adiabatic expansion." *

The larger the expansion the sooner will the condensation come to its limit, but it will reach it sooner or later. If there be no expansion there will be no condensation.

Let us now consider what will be the course of events if the cylinder be capable of absorbing and giving up heat. Let the cylinder be as warm as the entering steam and the walls free from moisture. During admission for the first stroke we shall have the same action as in a non-condensing cylinder; during expansion there will be condensation, as before, and the same tendency for some of the moisture to cling to the walls; but the walls were hot to start with, and, as the water touches them—it being cooler than they—heat will flow into it and some of it be reëvaporated. Thus the walls will be kept dry until exhaust. During exhaust some heat will flow into the cold steam from the cylinder, but the amount will be small on account of the poor conductivity of the layer of dry steam next the cylinder walls. At admission there will be no layer of water to be heated by the incoming steam; but the walls themselves have given up some of their heat, and hence their temperature has fallen below that of the admission steam, and heat will be required to restore them to their original condition. This will call for the condensation of steam to furnish the heat, and the water from this local condensation will be deposited on the surfaces to which the heat is surrendered. This will continue, on the fresh surface exposed to the steam by the moving piston, up to the point of cut-off. During expansion the walls and their water

---

* *Engineering Researches*, vol. i., p. 180.

film will give up heat to the water of expansion which comes in contact with them, the amount of the action depending on the ratio of expansion; at release the temperature of the steam will fall to that due to the back pressure, the film of water will give up heat to the steam, or will itself partly evaporate until the remainder reaches the temperature of exhaust; then heat will flow from the hotter cylinder walls to evaporate that remaining. The walls will thus be deprived of more heat than on the previous stroke, for there will be abstracted, by the film condensed during admission, nearly as much as it gave, and, in addition, that needed to evaporate the water particles due to expansion which touch the wall. Thus at admission the walls will be dry, but at a lower temperature than at the end of the former exhaust stroke. During the third admission more steam will be condensed to heat the cylinder than during the second; during the third expansion and exhaust more heat will be given up by the walls than during the second, so that at the end of the third exhaust stroke the cylinder will be cooler than at the end of the second. The action will thus be cumulative, the limit being set either by the water which can adhere to the cylinder or by the capacity of the walls for absorbing and rejecting heat. During exhaust, after the adherent water has all been evaporated there will be almost no heat given up by the cylinder on account of the poor conducting power of the dry steam, but during admission, expansion, and the early part of exhaust the heat interchange will be much greater between the walls and the steam than between the water film and the steam in a non-conducting cylinder. If there be no expansion, there will be some condensation due to the rise and fall of temperature of the cylinder walls, but the action will be slight. Isherwood says: "On the whole, there is probably but a trifling difference in the loss by the lowering of the temperature of the cylinder metal by the superheating of the steam or vapor within, whether the steam be used with or without expansion."*

We have seen how condensation acts by absorption and rejection of heat; also that it is due, for the most part, to the condensation of steam during adiabatic expansion, but to some extent to the rise and fall in temperature of the absorbent cylinder walls. To avoid it utterly, all condensation during expan-

---

**Engineering Researches*, vol. i., p. 126.

sion must be avoided, or we must have a cylinder surface which is non-absorbent of heat and to which water cannot adhere.

In the actual engine, probably, the loss is produced partly by the metal, partly by the water, and the part which each takes in the action is continually varying.

If there were no lag of the temperature of the walls behind that of the steam, the metal would go through the full temperature range due to the change in pressure from admission to exhaust at each stroke. Fortunately there is lag. The condensed steam is all evaporated soon after release, and before the walls, except at the very inner surface, have reached the temperature of exhaust. After that the rejection of heat to the dry steam is slow, and the walls may not be much below the temperature at release when the entering steam of a new cycle strikes them. At admission, however, steam condenses on the surfaces, giving a good conducting film of wet steam, and heat will flow into the walls until they have attained the maximum temperature of the steam. Thus the walls may be hotter, but never much colder, than the steam in the cylinder. If we can keep the walls dry, or a layer of dry or superheated steam next them, it will reduce the action, for the walls will give up less heat during expansion and exhaust, and consequently take up less during admission. Also the less the rate of expansion in a cylinder the less will be the condensation due to expansion, and the less will be the heat taken from the walls by the steam next them during exhaust. On these facts the expedients depend for their success which have been employed to reduce the evil.

FACTORS THAT CONTROL CONDENSATION.

Having seen how important a source of loss condensation is, and how the action proceeds during a cycle, we next wish to know which factors determine the amount of condensation in any given case, which are most important, and how they may be so controlled as to make the loss a minimum. In order to get at these facts it will be best to consider first the laws of transmission of heat. We may confine ourselves to metals and for the most part to iron, for with this material only do we have to deal in the real engine cylinder. Evidently the best metal is that which has most resistance to the flow of heat into it, both at the surface and through the interior. Isherwood found that the conductivity of metals is as follows, his method of determination being to fill metal pots with water at 212 degrees Fahr., surround them with steam, and measure the evaporation in a given time:*

Copper	1.000	Wrought Iron	0.581
Brass (60 Cu, 40 Zn)	0.866	Cast Iron	0.491

He found also that between $\frac{1}{8}$ and $\frac{3}{8}$ inch the amount of heat transmitted was independent of thickness and proportional to the temperature difference between inside and outside surfaces. This would seem to show that the resistance to flow of heat is almost entirely at the surface of the metal; hence that the character of the surface is more important than that of the interior, an importance increased by the fact that as there is internal resistance to the flow of heat to and from the metal, the portions near the surface will be more active in heat interchange than those deeper in the metal; hence they will have a greater temperature range. From the table, cast iron is the best of the available metals so far as conductivity is concerned, and it is the one most used for cylinders.

The heat capacity, or specific heat, must have an influence as determining how much heat will be absorbed by the layer of metal in action while going through a given range of temperature. If an entirely non-absorbent and non-conducting substance could be used, evidently there would be nothing but the water in the cylinder to produce condensation, and the action would be much reduced. The relation of specific heats is as shown by the following values from Kent's *Mechanical Engineer's Pocket-Book*, p. 457:

Brass	0.0939	Wrought Iron	0.1138
Copper	0.0951	Cast Iron	0.1298

Cast iron will absorb more heat than any other of the common metals which are available. It would seem from this that a brass cylinder might be a good device, but durability and cost must be considered as well as heat capacity, and, with any metal, there is still the water film to contend with. Experiment has shown that the conducting power of a solid cylinder of bronze more than balances the apparent benefit of small absorption.†

---

* Shock, *Steam Boilers*, p. 58.

† Donkin, *Proceedings* Inst. Civil Eng., vol. cxv., p. 263.

Experiments have been tried with various surface linings, but none have proven of sufficient value to come into general use. In respect to the effect of the condition of the surface there has been some experimentation. Mr. D. Croll found that a cast-steel cup having part of the surface rough and part turned and polished, when filled with hot water would evaporate a film of water formed on the outside by the condensation of steam in 48 seconds from the rough part and in 78 seconds from the smooth. This would indicate a much more active heat interchange between the steam and rough surface than between the steam and the smooth surface. This inference is apparently supported by the action of two engines built, the one with rough piston and cylinder ends, the other with the surfaces finished; the former seemed to work with a great deal of water in the cylinder, the latter quite dry, but no positive experiments have yet been reported.* Doctor Thurston has invented a method of treatment for iron surfaces by pickling in acid to render the iron somewhat porous, then coating with a varnish of drying oil. He has succeeded in reducing the condensation 40 to 60 per cent. by this method.† This being so, it is probable that the film of oil which would collect on the clearance surfaces when running will tend to reduce the action of the metal. The oil will also be beneficial in tending to prevent water from adhering to the walls. Hence the attempts now being made to substitute graphite for oil in cylinder lubrication may prove injurious to economy from the effect on condensation.

Speed.—Initial condensation must evidently be, in some way, proportional to the time for either absorption or rejection of heat by the metal. It is more convenient to consider the speed of revolution than the time of contact of the steam and the cylinder wall in the case of the engine, but as such time is inversely proportional to the speed, this involves no difficulty, the speed factor being simply placed in the denominator. Whether the time of contact considered should be that with the admission steam or that with the exhaust, is a matter admitting of some debate; the speed will be proportional to either, so that it will make no difference in the relative values of the condensation at different speeds, but it will make a decided difference in the formula for condensation at any given speed. We have

---

* *Transactions* Institute Naval Architects of Great Britain, 1894.

† *Transactions* A. S. C. E., 1890.

seen that initial condensation is produced by previous evaporation of adiabatic condensation. On this basis it would seem that the time of evaporation—*i.e.*, time of contact with the exhaust steam—will govern the amount of heat which can be exchanged between the two substances. This time is generally longer than the time of contact with the live steam, too, if the whole period of exhaust is considered; but in many cases the water film is all evaporated from the wall early in the return stroke, and from that time on the action will be almost nothing. In the case of the admission the action will continue up to cut-off, for fresh surface will be coming into contact with the live steam all the time, and the walls are covered with moist steam, which is a good conductor of heat. The rates of absorption and rejection are probably about equal so long as moist steam is in contact with the wall; so that the times of action of the heat interchange during exhaust and admission are, perhaps, not greatly different. As a matter of scientific interest, the true limit may be worthy of determination, but the relation of condensation to speed in revolutions per minute is the point which is of interest to the engineer and, as has been mentioned, this relation will be the same whether the time for exhaust evaporation or admission condensation is the one that limits the action.

Dr. Thurston, in 1881,* first suggested that the condensation varied in proportion to the square root of the speed, a result derived independently in 1882 by Escher.† All experiments seem to agree fairly well with this law. Other suggestions have been those of Prof. W. D. Marks (1886), who, considering the tests of Messrs. Gately and Kletzsch, found the function to be the inverse first power; ‡ Mr. Bodmer (1889) who found from the tests of Mr. Willans and Mr. English that the variation was inversely as the two-thirds power of the speed; and Mr. Barraclough (1894), who considered the one-third power as the correct factor. For investigation on this point, tests made by Major English in 1887, those by Professors Denton and Jacobus in 1889, those by Mr. P. W. Willans in 1893, and a series made by Messrs. Marks and Barraclough in 1894 were considered. These seemed the only ones on record which were sufficiently complete and reliable for the purpose. The tests of Major

---

* *Journal of the Franklin Institute.*

† *Zeitschrift des Vereines Deutscher Ingeneure.*

‡ *Journal of the Franklin Institute.*

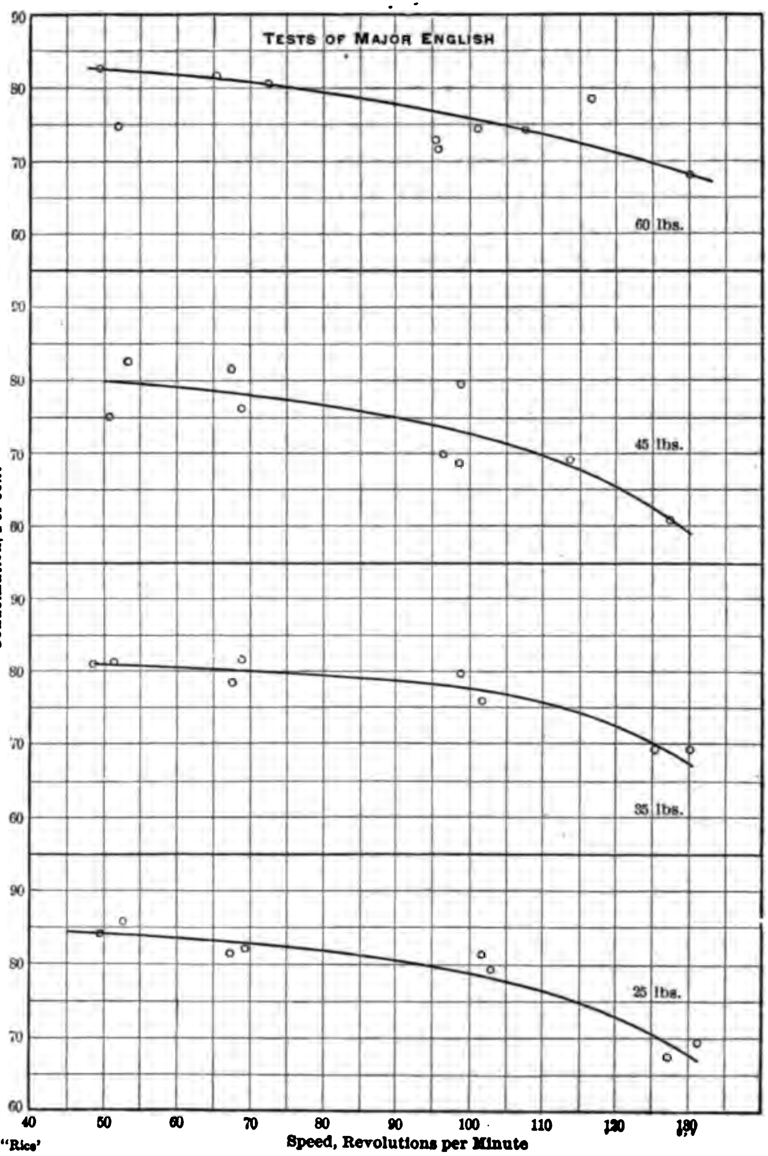

FIG. 303.

English * were made to determine the condensation on the clearance surfaces of a slide-valve engine with cylinder 10 inches in diameter by 14 inches stroke. The connecting rod was discon-

---

* *Proceedings* Inst. Mech. Eng'rs, 1887.

nected and the piston blocked at the head end of the cylinder, the crank end of the cylinder and the port being filled with wood and iron, and the port closed with a brass plate scraped flush with the valve seat. The shaft and eccentric were run by another engine, the cut-off corresponding to 0.7 stroke. Experiments were made at 60, 45, 35, and 25 pounds absolute pressure, and at 130, 100, 70, and 50 revolutions per minute. The conditions were not the same as in the working engine, and would give the effect due to the iron alone, not that due to the expansion; but in the slide-valve engine the expansion is generally small, anyway, so that the results may not be far different from those in the actual case. The percentage of condensation is reckoned on the total amount as weighed from the condenser. This includes the steam condensed and that to fill the clearance only, so that the percentage has an abnormally high value, and only the *rate of variation* with speed can be compared with the other tests. It is interesting to note how large a portion of the steam entering the clearance space is wasted by condensation.

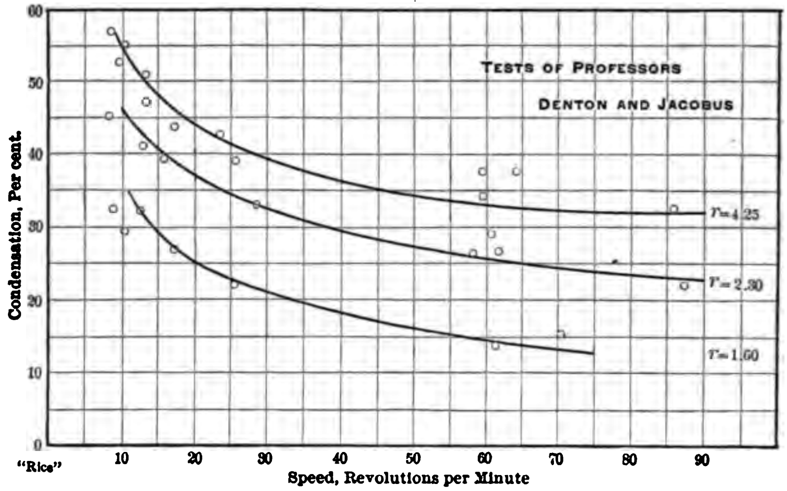

FIG. 304.

Fig. 303 shows the relation of condensation as a percentage of total steam to speed. There is, in all the curves, an increasing rate of decrease, with increase of speed due doubtless to the less amount of iron that has time to become active at the higher speeds. The curves are all of the same general form, but vary considerably in position and inclination. As will be seen, they do not agree in general form with the curves from the other tests considered, probably because only the clearance was filled with steam and there was no expansion.

The tests of Professors Denton and Jacobus * were made on a 17 by 30 engine, with valve of the Meyer cut-off type. The engine

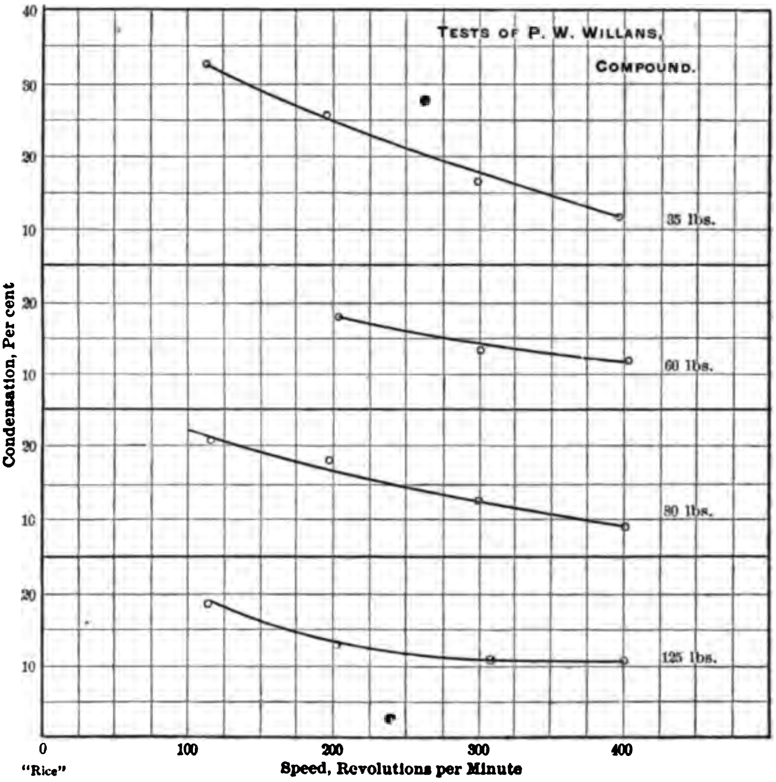

FIG. 305.

was direct connected to an air compressor, could cut-off from 0.04 to 0.9 stroke, and could be governed at from 9 to 90 revolutions per minute. Tests were made at 90, 60, and 30 pounds gauge pressure, at 4.4, 6.9, 12.6, 18.2, 31.3, 59.9, and 87.5 per cent. cut-offs and at various speeds. The conditions were not kept as constant nor varied by as regular a system as is desirable in such experimentation, but otherwise the tests were carefully made.

---

* *Proceedings* A. S. M. E., vol. x., p. 722.

Those at 90 pounds are the most regular and numerous, and they alone will be considered. Fig. 304 shows the variation of condensation with speed for this set of tests. The action of expansion and the resulting water film seems to be to make the curves concave upwards instead of convex, but the condensation still decreases with increase of speed, though not by any simple proportion.

The tests of Mr. Willans* were made on a Willans central piston-valve engine having cylinders 6, 8.5, and 14 inches in diameter by 6 inches stroke. The engine was run with the two larger cylinders as a compound engine. The tests were carefully made and fully worked up, but are disappointing for the present purpose because of the unsystematic variation of conditions. Fig. 305 shows the relation between condensation and speed. The curves are separated for the sake of clearness. All have the same general form. Fig. 306 shows these curves brought together and given the same general trend. The form is the same as for the Denton and Jacobus tests. There is no certainty of their correctness; they simply show what may, from the other tests considered, be the approximate form and relation of such curves for this form of engine.

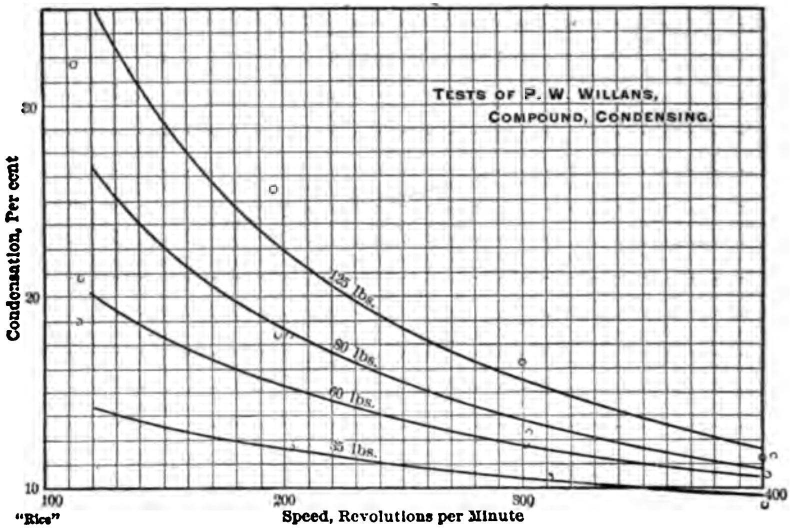

FIG. 306.

---

* *Proceedings* Inst. Civil Eng'rs, vol. cxiv., No. 2622.

The tests of Messrs. Marks and Barraclough * were made on the high-pressure cylinder of the Sibley College Allis-Corliss experimental engine in the spring of 1894. The engine is 9 by 36 inches, with jacketed sides and ends; the jackets were not, however, used in these tests. The engine was run condensing at speeds of 85, 70, 55, 40, and 25 revolutions per minute, pressures of 120, 100, 80, and 60 pounds absolute, and with a ratio of expansion of about 2.7.

Fig. 307 shows the relation of condensation to speed for these tests. The curves are of the same general form as for the other tests and are remarkably regular and well defined. The two sets of tests best planned and most reliable of the whole number give, for the percentage variation, similar forms of curves, and those of Willans may easily be of the same general character. The tests of English were not under working conditions, and their disagreement with these results would therefore be no argument against the correctness of this form of curve. The curves are of the form whose equation is $yx^b = a$, or, transforming, $y = ax^{-b}$, where y = condensation and x = speed. The curves for the tests of Denton and Jacobus give the following constants:

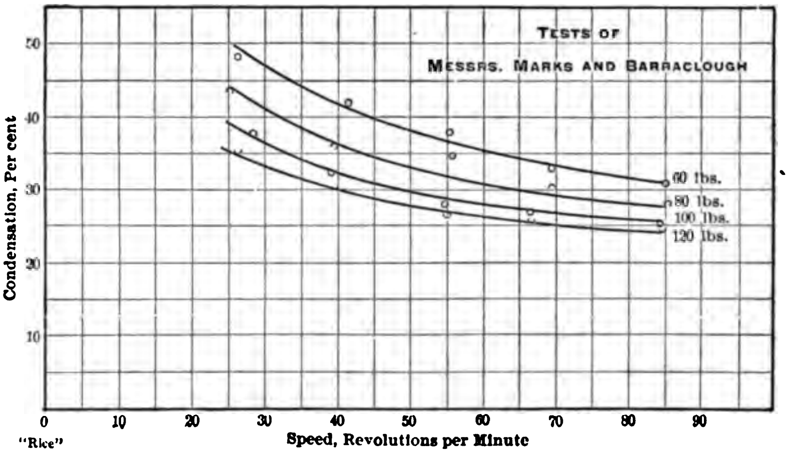

FIG. 307.

Ratio of Expansion.	a	b
1.60	113.1	0.498
2.80	97.5	0.321
4.25	98.9	0.266

---

* *Proceedings* A. S. M. E., vol. xvi., p. 988.

The curves for Fig. 306 for Willans' tests were sketched roughly, the constants found, and the curves then plotted. The constants are:

Pressure.	*a*	*b*
125 pounds.	73.2	0.339
80 pounds.	266.0	0.541
60 pounds.	863.0	0.728
35 pounds.	2,620.0	0.901

For the tests of Marks and Barraclough the following values were found:

Pressure.	*a*	*b*
120 pounds.	96.8	0.316
100 pounds.	122.1	0.361
80 pounds.	158.6	0.402
60 pounds.	190.8	0.414

For Denton and Jacobus' tests the exponent varies from 0.5 at 1.6 expansions to 0.25 at 4.25 expansions; that is, with large expansion the variation in speed has less effect than with small. For the tests of Marks and Barraclough, the exponent increases as pressure falls, showing that speed has more influence on condensation at high pressures than at low. Fig. 308 shows the

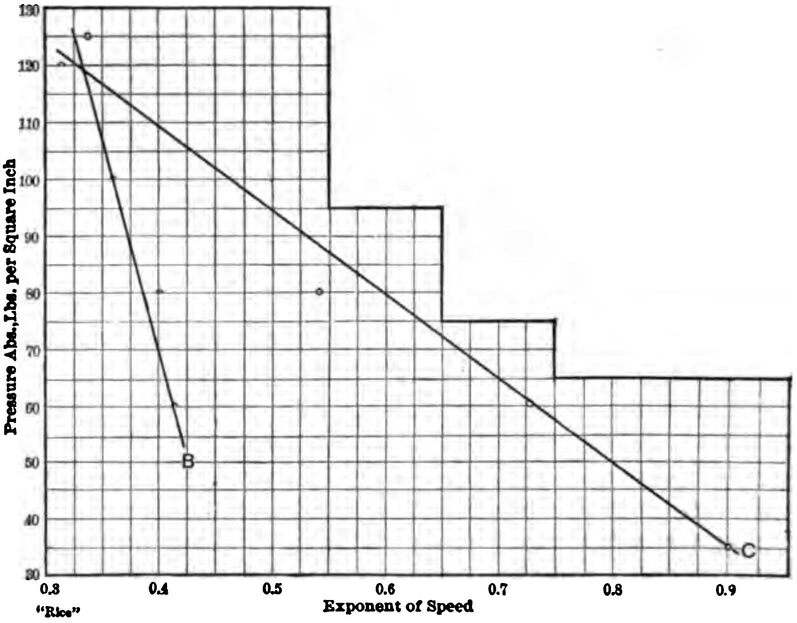

FIG. 308.

variation of the exponent with pressure, B being for the tests of Marks and Barraclough, and C for those of Willans. The equation of the line B for the Corliss engine is

$$\text{exponent} = 0.49 - 0.0013p,$$

were p is initial pressure in pounds absolute per square inch. Line C for the Willans engine gives the equation

$$\text{exponent} = 1.134 - 0.0067p.$$

At 120 pounds both styles of engine have the same value, 0.33, or the cube root, as the power of the speed to which the percentage of condensation is related.

Temperature Range and Pressure.—Since the temperature of steam depends upon the pressure, the temperature range between admission and exhaust steam will depend, for a constant back pressure, upon the pressure at admission; hence the effect of the two can hardly be separated in experimental work. Change in pressure may affect the condensation in three ways: by changing temperature range, density, and latent heat. The increase in temperature range will give more opportunity for the iron to act in giving up and taking in heat; increase in density will bring more particles of wet steam in contact with the cylinder walls in a given time, hence may also tend to increase the heat interchange; decrease in latent heat will necessitate a greater condensation to return to the cylinder and water film the heat needed to restore them to admission temperature. Whether the temperature range of the steam has any decided influence on the amount of condensation is a disputed point; and if it has such influence, whether the range considered should be that from admission to exhaust, from admission to release, or from compression to admission is unsettled. There are logical reasons for the consideration of each. Evidently the temperature range of the iron wall and water film is what determines the heat interchange, hence the amount of steam condensed at admission.

If the metal always follows quite closely the temperature of the steam, it must go nearly from admission to exhaust at each stroke. During compression the temperature of the walls would rise with that of the steam, but in order to give up heat enough to the walls to raise their temperature to any considerable degree some steam must be condensed, and the water thus formed, as well as the walls, will have to be warmed by the incoming steam from the temperature at the end of compression to its own. Besides this, all work expended in warming the clearance steam by compression must be transmitted twice through the train of mechanism connecting the piston to the fly-wheel, so that raising the temperature of the cylinder by this method would hardly be considered as likely to prove profitable, and has not proved to be so in experiments carried on at Sibley College to determine the most economical degree of compression. It was found that the smallest amount of compression consistent with smooth running was the most economical.* Nevertheless, the initial condensation may be proportional to the temperature range between the end of compression and admission.

Again, if the steam in the clearance at the beginning of compression is dry, the compression will superheat it. Little heat will then pass to the metal, on account of the poor conducting quality of the steam, and the entering steam must raise the walls from the temperature of exhaust to its own. But, owing to this poor conductivity of dry steam, the cylinder walls may never become as cool as the exhaust steam. The water collecting on them during expansion is probably evaporated soon after release and, during the rest of the exhaust period, little or no heat flows from the iron to the dry steam then in the cylinder. In this case the range of the walls would be from the temperature of admission steam to somewhat below that of release, but not to exhaust. This temperature range would be dependent on the ratio of expansion quite as much as on the admission pressure.

Much experimentation has been performed to endeavor to determine what the temperature range of the cylinder wall depends upon, and so far it has been determined that this range is greater at the ends than in the middle,† that the temperature cycle is dependent on the card, and that the variation extends to only a slight depth in the iron.‡ The writer made an attempt to determine by plotting condensation with each of the temperature ranges mentioned above, which of them seemed to show any regular curves or method of variation. The work took considerable time, but the results varied so much that they are not considered worth mentioning here except to state that it

---

* Barr, *Transactions* A. S. M. E., vol. xvi., p. 430.

† Donkin, *Proceedings* Inst. Civil Eng'rs, vol. c., p. 347.

‡ Thesis of W. W. Churchill, Sibley College Library.

appeared that condensation has no definite direct relation to either of the temperature ranges considered. The effect of temperature range would seem to be due to change in pressure or ratio of expansion, and therefore to be explained by a consideration of those quantities.

Besides changing temperature range, change of pressure will alter the density of steam at admission. This will alter the surface exposed per pound of steam. Also, the latent heat will become less as pressure rises and more pounds of steam must be condensed to give up a certain amount of heat per square foot. Taking up experimental data, tests will be considered where back pressure, rate of expansion, and speed have been kept constant and initial pressure varied. Tests which comply with these conditions are the series of Messrs. Marks and Barraclough, and a series made at Sibley College by Messrs. Thomas and Ross in 1895.* Fig. 309 shows the values for the tests of Marks and Barraclough, and Fig. 310 for those of Thomas and Ross. The curves for Fig. 309 are almost certainly straight lines, and the variation from straight lines for the tests of Fig. 310 may easily be due to slight variations in speed and ratio of expansion. The slope of the lines shows that the condensation decreases as pressure increases, due to the fact that at high pressures, with constant ratio of expansion, there will be a much greater weight of steam in the cylinder at cut-off, and the number of pounds of steam condensed will not be much greater because the latent heat decreases only slowly with rise of pressure.

For curves of condensation measured as a percentage of the total steam, the form of equation is $b = y - ax$. The determinable values a and b are:

	Ratio of Exp.	R. P. M.	a	b
		85	0.123	37.3
		70	0.188	41.1
Marks and Barraclough.	2.65	55	0.192	49.3
		40	0.198	53.3
		25	0.285	62.7
	6.0		0.204	65.6
	4.3		0.148	55.0
Thomas and Ross.	3.4	85	0.118	47.7
	2.4		0.073	31.6
	2.0		0.058	26.6

---

* Thesis of Thomas and Ross, Sibley College Library.

The coefficient and intercept increase with decrease of speed and with increase of expansion. From Figs. 309 and 310 it is evident that the effect of pressure is but slight, as the angle of the lines with the horizontal is small. It does not seem possible to assign values to the constants which shall be satisfactory for all speeds and ratios of expansion, so as to use a single equation for all. A graphical chart could easily be constructed which would answer the purpose of such an equation, and would be quite as accurate and convenient.

Ratio of Expansion.—If rise and fall in temperature of the cylinder walls is considered as the primary cause of initial condensation, there seems no logical reason why the ratio of expansion should have any influence on the amount of the action. The total temperature range inside the cylinder would be the same for constant initial and back pressures whether there be much or little expansion. The only way in which any effect could result from increase of expansion would be by the allowance of longer time for the more gradual cooling of the walls during the fall in temperature along the expansion curve. This would permit the temperature fluctuation to penetrate deeper into the metal, hence would increase the amount of heat interchange. But when the action of adiabatic condensation is considered, and also the poor conductivity of dry steam, other and most important effects are introduced. The amount of expansion governs the amount of the adiabatic condensation, and this, as we have seen, is directly instrumental in producing initial condensation. Also, after the moisture has been evaporated from the walls, the action and the fall in temperature of the iron will

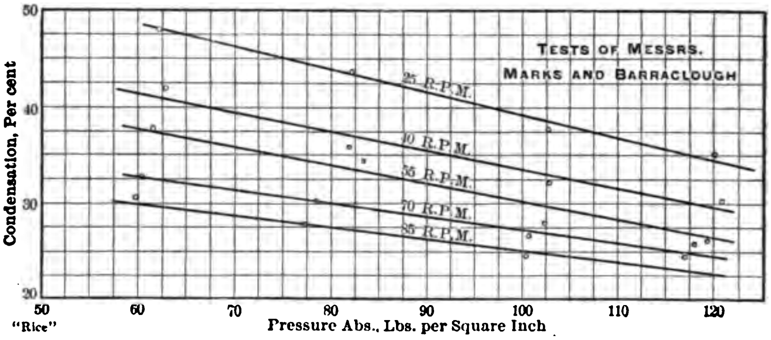

Fig. 309.

be but sluggish, and the temperature of the iron may not go much below that of the steam at release, except for the instantaneous drop of the extreme surface of the metal when the exhaust valve opens. As a matter of fact, experimental results indicate a very close relation between ratio of expansion and the amount of condensation in an engine. It has been suggested by Dr. R. H. Thurston that the function involved, when percentage of condensation is considered, is the square root of the ratio of expansion; and this is generally taken as the value. For investigating this factor the tests of Messrs. Thomas and Ross, mentioned previously, and a series made by Messrs. Jones and White * on the high and intermediate pressure cylinders of the Sibley College experimental engine, run compounded, will be considered. Figs. 311, 312, and 313 give the plotted curves, showing the relation of condensation to expansion. There is the same general form and a fair degree of regularity, except for the low-pressure cylinder, in the tests of Jones and White. For these, Fig. 313, the condensation decreases as the expansion increases, a seeming contradiction of the results in the other tests. If the tables be consulted it will be seen that the expansion increases in the low-pressure cylinder as it decreases in the high-pressure. The condensation in the high-pressure cylinder,

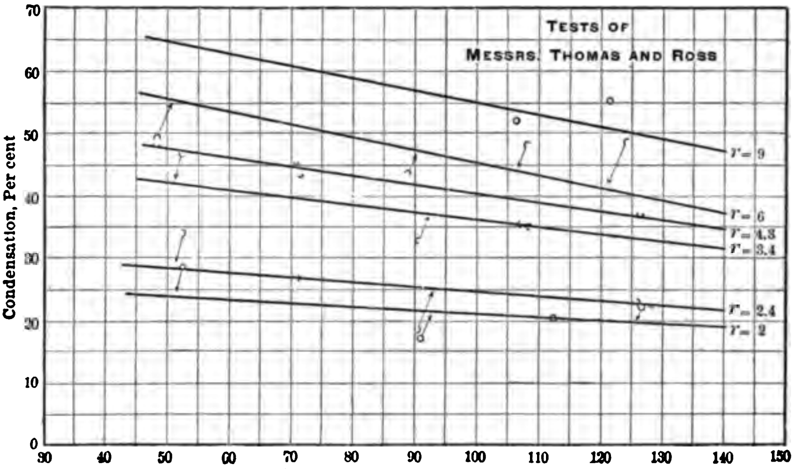

FIG. 310.

---

* Thesis of Jones and White, Sibley College Library.

due to adiabatic expansion, would be greater as the expansion was increased; hence wetter steam would be delivered to the low-pressure cylinder. This would show against the low-pressure cylinder, on the card, as initial condensation, and it would be impossible to divide the water between the two causes. Furthermore, the pressure at admission in the low-pressure cylinder decreased along with the decrease of expansion there; and it has been seen in the preceding section that condensation, measured as a percentage, increases with fall in initial pressure. Either change is much larger than the change in ratio of expansion, and their combined effect overbalances its action. The equation for the curves is $y = a\,(x - c)^b$, except for the low-pressure cylinder. The constants are given below:

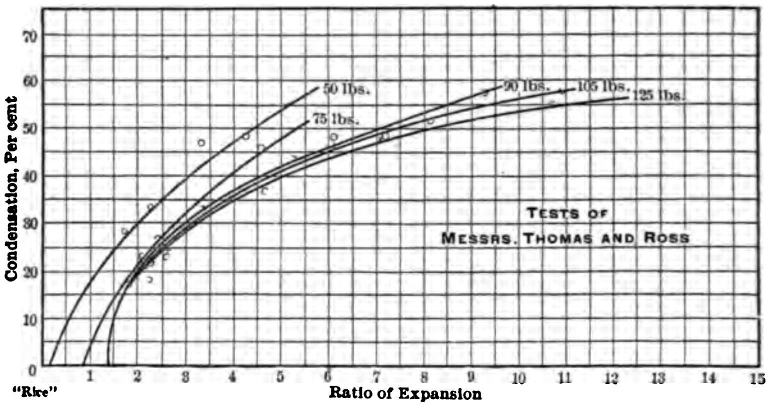

FIG. 311.

	Pressure.	a	b	c
Thomas and Ross.	50	21.1	0.597	0.2
	70	19.6	0.637	0.9
	90	24.7	0.412	1.4
	105	22.2	0.443	1.1
	125	20.1	0.475	1.0
Jones and White. High Pressure Cylinder.	50	16.8	0.414	1.4
	70	14.3	0.418	1.6
	90	13 4	0.432	0.1
	105	9.5	0.336	0.0
	125	10.0	0.381	0.0

The variation of these constants with pressure is shown in Fig. 314. The tendency is certainly to straight-line variation for nearly all the constants, but is not surely defined. For the tests of Thomas and Ross, the average value of b is about 0.5, and for those of Jones and White about 0.4. A fairly good

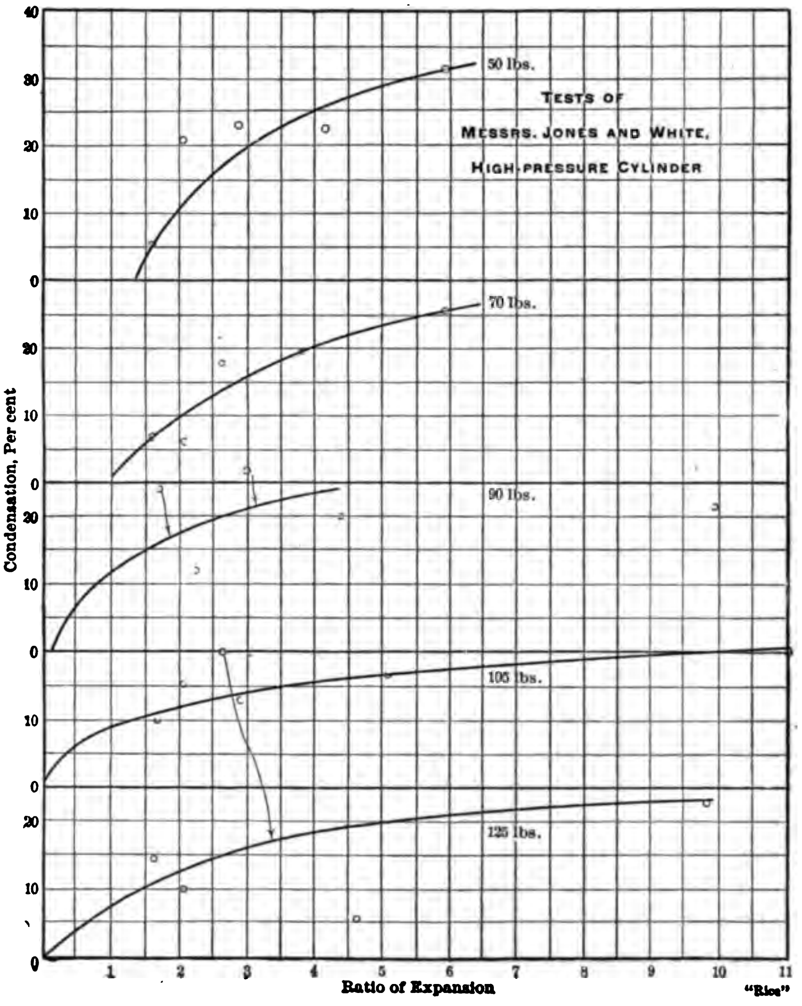

FIG. 312.

approximate equation would be gotten for variation of condensation with ratio of expansion by taking a and c as constant at 18 and 1 respectively, and getting the value of b from the equation $b = 0.70 - 0.0035p$, where p is the pressure in pounds absolute per square inch.

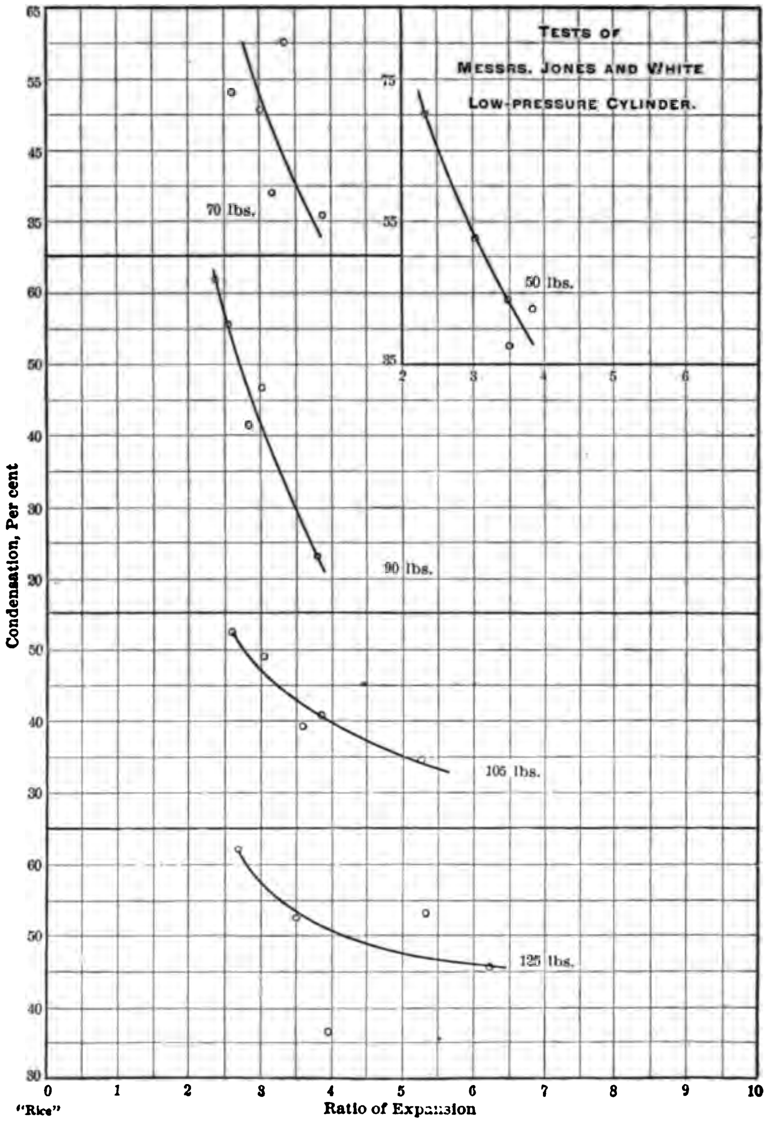

FIG. 313.

The elements which may affect condensation have all been considered, and the action of each determined, as well as may be, by varying it while others were kept constant. It remains to combine the separate actions into a single formula, and to

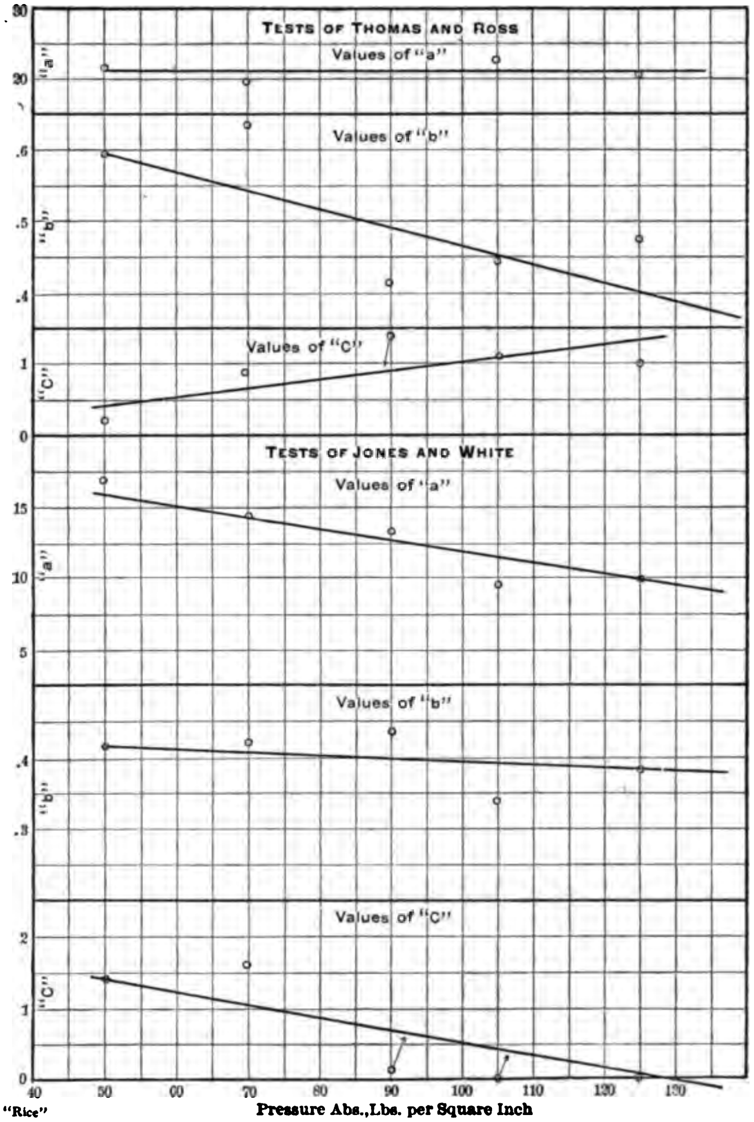

FIG. 814.

consider how well this formula represents the results of experiment.

A FORMULA FOR ESTIMATING CONDENSATION.

For this purpose it is not necessary to consider other than a cast-iron surface, because the percentage saved by any other surface is known, and, besides, this is the almost universal metal for cylinders.

The writer has already expressed his opinion that the temperature range of the steam in itself is not a factor. Undoubtedly the temperature range of the metal and water film is proportional to the condensation, but this range is not yet known, and, if it were, is an effect, not a cause, and hence should not logically enter into the formula. The temperature range from admission to release would seem the one to which the metal is most likely to correspond, and the amount of this range is determined by the ratio of expansion, the effect of which has been considered.

We have, then, as functions which should appear in the formula, speed, pressure, and ratio of expansion, the variation with each being complex. Since, in designing, the pressure is ordinarily fixed at the start, and since the change with pressure is a right-line variation, the constants for the equation may be conveniently calculated for different pressures, and this will leave speed and ratio of expansion as the two variable quantities.

In getting a formula for condensation as a percentage of total steam the dimensions of the cylinder must be considered, for the area per pound of steam at cut-off has an influence on the condensation measured in this way. The area per pound of steam will be determined by the diameter of the cylinder and the length of stroke up to cut-off, this latter depending, in turn, upon the ratio of expansion. The effect of the change in area by change in ratio of expansion will be included in the variation whose equation has already been determined; the area per pound of steam will be inversely as the diameter of the cylinder, so that the diameter should enter as a factor into the denominator of the expression for condensation. The equation would be $y = C\frac{\text{function }(r-1)}{d \text{ function } N}$. The exponents from Figs. 308, curve B, and 314, curve b, would be:

Pressure	Exponent of	
	N	$(r-1)$
50	.426	.596
60	.414	.570
70	.399	.544
80	.386	.518
90	.373	.492
100	.360	.467
120	.334	.414
130	.320	.389

Solving for the values of C in the equation gives the following, if d is taken in inches, and N in revolutions per minute :

TESTS OF MARKS AND BARRACLOUGH.

Pressure......	120	120	120	100	100	100
Test....	1	3	5	6	8	10
"C".........	75.90	70.90	76.67	80.15	82.42	86.71
Average......		74.49			83.09	

Pressure......	80	80	80	60	60	60
Test..........	11	13	15	16	18	20
"C".........	105.44	109.42	105.45	130.17	128.48	126.90
Average......		106.77			128.52	

TESTS OF THOMAS AND ROSS.

Pressure......	50	50	50	70	70	90
Test..........	1	4	5	7	9	11
"C".........	105.61	165.22	192.77	121.80	116.22	99.18
Average......		154.53			119.01	95.47

Pressure...	90	110	110	110	130	130	130
Test.......	14	16	18	20	22	23	24
"C"......	91.76	89.95	92.62	68.69	88.98	82.59	70.58
Average...			83.75			80.72	

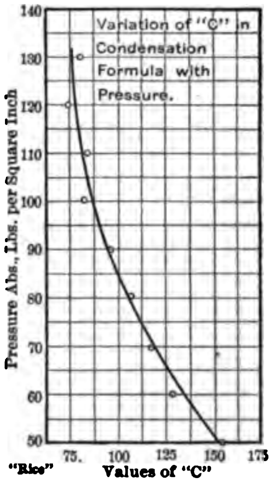

FIG. 315.

The agreement is quite good between speeds of 25 and 85 and from 1.8 to 8 expansions.

The variation for the constant with pressure is shown in Fig. 315. The values fall into a smooth curve from which values can

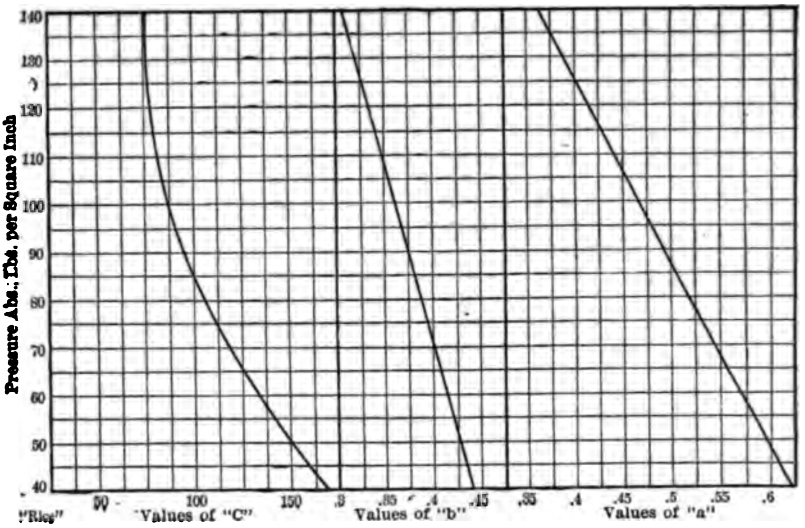

FIG. 316.

be taken for any pressure. Fig. 316 shows the variation of the constant and the two exponents in the equation $y = C\frac{(r-1)^a}{dN^b}$ with pressure, and tabular values from these curves are given below.

VALUES OF CONSTANTS FOR EQUATION.

Pressure Lbs.	a	b	C
40	0.620	0.440	168
50	0.594	0.426	150
60	0.568	0.412	133
70	0.543	0.399	118
80	0.517	0.384	106
90	0.491	0.373	95
100	0.466	0.359	87
110	0.440	0.346	81
120	0.414	0.333	78
130	0.389	0.320	76
140	0.363	0.306	75

A comparison will now be made of the condensation as computed by this formula with results from tests used in its derivation and some others which were available. The pressure varies from 40 to 130 pounds, the speed from 10 to 380 revolutions per minute, and the ratio of expansion from 1.6 to 15.

COMPUTED AND ACTUAL INITIAL CONDENSATION.

TESTS OF MARKS AND BARRACLOUGH.

Tests.	Condensation, Per Cent. Actual.	Condensation, Per Cent. Computed.	Error, Per Cent.
1	24.5	22.7	− 1.8
3	25.9	25.3	− 0.6
5	35.0	32.0	− 3.0
7	26.5	24.3	− 2.2
9	32.1	29.8	− 2.3
11	27.8	25.1	− 2.7
13	34.5	30.1	− 4.4
15	43.6	39.2	− 4.4
17	32.7	30.8	− 1.9
19	41.8	36.2	− 5.6

TESTS OF THOMAS AND ROSS.

1	49.2	58.8	+ 9.6
3	46.6	35.8	− 10.8
5	28.2	18.5	− 9.7
6	37.6	32.6	− 5.0
8	43.2	37.4	− 5.8
11	43.4	36.5	− 6.9
13	18.2	19.3	+ 1.1
15	58.3	47.0	− 11.3
17	48.3	35.4	− 12.9
20	20.2	17.8	− 2.4
22	48.3	37.2	− 11.1
24	22.7	22.3	− 0.4

TESTS OF BOWEN AND WEBER.

1	24.5	19.7	− 4.8
3	46.4	45.7	− 0.7
6	25.6	25.9	+ 0.3
8	53.1	44.0	− 9.1
10	24.1	31.0	+ 6.9
12	16.4	18.6	+ 2.2
14	13.3	23.0	+ 9.7
20	6.2	16.8	+ 10.6

TESTS OF H. K. SPENCER.

1	25.0	19.6	− 5.4
3	36.5	28.0	− 8.5
5	56.7	42.8	− 13.9
7	78.4	64.5	− 13.9

TESTS OF JONES AND WHITE.

Tests.	Condensation, Per Cent.		Error, Per Cent.
	Actual.	Computed.	
1	22.6	43.2	+ 20.6
3	44.9	22.3	− 22.6
5	14.4	15.1	+ 0.7
7	16.6	33.6	+ 17.0
9	14.6	12.4	− 2.2
11	21.2	55.2	+ 34.0
14	11.9	20.2	+ 8.3
17	19.5	35.2	+ 15.7
19	6.2	20.8	+ 14.6
21	31.5	56.5	+ 25.0
25	5.3	16.5	+ 11.2

TESTS OF DENTON AND JACOBUS.

1	15.2	14.6	− 0.6
3	22.1	20.9	− 0.2
6	29.4	28.9	− 0.5
8	22.3	22.3	0.0
11	33.1	33.4	+ 0.3
13	41.1	43.8	+ 2.7
15	32.4	29.4	− 3.0
20	39.5	45.2	+ 5.7
27	52.5	63.0	+ 10.5

TESTS OF P. W. WILLANS.

Simple Condensing.

1	16.1	15.1	− 1.0
3	21.1	16.7	− 4.4
7	25.2	19.6	− 5.6
9	27.7	22.3	− 5.4

Average error for all tests	−0.019
Maximum positive error	34.00
Maximum negative error	22.60
Minimum error	0.00

It is hardly to be expected that a formula can be made to fit *all* cases and have so few variations as are allowed the one under discussion. The error, in some cases, is larger than could be wished, but it seems about equally positive and negative. The average error for all tests computed is practically 0.

The derivation of the formula is based on experimental data, but the elements taken are the logical ones to use; and the comparison with results of tests shows it to be extremely accurate in the great number of cases. Indeed, it is remarkable that so simple a formula should cover accurately as wide a faces off the underside of the sheet exactly at right angles to the longitudinal axis of the bolt. This not only insures a much tighter fit, but guarantees absolutely against any bending of the head, when screwing it close up to the crown sheet.

The holding power of the stay bolt when provided with a nut is considerably increased, when red hot, by countersinking the nut and well riveting the bolt into the same, as shown in specimen No. 14.

The characteristic failure of the bolts when screwed through and riveted over, was by the sheet bagging down, stretching out the threads to a bell-mouth shape, and shearing off a small annular ring representing the thickness of the riveting. It will be observed, when referring to specimens 1 to 4 and 15, that the edges of the head are very shallow where they are sheared off in line with the edge of hole, and that the holes are stretched to such an extent that the threads lost their holding power. Generally speaking, the use of a nut increases the holding power of the stay bolt over the plain riveting, when tested cold, about 100 per cent., and 50 per cent. when heated to a bright red.

One of the most noticeable features shown in these tests is the comparatively slight decrease in holding power of any of the forms of crown stays until a temperature exceeding a black or dull red has been reached. This is especially so in the case of test No. 14, specimen No. 1, which, at a dull red, showed a strength of 14,800 pounds, and the average strength of the same, cold, was 16,350 pounds. The results of the tests would seem to support the statement that the average holding power of the usual form of stay bolt at a dull red or almost black heat would be decreased from its strength cold about 50 per cent., and at a bright red, decreased to about one-fifth of its original strength, except in specimens 11, 12, 13, and 16, which are decreased to about one-fourth of their original strength. In the case of specimens 13 and 16, their holding power would be very much increased by the use of a thicker crown sheet, as they mostly failed, both hot and cold, by the head pulling through the sheet.

The conclusions of the writer are:

(*a*) That the centre rows (5 to 10, according to the size of boiler) of the crown stays should be provided with solid button heads like No. 11, or with nuts like No. 14, to prevent pulling through in case the crown sheet is overheated.

TESTS OF PROFESSORS DENTON AND JACOBUS.

Tests.	Speed R. P. M.	Ratio of Expansion.	Per Cent. Condensation.
1	70.4		15.2
2	61.6		13.9
3	25.7		22.1
4	17.3	1.60	26.3
5	12.6		32.3
6	10.3		29.4
7	8 9		32.4
8	87.6		22.3
9	61.9		26.7
10	58.0		26.4
11	28.6	2.80	33 1
12	16.1		39.1
13	13.1		41.1
14	8.6		45.0
15	86 0		32.4
16	64.1		37.8
17	60.9		29 2
18	59.9		34.3
19	59.8		37.8
20	25.6		39.5
21	23.7	4.25	42.8
22	17.3		43.8
23	13.3		47.2
24	13.1		50.8
25	13.0		50.9
26	10.5		54.8
27	10.0		52.5
28	8.6		56.8

TESTS OF MESSRS. MARKS AND BARRACLOUGH.

Tests.	Initial Pressure.	Speed R. P. M.	Per Cent. Condensation.
1	117.0	85.02	24.5
2	118.1	67.00	25.7
3	119.4	55.02	25.9
4	120.7	40.62	30.1
5	120.0	26.60	35.0
6	100.4	83.85	24 5
7	100.7	66.30	26.5
8	102.5	54.90	27.8
9	102.8	39.30	32.1
10	102.7	28.60	37.5
11	77.3	85.40	27.8
12	78.6	69.70	30.1
13	83.5	56.07	34.5

TESTS OF MESSRS. MARKS AND BARRACLOUGH.—*Continued.*

Tests.	Initial Pressure.	Speed R. P. M.	Per Cent. Condensation.
14	81.8	39.72	35.7
15	82.2	25.70	43.6
16	59.8	85.27	30.6
17	60.	69.63	32.7
18	61.6	55.62	37.6
19	62.9	41.93	41.8
20	62.4	26.64	48.1

TESTS OF MR. P. W. WILLANS.

High-Pressure Cylinder.

Tests.	Initial Pressure.	Speed R. P. M.	Per Cent. Condensation.
1	125.91	402.3	10.59
3	81.24	401.2	8.90
4	60.50	404.4	11.69
5	37.16	398.9	11.49
6	127.81	311.1	10.50
8	.03	301.5	12.18
9	59.46	302.0	13.08
10	35.07	300.1	16.56
11	126.14	203.2	11.95
12	84.32	198.0	17.87
13	60.57	203.0	17.94
14	35.25	196.5	25.52
15	114.91	114.6	18.69
16	83.44	116.1	20.88
17	39.49	112.5	32.15

TESTS OF MESSRS. THOMAS AND ROSS.

Tests.	Initial Pressure.	Ratio of Expansion.	Per Cent. Condensation.
1	48.2	6.54	49.2
2	48.5	4.24	48.1
3	53.3	3.36	46.6
4	53.8	2.35	33.8
5	52.7	1.76	28.2
6	70.5	15.50	37.6
7	70.9	4.57	45.3
8	71.5	4.36	43.2
9	71.2	2.43	26.4
10	85.8	9.32	57.6
11	89.0	5.32	43.4

TESTS OF MESSRS. THOMAS AND ROSS —*Continued.*

Tests.	Initial Pressure.	Ratio of Expansion.	Per Cent. Condensation.
12	90.6	3.36	32.6
13	90.6	2.15	18.2
14	90.6	1.84	17.0
15	105.0	10.90	58.3
16	106.5	8.16	51.9
17	108.4	6.13	48.3
18	107.2	3.92	35 2
19	108.2	3.90	35.0
20	112.3	2.05	20.2
21	121.2	10.70	55.0
22	124.2	7.15	48.3
23	126.2	4.65	36 6
24	125.4	2.60	22.7
25	126.4	2.07	22.4

TESTS OF MESSRS. JONES AND WHITE.

High-Pressure Cylinder.

Tests.	Initial Pressure.	Ratio of Expansion.	Per Cent. Condensation.
1	124.6	9.82	22.6
2	126.1	4.63	5.3
3	126.7	2.66	44.9
4	128.4	2.04	9.9
5	130.9	1.62	14.4
6	101.3	10.98	19.8
7	106.9	5.04	16.6
8	107.5	2.86	12.6
9	109.5	2.03	14.6
10	109.4	1.65	9.8
11	85.1	9.85	21.2
12	88.9	4.38	19.7
13	88.4	2.96	26.5
14	91 4	2.24	11.9
15	88.9	1.71	24.0
16	70.2	5.96	25.8
17	69.7	3.80	19.5
18	69.3	2.60	17.8
19	69.0	2.06	6.2
20	70.1	1.61	6.7
21	52.1	5.97	31.5
22	51.8	4.20	22.7
23	49.61	2.90	23.1
24	50.5	2.03	20.9
25	51.1	1.62	5.3

TESTS OF MESSRS. JONES AND WHITE.

Low-Pressure Cylinder.

Tests.	Initial Pressure.	Ratio of Expansion.	Per Cent. Condensation.
1	11.9	2.70	63.0
2	16.8	3.98	36.2
3	25.5	3.52	52.4
4	24.9	5.31	52.7
5	29.7	6 23	45.3
6	10.4	2.58	52.2
7	16.4	3.59	38.9
8	22.6	3.06	49.0
9	27.3	3.84	40.6
10	26.5	5.27	34.4
11	11.1	3.80	22.8
12	15.5	2.38	61.5
13	17.5	2.52	55.6
14	19.3	3.04	46.8
15	26.1	2.85	41.0
16	11.5	2.61	53.0
17	16.2	3.18	38.7
18	18.0	3.01	50.6
19	20.0	3.38	60.0
20	24.0	3.89	35.8
21	8.8	2.32	69.9
22	9.8	3.02	52.5
23	12.3	3.48	48.8
24	15.7	3.84	42.8
25	19.6	3.50	37.5

DISCUSSION.

Mr. Geo. I. Rockwood.—On page 979 the author states that his formula $y = C\frac{(r-1)^a}{dN^b}$ reveals the relative importance of the various factors which together produce initial cylinder condensation. I think the formula can apply only to engines of the single-cylinder unjacketed type, because it is this type only of which it may be said, "to reduce the loss, use a large diameter, a small ratio of expansion, and high speed"; and this saying applies only to certain kinds of small automatic engines having large clearance and a single positively moved valve. Pumping engines and slow-speed mill engines suffer less from initial cylinder condensation than those which have short strokes, high speed, etc.

I doubt whether the formula—without having had time to examine it carefully—takes into account the effect of the clearance area exposed to the incoming steam every stroke. This area is very different in different types of engines.

It appears to me that the paragraph as it stands now is intended to apply to all sorts of steam engines, and should, therefore, be modified as suggested. I think that a formula which would apply correctly to all types of engine is impossible of realization, and that it would be of little use if found.

Mr. William Kent.—I hope that when Mr. Rice revises this paper for final publication in the *Transactions*, he will add a few paragraphs, condensing his conclusions into, say, one page, so that we can find them without having to read the whole paper. Referring to the formula on page 975 : $y = \frac{Cf(r-1)}{df(N)}$, I had to look all through the paper to find what these symbols meant. The letter *f* in the formula, I believe, is used to mean "function," but the ordinary engineer does not understand that *f* means function unless it is so explained. I hope that he will put the whole subject in such a shape that we can find an answer to a question like this : Given a Corliss engine of such a size and such a speed, cutting off at one-sixth of the stroke, what is the cylinder condensation? If a man wanted to get that information from this paper, it would be a labor of hours to find it.

Mr. J. B. Stanwood.—I notice that the author ignores the area of internal surfaces of clearance spaces and walls of cylinders, up to point of cut-off, as having any effect upon the percentage of cylinder condensation. I have always been under the impression that the amount of these surfaces is an important factor of this problem. Why does not Mr. Rice take this factor into consideration in his efforts to form a general law for cylinder condensation?

Prof. R. H. Thurston.—This paper presents probably the most complete study and discussion of this subject which has appeared to date. The facts were revealed by a succession of investigators, beginning with Smeaton's experiments with the old Newcomen engine as given form by Desaguliers, continuing with those of Watt upon the famous Newcomen model, and on his own later constructions, and, in later times, the work of Clark on the British locomotives of 1850, and Hirn on the Alsatian engines, and Isherwood on marine engines, and the still later work of ou:

contemporaries and colleagues with which all engaged in this department of engineering are familiar.

Rankine was perhaps the first to attempt to formularize the laws of the internal wastes of the engine, basing his algebraic expressions upon the experiments of Isherwood on the U. S. S. *Michigan.* He took the condensation to be proportional to the time of exposure of the steam to the condensing action of the cylinder wall up to the point of cut-off, to the range of temperature worked through, and to the area exposed by the retreat of the piston per unit weight or volume of the working fluid. Later investigation soon showed that the first of these factors was not the controlling condition ; but that the period of exposure to the cooling action on the exhaust side, preceding admission, was more influential, and that whatever heat drained out during this period is inevitably restored during admission by the entering steam coming in contact with the chilled cylinder wall. Cotterill made a very beautiful investigation, availing himself of the classical work of Kirsch, in turn based upon Fourier, and deduced a logarithmic expression which is probably more accurate from the standpoint of the pure physicist than any other yet proposed.

Empirical expressions, of which that of Rankine, that of the writer, and that here proposed are representative, are simpler, easier of application, and practically no less valuable. These latter forms of expression have been slowly coming into more and more accurate shape, and their constants are continually being more and more completely established until, in the paper now brought to our attention, an expression is deduced for this waste, the waste which controls the design and construction and the apportionment to its work of the modern steam-engine more than does, perhaps, any other physical condition under the eye and hand of the engineer. It is this waste which principally dictates the adoption of the multiple-cylinder engine, of the steam jacket, and of superheated steam, and all their accessories.

Researches, experimental, like those of Marks and Barraclough and their kind, and those of collaboration, like that of the author of this paper, have been in progress at Sibley College for years past, and, as here in part shown, the result has been the collection of a large quantity of material upon which to base such a study of the subject. The work of Professor Rice is the last and perhaps the most fruitful of the series. He certainly has obtained a more accurate measure of the internal wastes due to this method of loss of heat in available form than any one of his predecessors, and the fact is likely to prove one of practical importance. The extensive work, representing no inconsiderable proportion of a year's labor as a candidate for a Master's degree in engineering, will probably be long preserved in the collections of Sibley College as a noteworthy example of prolonged, patient, and productive research.

As its author has taken occasion to remark, it must not be expected, however, that any such expression as is here derived, or any other formulation of the law of cylinder condensation, whether rational or empirical in origin, will apply with accuracy to all cases. The algebraic expression of observations of many engines of representative classes and of good average construction and proportions will apply only to similarly good average representative cases, later selected for their application. The laws will remain unchanged ; but every variation in the proportions of engines, in the condition of their internal surfaces, and in the quality of the steam exchanging heat with the cylinder walls, will modify the constants of the absolutely correct equation, should it finally be derived by a later investigator. Lubrication, oxidation, special treatment of the interior of the engine, and peculiar proportions of the cylinder, will all affect the results of application of any formula derived from common practice. Notwithstanding these variations, it will probably remain the fact that a well-constructed expression for cylinder condensation will find real use in general practice, and will afford much and valuable aid to the designer and constructor. It will assist in the construction of the balance sheet of heat supply and heat expenditure, and in the estimation of efficiencies in all cases of usual practice.

The statement of the practical method of reducing wastes may, I think, be put into a more acceptable form. I would not say " use a large diameter, a small ratio of expansion, and high speed," but would rather say :

(1) Adopt such a proportion of engine cylinder as will give lowest ratio of area of cylinder wall, producing condensation,—*i.e.*, measured up to point of cut-off—to the volume enclosed by it.

(2) Adopt as large a ratio of expansion as the existing conditions may be found to make most profitable.

(3) Employ as high a speed of rotation and of piston as practice shows to be safe and not too costly on the maintenance account.

Under the first head it will be found that a low ratio of expansion dictates, from this point of view, a comparatively large proportion of diameter to stroke of piston, while a high ratio of expansion increases the proportion of stroke to diameter. One secret of the success of the multiple-expansion engine will sometimes be found in the fact that the proportions adopted are, in this respect, satisfactory. This is especially likely to be true of the compound engine with large expansion ratios, as adopted with comparatively high steam pressures for that type.

Under the second head it will be found that the multiple-cylinder machine, suitably proportioned, gives a high yet economical total ratio of expansion through the expedient of holding down the ratio, in each of the several cylinders of the series, to that known to be, at least approximately, the ratio of maximum efficiency for the single cylinder.

As to the third point, experience fixes the practicable maximum piston speed. This is seen, as shown especially by Professor Barr's papers, to be about 600 feet per minute for the practice of our day.

The real principle which controls, properly, in this matter, is this: Seek, by every practicable and economical expedient, to make cylinder condensation a minimum, and proportion the engine, and arrange for its operation, in such manner as will enable it to pay highest dividends upon the capital absorbed in the establishment and permanent operation of the machine. The object sought by every good engineer in designing and in constructing and operating the steam engine is to effect as high economies as he can afford to pay for, anticipating satisfactory profit on the investment made in effecting such economies.

The paper before us will undoubtedly repay much more extended and minute study than can be given it in a single reading; its data alone present a most valuable work of compilation, and the deductions seem likely to find very useful application in every-day practice.

*Mr. Arthur L. Rice.**—In regard to the criticism of Messrs. Rockwood and Stanwood that the formula here proposed takes no account of the area of condensing surface, it is plainly stated on page 974 that the " area per pound of steam at cut-off has an influence on the condensation " measured as a percentage of total

---

* Author's closure, under the Rules.

steam. The area up to cut-off varies as $d^2 + \frac{dl}{r}$, where l is length of stroke, and d and r as heretofore; the volume up to cut-off, or, for constant pressure, the weight varies, as $\frac{d^2l}{r}$; hence the area per pound varies as $\frac{r}{l} + \frac{1}{d}$. As stated on page 974, it was considered that the term involving ratio of expansion would be sufficiently taken care of by the variation of condensation with expansion previously considered, and the term involving diameter was introduced into the formula. The author is now at work on an investigation, which he hopes to have ready in the fall, of the effect of taking into account the neglected term $\frac{r}{l}$.

In regard to Mr. Kent's desire for a *résumé* of the paper, the writer would say that he is not yet done with the subject and is not ready to give a *résumé*. The paper, as it stands, shows the work so far done, and the results are that condensation seems to vary *regularly* with change of speed, ratio of expansion, and area per pound of steam at cut-off; the rate of variation with each of these factors depends on the initial pressure of the steam; temperature range, except as controlled by expansion, has no regular and well-defined effect. It is not certain that the formula is in its best form, but the writer is working on it, and when sure that it is in the best possible shape, will reduce it to tabular or graphical form for convenient use.

DCCXLIII.*

EXPERIMENTS IN BOILER BRACING.

BY FRANCIS J. COLE, PATERSON, N. J.
(Member of the Society.)

THE following investigation into the holding power, at different temperatures, of various styles of locomotive firebox crown stays, was made by the writer for a prominent railroad company. The results are thought to be of sufficient interest to present to this Society.

The object in view was to test them as nearly as possible under the same conditions as in actual service, when used in staying the firebox of a locomotive, and particularly to note the relative decrease of the holding power at high temperatures.

In all these tests, it is assumed that the bolts are spaced 4 by 4 inches, centre to centre, supporting an area of 16 square inches.

The total stress which each one would be required to sustain, due to the pressure of the steam, would be this area multiplied by the maximum boiler pressure.

At 150 pounds steam pressure = 2,400 pounds.
" 160 " " " = 2,560 "
" 170 " " " = 2,720 "
" 180 " " " = 2,820 "
" 190 " " " = 3,040 "
" 200 " " " = 3,200 "

The pocketing, or bagging down, which is characteristic of an overheated crown sheet caused by low water, was imitated by using a bearing plate of ½-inch steel, 8 by 8 inches square, with a hole 4½ inches in diameter bored through its centre. The area of this hole is 15.9 square inches. The specimens were screwed or driven into pieces of ⅜-inch steel plate, 12 by 12 inches square.

A 100,000-pounds Riehle screw testing machine was used,

---

* Presented at the Hartford meeting (May, 1897) of the American Society of Mechanical Engineers, and forming part of Volume XVIII. of the *Transactions*.

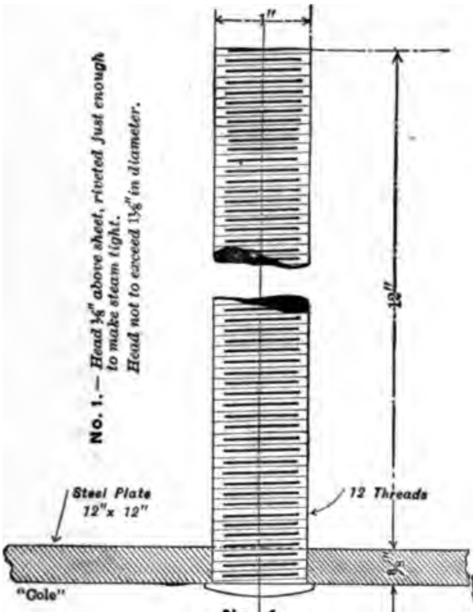

No. 1. — *Head $\frac{1}{8}$" above sheet, riveted just enough to make steam tight. Head not to exceed $1\frac{1}{8}$" in diameter.*

No. 1.

FIG. 317.

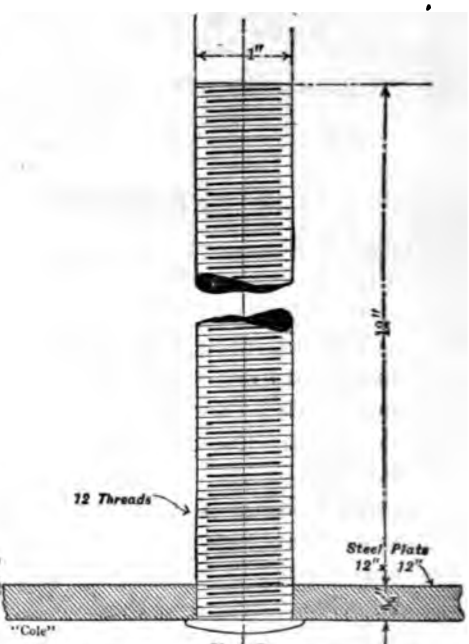

No. 2.

No. 2. — *Head $\frac{1}{8}$" above sheet and riveted over.*

FIG. 318.

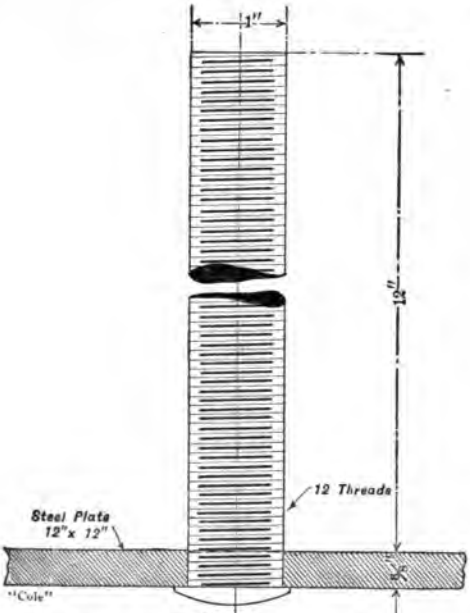

No. 3.

No. 3. — *Head $\frac{3}{16}$" above sheet and riveted over.*

FIG. 319.

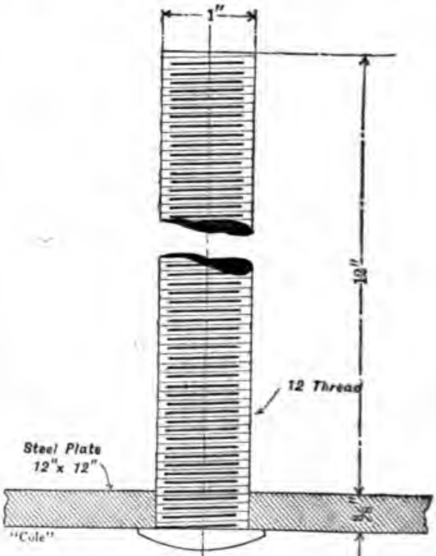

No. 4.

No. 4. — *Head $\frac{1}{4}$" above sheet and riveted over.*

FIG. 320.

the specimen plate and bolt being inverted, with the bearing plate between it and the head of the machine, the stay bolt hanging down through the middle. Sixteen different styles of crown stays were made, specimens numbered 1 to 16; 6 test pieces, each of 1 to 4; and 4 pieces, each 5 to 16, numbered 1 to 76.

These specimens represent the ordinary forms most commonly in use, and other styles which suggested themselves. The material used was 1-inch round mild steel of 58,390 pounds ultimate tensile strength, with an elastic limit of 38,900 pounds, and an elongation of 30.25 per cent. in 8 inches. The only exceptions to this were tests No. 2, specimen 6; and No. 70, specimen 16, which after fracture showed unmistakably to have been made of iron.

The ⅜-inch steel sheets, 12 by 12 inches (a few of the first were 6 by 6 inches) square, into which the bolts were screwed, were mostly cut from one large sheet, having lengthwise an ultimate tensile strength of 59,150 pounds, elastic limit of 28,800 pounds, with an elongation of 31.75 per cent. in 4 inches; and crosswise an ultimate tensile strength of 58,400 pounds, elastic limit of 28,040 pounds, with an elongation of 28 per cent. in 4 inches, both ways showing a silky fracture.

The specimens were heated in a small portable forge, alongside the testing machine. The plates, with the bolts projecting upward, were placed on the fire, and the heat localized in the centre over a diameter of about 6 inches, by keeping a small, bright fire, and dampening the outside with fine wet coal, to keep it from spreading.

In this method of heating, the head, or nut, would be hotter than the rest of the sheet, imitating in a measure the conditions which are present in a locomotive firebox. In all the hot tests the sheets were heated to a bright red, but in the first tests, Nos. 1–22, owing to the slow speed of the machine, and the time consumed in centring the specimen, the fracture did not take place until some of them were almost black; in the tests after No. 22, the speed was very much quicker, and arrangements were made for centring the specimens very rapidly. Evidently the temperature at parting is the correct one upon which to base the holding power of the bolts.

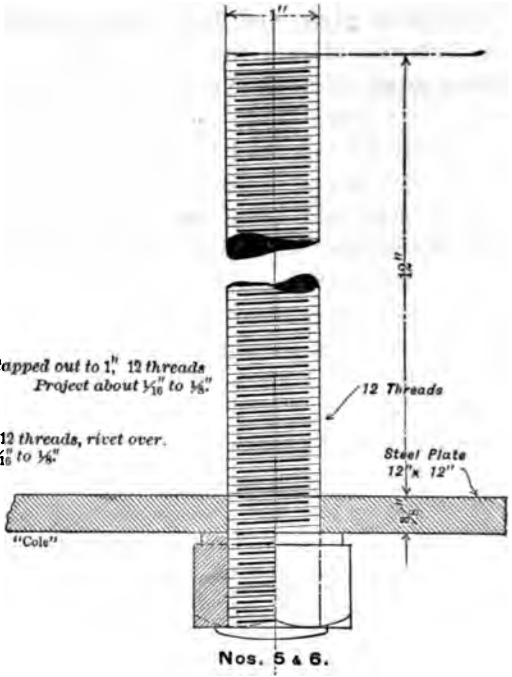

FIGS. 321 AND 322.

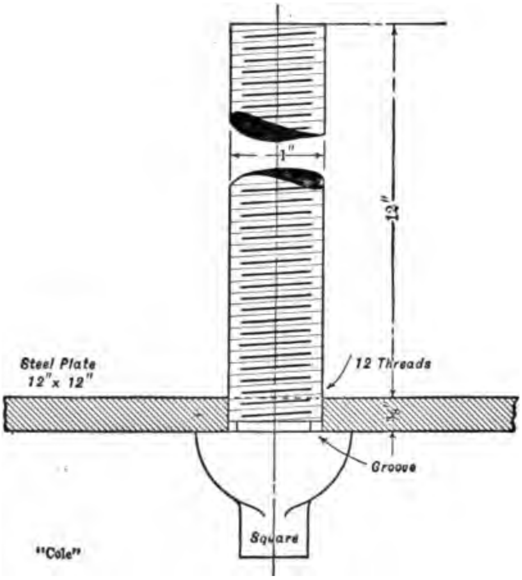

FIGS. 323, 324, 325, AND 326.

No. 11. *Button head no groove, countersunk.*

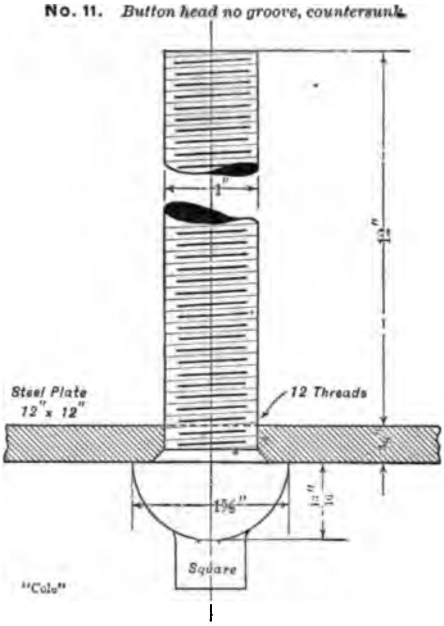

Fig. 327.

No. 12. *Button head no groove, washer.*

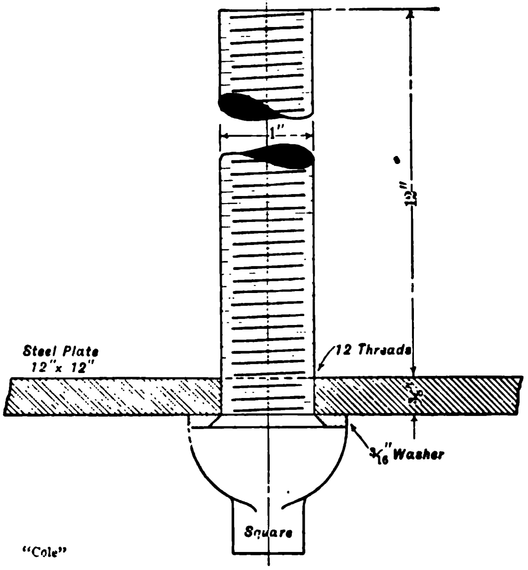

Fig. 328.

The average of the tests, in which those of lower temperature and doubtful results are not considered, is as follows :

Spec. No.	Tensile, Cold.	Strength, Hot.	REMARKS.
	lbs.	lbs.	
1	16,350	3,470	Head ⅛″ above sheet, riveted just enough to make steam-tight; head not to exceed 1⅛″ diameter.
2	16,700	3,473	Head ⅛″ above sheet, riveted over.
3	17,600	4,040	Head 3/16″ above sheet, riveted over.
4	20,733	4,000	Head ¼″ above sheet, riveted over.
5	41,950		⅞″ std. nut-tapped out to 1″, 12 threads, and riveted over; project about 1/16″ to ⅛″.
6	42,000	6,000	1″ std. nut, 12 threads, riveted over ; projects about 1/16″ to ⅛″.
7	38,120	7,095	Button head, ¾″ groove.
8	39,800	6,933	Button head, 13/16″ groove.
9		7,500	Button head, ⅞″ groove.
10	39,800	7,483	Button head, 15/16″ groove.
11	39,800	8,766	Button head, no groove, countersunk.
12	42,580	9,333	Button head, no groove, 3/16″ copper washer.
13	43,100	10,150	Button head, with 1 1/16″ reamed hole.
14	39,720	7,816	1″ std. nut, 12 threads, nut countersunk ¼″ and well riveted over.
15	24,000	4,613	Screwed in sheet, 12 threads, rivet head ⅜″ high and ½″ diameter ; largest head which can be formed.
16	40,300	9,730	Button head, with 1¼″ tapered reamed hole, 3″ thimble and nut.

Regarding the holding power of stay bolts screwed through ⅜″ plate and riveted over, as shown in specimens 1 to 4 and 15, it will be observed that the average holding power when cold is 16,350 pounds for the worst, and 24,000 pounds for the best; and when hot, 3,470 pounds for the worst, and 4,613 pounds for the best. This would indicate that the best riveted head which can be formed cold, made in the usual conical shape, has a holding power, hot and cold, very much less than the worst form of bolt with solid head, even when nicked or grooved deeply under the head, or bolt screwed through with a nut on under side of sheet.

It does not appear that the solid button head bolts are deficient in holding power when tested in this manner, but the principal objection to their use is the liability of injury when screwed into a firebox where the holes are not tapped at right angles to the sheet, and where the surface of the sheet is curved. This objection can easily be removed by properly seating the head. It is the regular practice of the locomotive company with which the writer is connected, to use a seating tool, which faces off the underside of the sheet exactly at right angles to the longitudinal axis of the bolt. This not only insures a much tighter fit, but guarantees absolutely against any bending of the head, when screwing it close up to the crown sheet.

The holding power of the stay bolt when provided with a nut is considerably increased, when red hot, by countersinking the nut and well riveting the bolt into the same, as shown in specimen No. 14.

The characteristic failure of the bolts when screwed through and riveted over, was by the sheet bagging down, stretching out the threads to a bell-mouth shape, and shearing off a small annular ring representing the thickness of the riveting. It will be observed, when referring to specimens 1 to 4 and 15, that the edges of the head are very shallow where they are sheared off in line with the edge of hole, and that the holes are stretched to such an extent that the threads lost their holding power. Generally speaking, the use of a nut increases the holding power of the stay bolt over the plain riveting, when tested cold, about 100 per cent., and 50 per cent. when heated to a bright red.

One of the most noticeable features shown in these tests is the comparatively slight decrease in holding power of any of the forms of crown stays until a temperature exceeding a black or dull red has been reached. This is especially so in the case of test No. 14, specimen No. 1, which, at a dull red, showed a strength of 14,800 pounds, and the average strength of the same, cold, was 16,350 pounds. The results of the tests would seem to support the statement that the average holding power of the usual form of stay bolt at a dull red or almost black heat would be decreased from its strength cold about 50 per cent., and at a bright red, decreased to about one-fifth of its original strength, except in specimens 11, 12, 13, and 16, which are decreased to about one-fourth of their original strength. In the case of specimens 13 and 16, their holding power would be very much increased by the use of a thicker crown sheet, as they mostly failed, both hot and cold, by the head pulling through the sheet.

The conclusions of the writer are:

(*a*) That the centre rows (5 to 10, according to the size of boiler) of the crown stays should be provided with solid button heads like No. 11, or with nuts like No. 14, to prevent pulling through in case the crown sheet is overheated.

No. 13. *Button head with reamed hole.*

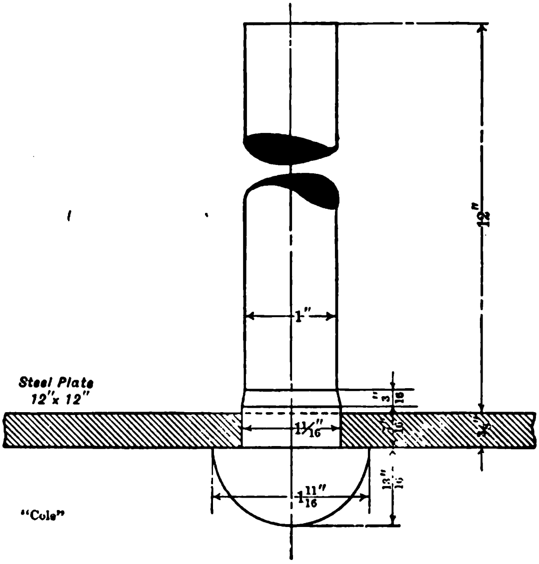

FIG. 329.

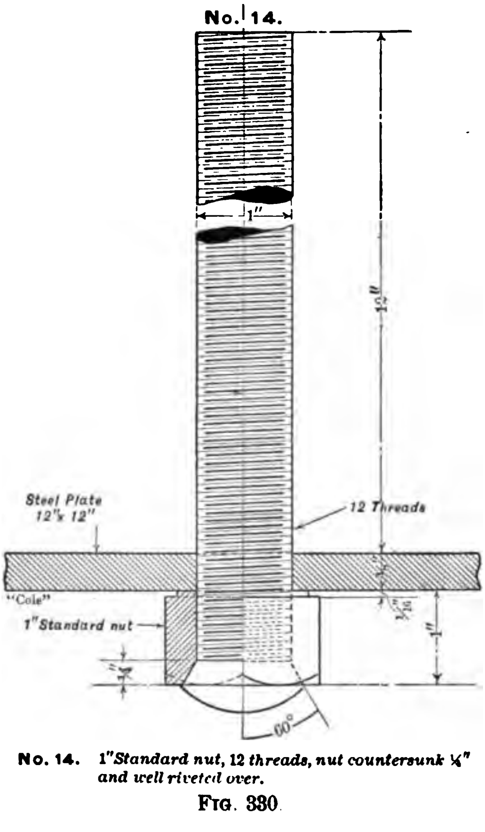

No. 14. *1" Standard nut, 12 threads, nut countersunk ¼" and well riveted over.*

FIG. 330.

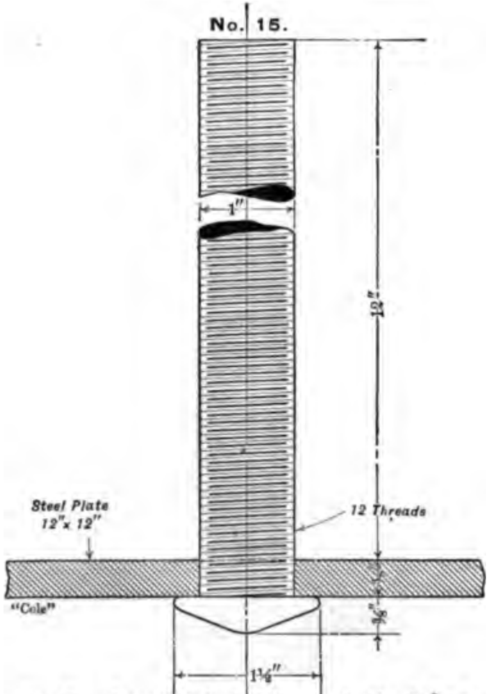

No. 15. *Screwed in sheet, 12 threads, rivet head ⅜" high and 1½" diam., largest head which can be formed.*

Fig. 331.

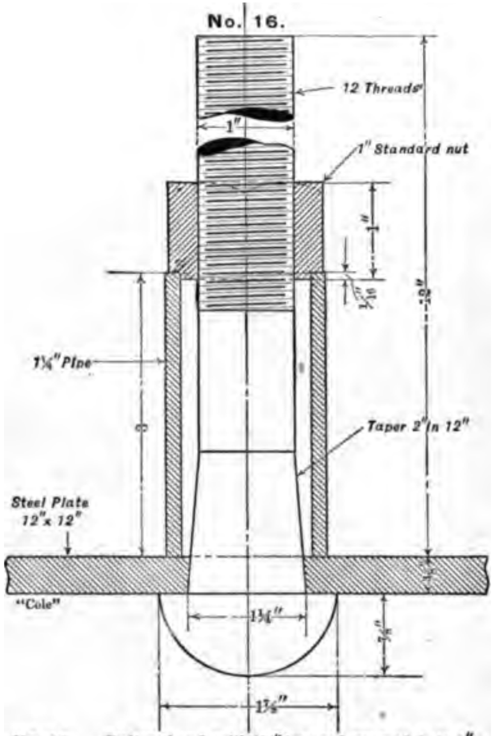

No. 16. *Button head with 1¼" tapered reamed hole, 3" thimble and nut.*

Fig. 332.

(*b*) Grooving or cutting out the first thread under the head should be avoided. It not only weakens the bolt in its most vital point, but the possibility exists that some bolts are liable to be cut deeper than necessary by careless workmen. Moreover, it is unnecessary, as tighter work can be done by slightly countersinking the sheet.

(*c*) It is good practice to enlarge the end screwed in the crown sheet for 1 inch or $1\frac{1}{4}$ inches directly under the button head, making it slightly taper. For 1-inch round crown stays a good proportion is to upset the lower end for $1\frac{5}{32}$-inch or $1\frac{3}{16}$-inch thread, leaving the upper end for 1-inch thread. For $1\frac{1}{8}$-inch round stays, lower end $1\frac{9}{32}$ inches, or $1\frac{5}{16}$ inches upper end for $1\frac{1}{8}$-inch thread.

(*d*) The argument often advanced, that it is safer in radial stay boilers to omit all heads or nuts on firebox ends of crown stays and allow a few to pull through easily in case of low water so as to put out the fire and relieve the pressure, does not seem to hold good in practice, as the sudden letting go of a few bolts throws such an additional load on the adjacent ones, that they are frequently unable to stand the strain and tear out row by row until the whole crown is blown down.

(*e*) As crown sheets are usually higher in front than behind and arched in the centre in radial stay boilers, good practice indicates that a few crown stays (say 10 or 12) in the front and in the centre—the highest point—should be left without heads or nuts, and simply riveted over. In case of low water these would pull out and relieve the pressure, before the rest gave way. A prominent railroad having this in view, leaves every other crown stay riveted over without solid button head or nut.

(*f*) It is better to face the sheet with a cutter, allowing the solid finished metal surfaces to come together without twisting or bending the crown stay, than to use a copper washer or to bend the bolt under the head in attempting to tighten it up against a rough uneven surface.

FIG. 333.

FIG. 334.

TESTS OF CROWN STAYS.

Specimen No.	Test No.	Elastic Limit.	Tensile Strength.	Time, Seconds.	Remarks.	
		Lbs.	Lbs.			
1	4	11,600	16,500		Cold 6″ plate; pulled through sheet.	Head $\frac{1}{8}$″ above sheet, riveted just enough to make steam tight; head not to exceed $1\frac{1}{8}$″ diameter.
1	10	13,000	19,400		Cold.	
1	14	11,000	14,800		Dull red; scarcely perceptible; almost black after parting.	
1	57		3,500	13	Cherry red; not quite as hot as No. 56; pulled through sheet.	
1	58		3,440	11	Bright red after parting; pulled through sheet.	
1	66	10,500	16,200		6″ plate; cold; pulled through sheet.	
2	6	12,400	16,700		Cold 6″ plate.	Head $\frac{1}{8}$″ above sheet, riveted over.
2	18		6,300		Red.	
2	19		6,200		Red.	
2	41		3,450	13	Bright red; 6″ plate.	
2	55		3,400	10	Bright red; pulled through sheet.	
2	56		3,570	10	Bright red after parting; pulled through sheet.	
3	3	12,000	17,600		Cold 6″ plate.	Head $\frac{3}{16}$″ above sheet, riveted over.
3	17		9,300		Dull red after parting.	
3	20		5,700		Cherry red.	
3	40		3,850	13	6″ plate; very bright red.	
3	53		4,300	12	Bright red; pulled through sheet.	
3	54		3,970	13	Bright red after parting; pulled through sheet.	
4	5	12,300	19,100		Cold 6″ plate.	Head $\frac{1}{4}$″ above sheet, riveted over.
4	8	16,000	22,300		Almost black after parting.	
4	12	6,800	8,900		6″ plate; cold.	
4	22	14,000	20,800		Cherry red, not quite as hot as No. 58;	
4	59		4,200	16	pulled through sheet.	
4	60		3,800	17	Bright red after parting: pulled through sheet.	
5	7	28,000	43,100		Cold 6″ plate.	$\frac{7}{8}$″ std. nut tapped out to 1″, 12 threads and riveted over; project about $\frac{1}{16}$″ to $\frac{1}{8}$″.
5	11	14,500	21,500		Dull red; almost black after parting.	
5	15	12,900	23,300		Dull red; almost black after parting.	
5	21		40,800		Cold 6″ plate.	
6	1	26,500	42,000		Cold 6″ plate.	1″ std. nut, 12 threads riveted over; project about $\frac{1}{16}$″ to $\frac{1}{8}$″.
6	2	24,000	32,200		Cold 6″ plate, iron.	
6	13	12,000	17,400		Dull red after parting.	
6	16		6,000		Plate red; nut bright red.	
7	25	22,000	39,240		Cold, broke in nick.	Button head, $\frac{3}{4}$″ groove.
7	29		7,850	15	Bright red; parted while bright red, same as No. 28.	
7	38		6,340	16	Bright red; broke in nick.	
7	47	22,000	37,000		Cold; parted in nick.	
8	32		7,700	10	Bright red; broke in nick.	Button head, $1\frac{3}{8}$″ groove.
8	33		6,400	12	Bright red; broke in nick.	
8	34		6,700	16	Bright red; parted in nick.	
8	52	26,000	39,800		Cold; parted midway, 6″ from lower end.	

TESTS OF CROWN STAYS.—(*Continued*).

Specimen No.	Test No.	Elastic Limit.	Tensile Strength.	Time, Seconds.	Remarks.	
		Lbs.	Lbs.			
9	42		6,630	23	Bright red ; parted in nick.	Button head, ⅞" groove.
9	43		7,500	23	Bright red ; parted at first thread.	
9	44		7,770	20	Bright red ; parted in nick.	
9	45		8,100	24	Bright red ; parted in nick.	
10	46		7,700	25	Bright red ; parted in first thread.	Button head, 1⅝" groove.
10	49		7,500	18	Bright red ; parted in first thread.	
10	50	26,800	39,800		Cold ; parted in centre 7¾" down.	
10	51		7,250	22	Bright red ; parted in first thread.	
11	24	27,000	39,800		Cold ; broke in bolt midway.	Button head, no groove, countersunk.
11	28		8,000	20	Bright red; parted while bright red; if anything a little hotter than No. 27.	
11	36		9,400	18	Bright red ; broke in first thread below nick.	
11	39		8,900	21	Bright red.	
12	30		10,000	18	Bright red; parted while bright red.	Button head, no groove, 3/16" copper washer.
12	31		9,200	19	Bright red ; parted while bright red.	
12	37		8,800	19	Bright red ; broke in first thread below nick.	
12	48	28,300	42,580		Cold ; parted 3" from lower end.	
13	23	32,500	43,100		Cold ; pulled head through sheet.	Button head with 1 1/16" reamed hole.
13	26	7,000 bright red.	26,000 black.		Slow speed ; red, head bright red.	
13	27		9,700	20	Bright red; faster speed than No. 26; parted while bright red.	
13	35		10,600	24	Bright red ; pulled through sheet.	
14	67	19,000	39,720		Pulled cold ; bolt broke.	1" std. nut, 12 threads, nut countersunk ¼" and well riveted over.
14	71		7,560	18	Bright red after parting.	
14	72		7,890	28	Bright red ; red after parting ; stripped in nut.	
14	73		8,000	23	Bright red after parting ; bolt broke between nut and sheet ; nut split slightly on one side, and riveting pulled in flush with top of nut.	
15	61	17,000	24,000		Pulled cold ; pulled through sheet, head sheared.	Screwed in sheet, 12 threads, rivet head ⅜" high and 1¼" diam., largest head which can be formed.
15	63		4,450	25	Bright red after parting ; pulled through sheet.	
15	64		4,900	23	Bright red; red after parting ; pulled through sheet.	
15	65		4,500	13	Bright red after parting ; pulled through sheet.	
16	62	22 800	40,300		Pulled cold; bolt broke, 7" from plate.	Button head with 1¼" tapered reamed hole, 3" thimble and nut.
16	68		9,660	17	Bright red after parting ; pulled through sheet.	
16	69		9,800	29	Bright red after parting ; pulled through sheet.	
16	70		6,630	14	Bright red after parting ; bolt broke; found to be iron.	

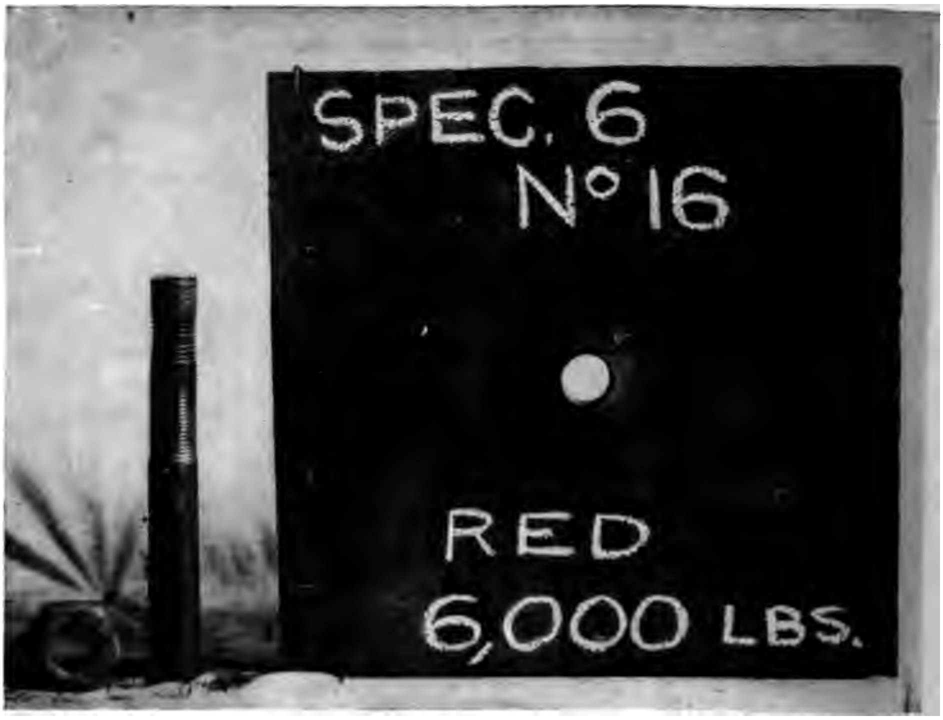

Fig. 335.

Fig. 336.

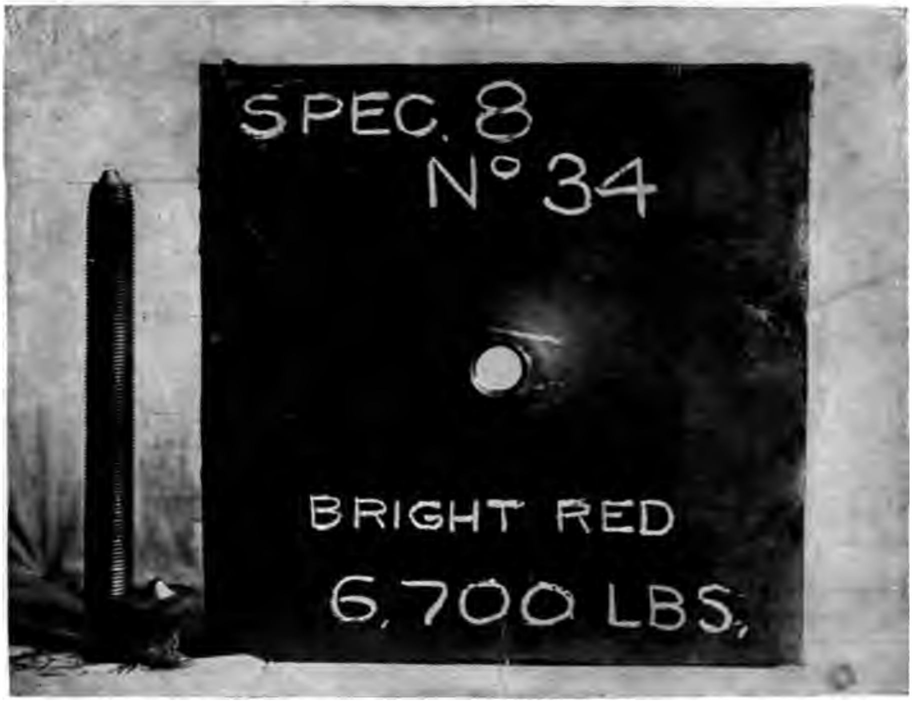

Fig. 337.

Fig. 338.

DCCXLIV.*

A CONTINUOUS STEAM-ENGINE INDICATOR.

BY THOMAS GRAY, TERRE HAUTE, IND.
(Member of the Society.)

THE instrument described in this paper was devised in the spring of 1892 with the object of obtaining a record of the performance of a gas engine during a series of successive cycles of operation. These records were to be used for the determination of the average indicated horse-power of the engine, and also for the study of the character of the successive explosions when the engine was governing, when the relative supply of air and gas was varied, etc. A somewhat crude form of the instrument was at that time constructed, and was successfully used during a number of tests. The great convenience of this kind of indicator not only for the study of gas-engine performance, but for the testing of all kinds of engines under rapidly varying conditions as to load, etc., was at once apparent, and led to the development of the forms of the instrument here described.

The most important feature of this kind of indicator is the mechanism for producing continuous forward motion of the record sheet by means of the backward and forward motion of the piston of the engine. A continuous uniform motion is of course readily obtained, either from one of the revolving shafts of the engine or from an independent source, and for some purposes is sufficient; but where the card is to be used for anything more than illustrative purposes, and even for that, it is desirable that the rate of motion of the paper should, at all parts of the stroke, bear a constant ratio to that of the piston.

A sketch of one form of the instrument which has been found to give satisfactory results is shown in Fig. 374. On the left of the sketch the cylinder of an ordinary indicator with its recording levers will be recognized. The recording pen is shown in contact with a ribbon of paper, *F*, near its lower edge. This

---

* Presented at the Hartford meeting (May, 1897) of the American Society of Mechanical Engineers, and forming part of Volume XVIII. of the *Transactions*.

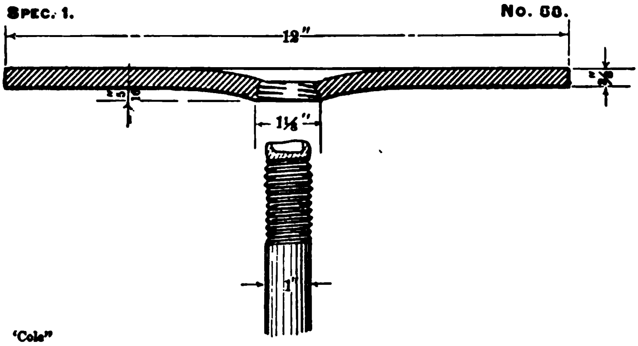

Fig. 341.

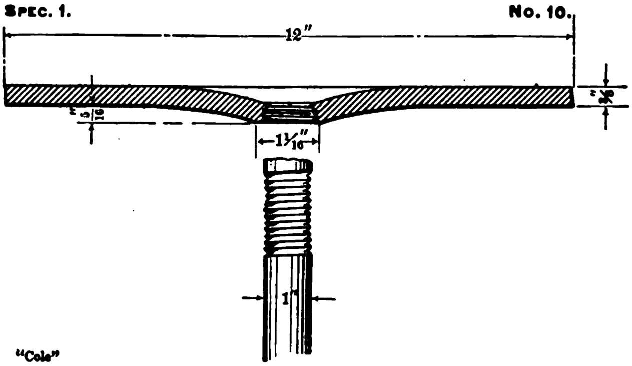

Fig. 342.

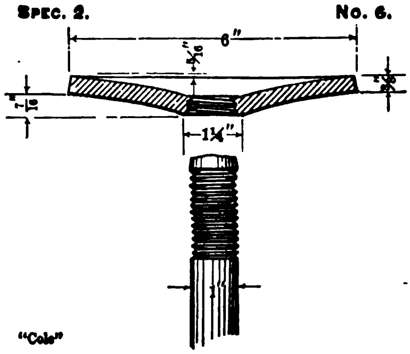

Fig. 343.

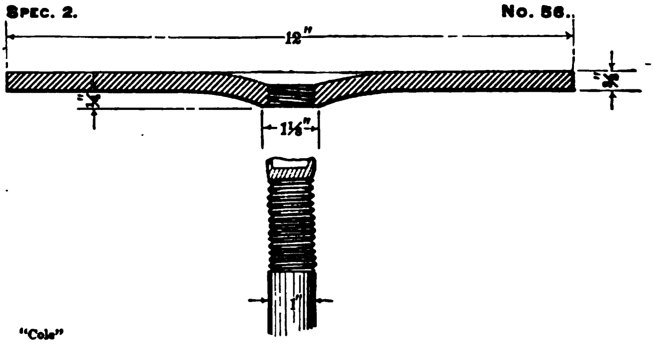

FIG. 344.

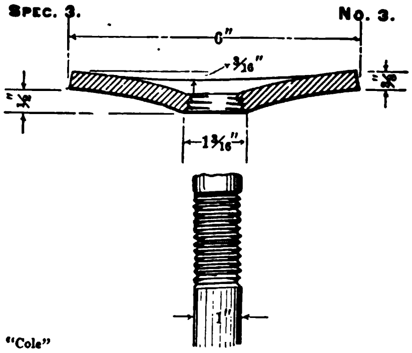

FIG. 345.

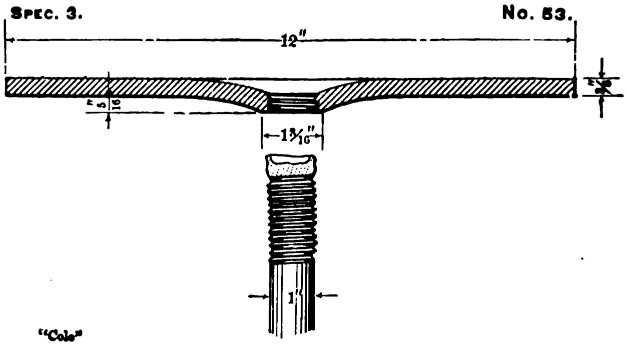

FIG. 346.

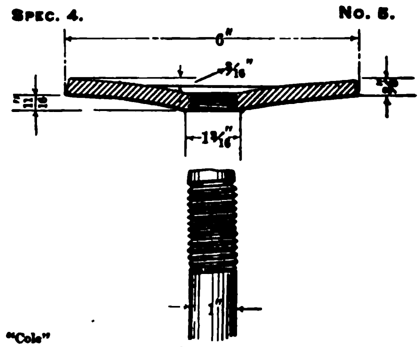

Fig. 347.

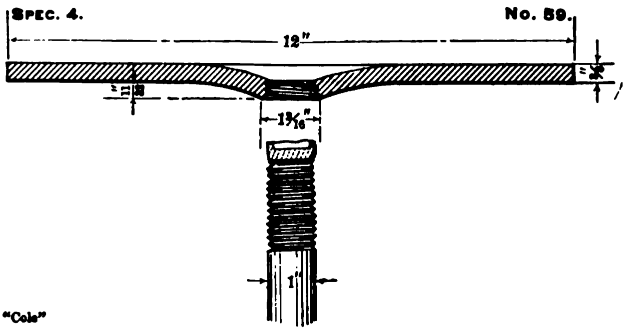

Fig. 348.

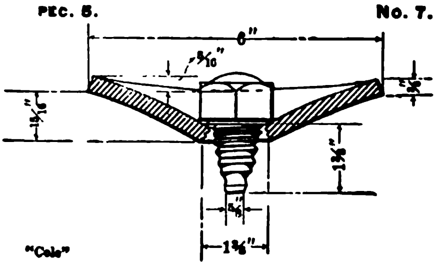

Fig. 349.

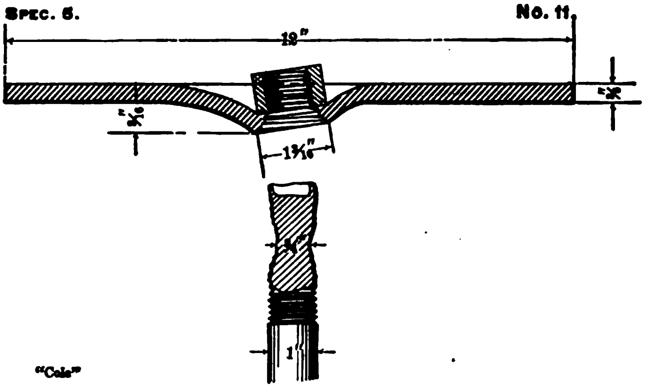

Fig. 350.

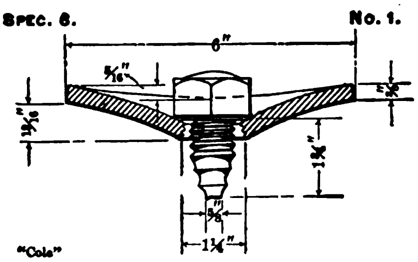

Fig. 351.

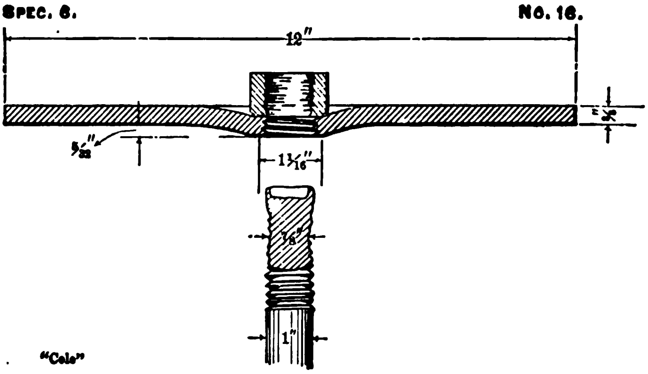

Fig. 352.

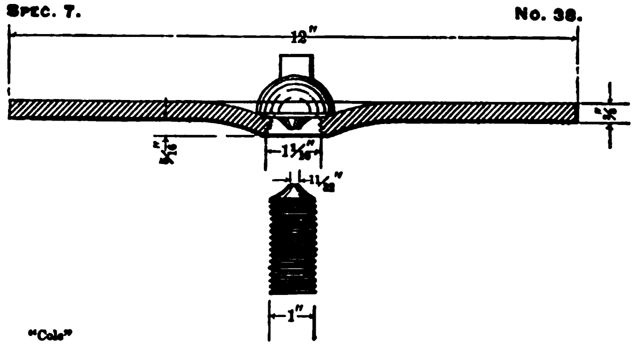

FIG. 353.

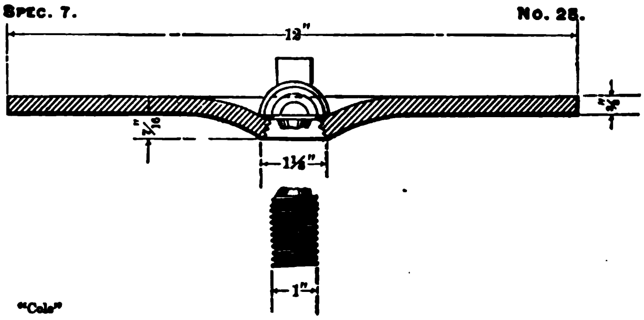

FIG. 354.

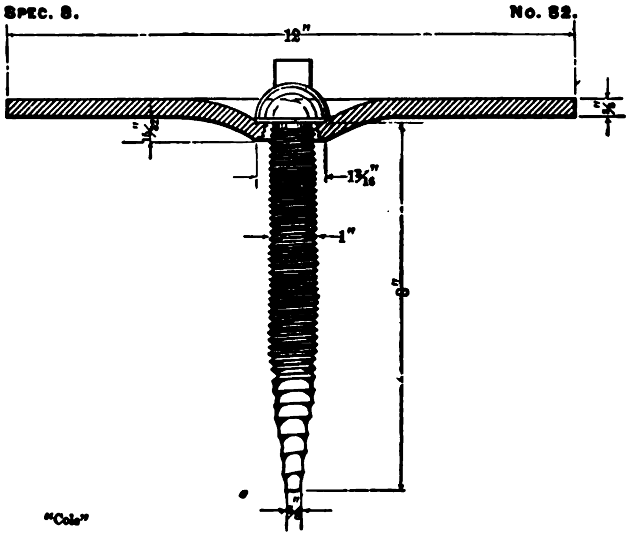

FIG. 355.

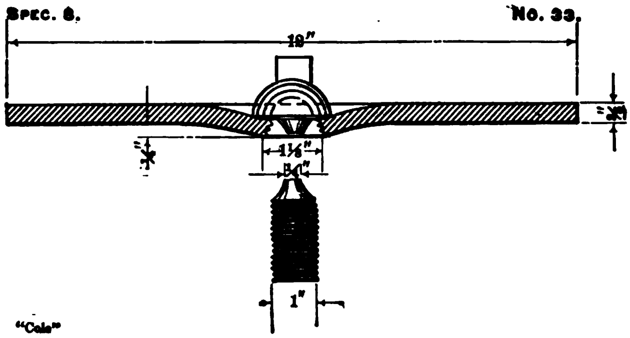

FIG. 356.

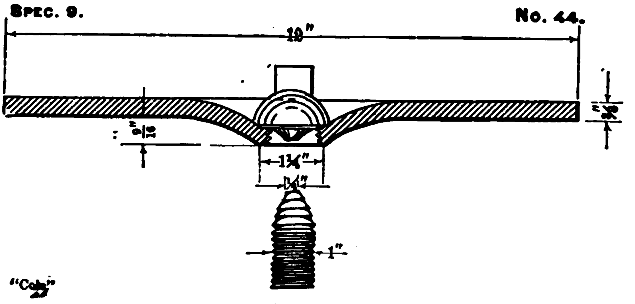

FIG. 357.

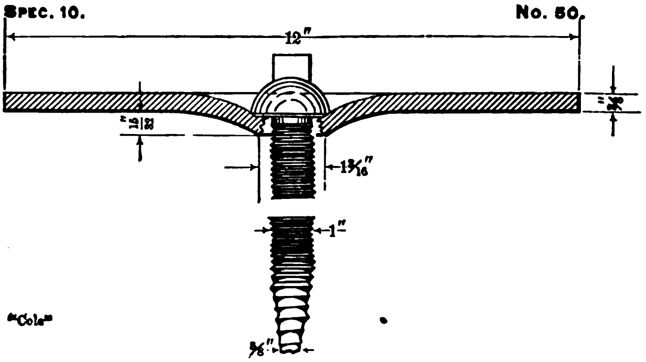

FIG. 358.

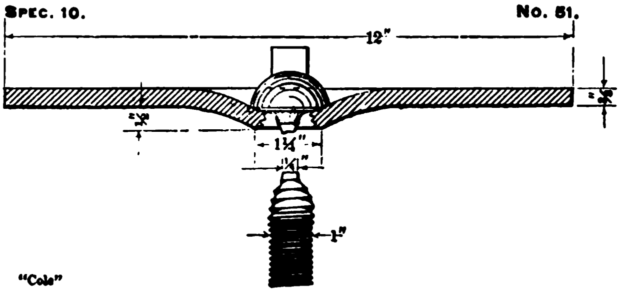

Fig. 359.

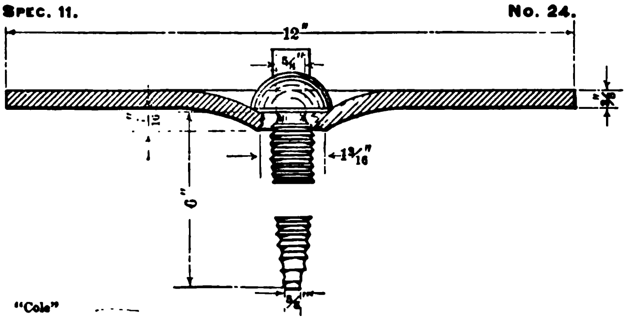

Fig. 360.

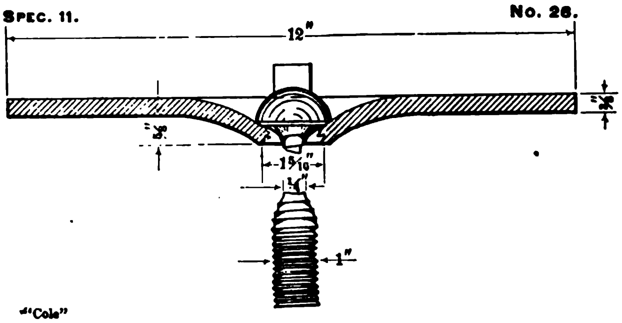

Fig. 361.

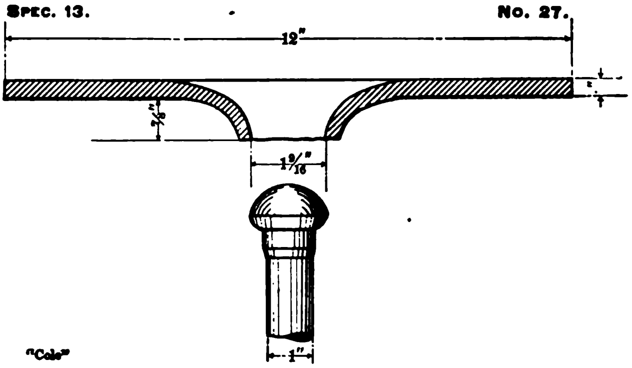

FIG. 865.

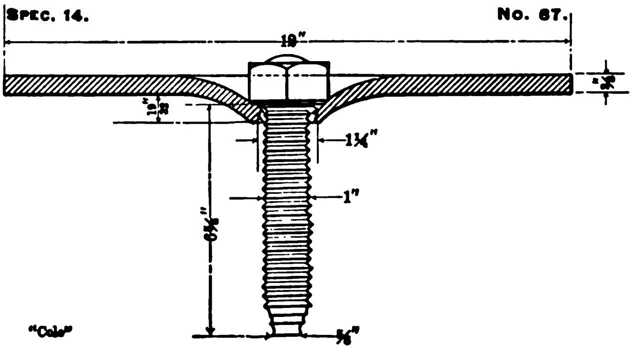

FIG. 866.

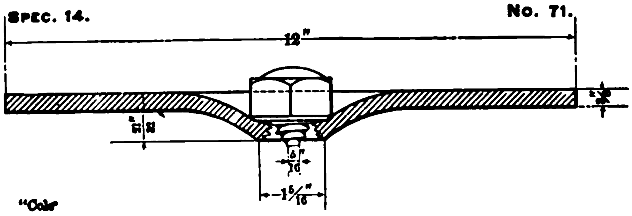

FIG. 867.

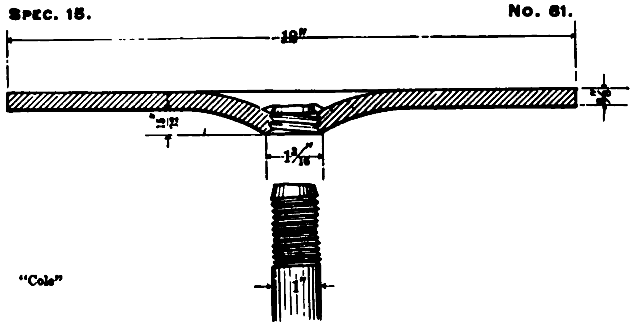

FIG. 868.

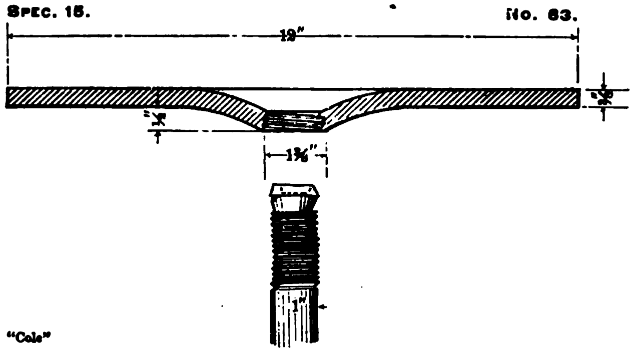

Fig. 369.

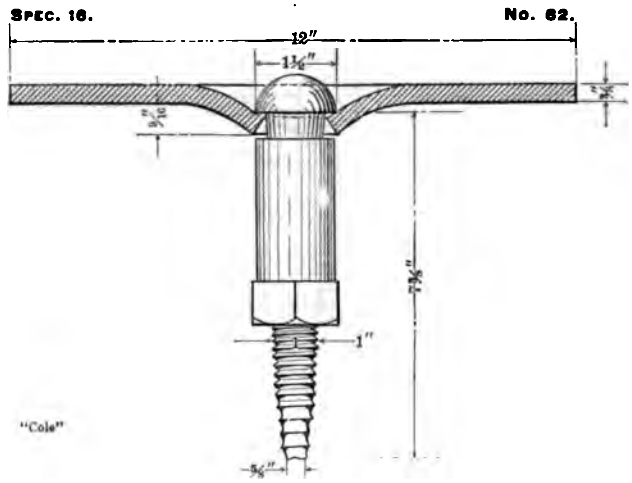

Fig. 370.

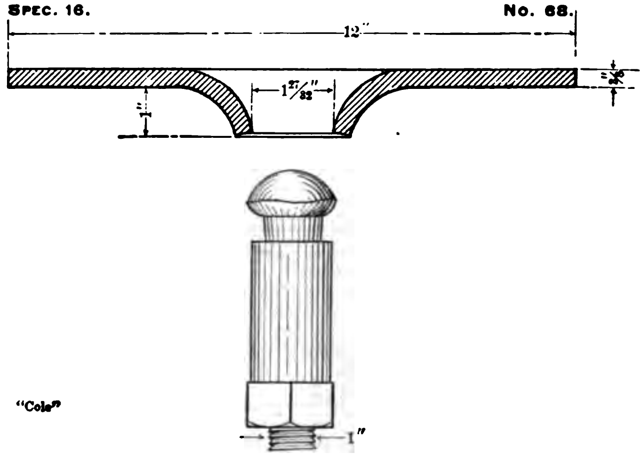

Fig. 371.

DISCUSSION.

Mr. Gus. C. Henning.—It seems almost unnecessary to go into such detail and point out the difference between cold-riveted conical-headed stay bolts and button-headed stay bolts, because if you look into the thing from the point of our general knowledge of the behavior of materials it cannot be otherwise. I have sketched Fig. 372 and Fig. 373. Fig. 373 shows how the metal flows in the head, if there is any flow at all, and the fibres are continuous, running around to the very edge. All of the material is good. If the rivet is to be calked it should be calked a little bit along the sheet at the other end of the rivet. The rivet-heads generally have quite a sharp edge rounded off. But a rivet driven that way ought to be tight without calking. If it is not, there is something wrong with the rivet. The rivet in Fig. 373 shows a very slight flow of metal. To form that rivet all of the material at the lines B and B_1 is crushed and absolutely worthless to resist strain. As long as the fibre is continuous the material has strength. If it is upset by hammering or any other process so that the fibres are not continuous, it practically loses its strength. Therefore it is almost axiomatic that a conically headed rivet driven cold cannot be as strong as the other. Not only that, but the material will wear off more rapidly because it is ruined—it is all hammered; and when metal is hammered long enough, it comes off in flakes. I saw one rivet which a man claimed that he drew through a hole seven-eighths of an inch in diameter, and the rivet was one and

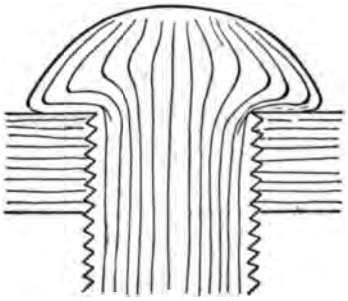

FIG. 372.

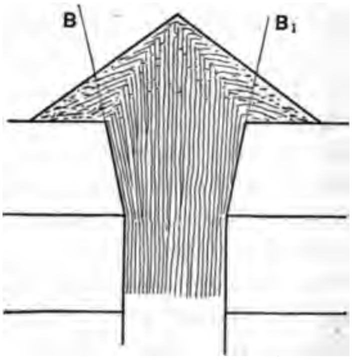

FIG. 373.

one-eighth inches across the head. Figures 369 to 371 of the paper show almost the same thing. You will notice the rivet on the bottom of the page, which is practically pulled through the hole, with the extreme edge broken off. I have seen a rivet pulled through a hole like this, and it was not broken; it looked as if the rivet was sheared down.

Another thing in the paper, page 991: the material is characterized as having a tensile strength of 58,390 pounds and an elastic limit of 38,900 pounds. Now, for boiler steel this is certainly very poor material, because the elastic limit is so high above what it ought to be, and with an elongation of 30.25 per cent in 8 inches. The elastic limit, I have no hesitation in saying, would not exceed about 32,000 or 33,000 when properly tested. I think the yield point, or a load beyond the yield point at which the machine allowed him to observe it, is meant. In the discussion on another paper I will point this out, and show diagrams where it is clearly recognized that such an elastic limit as 38,900 is a myth.

In the next paragraph there is a tensile strength of 59,150 and an elastic limit of 28,800—10,000 pounds less than the previous one given. Now, if the first was stay-bolt iron the second is not. I don't know of any material that has a strength of practically 60,000 and an elastic limit of 28,800, unless it has been soaked—that is, overheated, or ruined otherwise. It is not stay-bolt iron. Nor is the boiler plate which is there mentioned characterized as boiler plate by these tests. An elongation of 31.75 per cent. in 4 inches is given. That would correspond to 23.9 in 8 inches. The next test is almost exactly like it—tensile strength 58,400 and elastic limit 28,040—and it can be shown that an elastic limit of 28,040 is absolutely impossible. There is no such metal, especially in three-eighths plate; and the elongation of 28 per cent. in 4 inches, which is 22 per cent. in 8 inches—I don't think a statement of that sort ought to go unchallenged in a paper before the Society; therefore I call attention to it.

Mr. James Hartness.—There is another point, perhaps, regarding the holding of stay bolts, which it is well to mention, and that is the screw thread and length of lead compared with that of the tap which produced the thread. This becomes of considerable importance in placing a stay bolt in an old boiler. If the tap has a lead which is $\frac{1}{32}$ short in, perhaps, 6 inches, and the bolt a lead which is $\frac{1}{32}$ long in 6 inches, you can see readily that that will do almost no good except to stop up the holes caused by removing the leaky stay bolt; and to overcome that I have recommended the use of tandem dies, one die placed directly forward of the other, and located, as to lead, to correspond with the lead of the taps which are used.

*Mr. Francis J. Cole.**—From the remarks of Mr. Henning it is apparent that he has not read the paper so carefully as to distinguish the difference between screw stays riveted cold with small heads and those with button heads formed hot by upsetting in a bolt-heading machine.

It is customary to rivet over the ends of screw stays to make them steam-tight, the work necessarily being performed cold. The threads are mostly depended upon for holding power in the sheets. It is, however, a disputed point among practical men to what extent the size of the head, when riveted cold, increases the holding power. The average of the tests shows that the increase between the crown stays just riveted over enough to make them steam-tight and those with the largest conical heads which could be formed was 1,143 pounds hot and 7,650 ponnds cold, or about 83 and 47 per cent. increase, respectively. Again, all the stays with conical heads were screwed into the sheets, and the varying sizes of these heads were only a secondary factor in their holding power, the screw threads affording the major part of the resistance.

In specimens 13 and 16 only there is no thread, the button heads of the bolts which were upset in a machine being relied upon entirely to prevent them pulling out of the sheet, except in Fig. 332, where the taper affords a slight resistance. In the discussion, Figs. 372 and 373 show rivets driven in taper holes with conical and button heads without threads, the heads apparently being formed after inserting the rivets in the sheets. These figures do not represent the forms given in the paper, and it is therefore unnecessary to enlarge further upon this part of the discussion. The object of the tests was to ascertain the relative strength of different forms of crown stays, not rivets, with various forms of heads and depths of grooves and their holding power, both hot and cold.

Wrought iron is almost universally used for all crown and screw stays in locomotive boilers. Mild steel, in spite of its great ductility and toughness, is still considered not so reliable, on ac-

---

* Author's closure, under the Rules.

count of its tendency to crack when grooved or nicked—as in the root of screw threads, etc.—although this characteristic would not materially influence the results of these tests. A sufficient amount of one kind of first-class iron was not on hand at the time the tests were commenced; therefore mild steel was used in its place. While the tensile strength was somewhat higher, it was not considered enough to influence greatly the comparative results. The three-eighths boiler steel was first-class material. The elastic limits were merely given because they were observed and recorded, not from any particular significance in relation to the tests. In specifications for boiler steel issued by many prominent railroads in this country, no mention is made of the elastic limit, the elongation, tensile strength. Cold and quenching bending tests and chemical composition are judged sufficient to guarantee the quality of the metal. As the elastic limit depends so much upon the reduction of the billet or ingot, the number of passes through the rolls and the heat when finishing, it is not usually observed for mild boiler steel. Moreover, as sheets which have been flanged are annealed, any high elastic limit caused by rolling at low temperature is neutralized and reduced to a normal condition. The elastic limit here given is the commercial one in universal use in most rolling mills—namely, that observed by the drop of the beam.

It would be out of place at this time and foreign to the tenor of the paper to enter into any extended discussion of what constitutes good boiler material. The following tests of steel boiler plates made by different observers and of various makes will show that the elastic limit, or what is usually known as such, of mild steel, does not bear an exact relation to the ultimate strength, but depends largely upon the mechanical treatment which the material receives.

Size.	Ultimate strength.	Elastic limit	Elongation in 8 in.
.40 x 1.5	51,616	26,333	32.50
.318 x 1.49	52,722	35,880	26.25
.335 x 1.48	56,358	36,304	26.87
.329 x 1.49	54,651	34,067	23.25
.390 x 1.50	57,923	28,205	26.62
1.56 x .367	50,520	31,940	35.00
1.56 x .308	53,420	41,460	28.75
1.52 x .432	50,020	30,280	36.00
1.255 x .573	60,700	43,650	30.25
1.815 x .497	58,790	35,380	29.5

Speaking generally, the elastic limit should not be less than 50 per cent. nor more than 70 per cent. of the ultimate strength for boiler plates where the steel possesses the other necessary qualifications.

DCCXLIV.*

A CONTINUOUS STEAM-ENGINE INDICATOR.

BY THOMAS GRAY, TERRE HAUTE, IND.
(Member of the Society.)

THE instrument described in this paper was devised in the spring of 1892 with the object of obtaining a record of the performance of a gas engine during a series of successive cycles of operation. These records were to be used for the determination of the average indicated horse-power of the engine, and also for the study of the character of the successive explosions when the engine was governing, when the relative supply of air and gas was varied, etc. A somewhat crude form of the instrument was at that time constructed, and was successfully used during a number of tests. The great convenience of this kind of indicator not only for the study of gas-engine performance, but for the testing of all kinds of engines under rapidly varying conditions as to load, etc., was at once apparent, and led to the development of the forms of the instrument here described.

The most important feature of this kind of indicator is the mechanism for producing continuous forward motion of the record sheet by means of the backward and forward motion of the piston of the engine. A continuous uniform motion is of course readily obtained, either from one of the revolving shafts of the engine or from an independent source, and for some purposes is sufficient; but where the card is to be used for anything more than illustrative purposes, and even for that, it is desirable that the rate of motion of the paper should, at all parts of the stroke, bear a constant ratio to that of the piston.

A sketch of one form of the instrument which has been found to give satisfactory results is shown in Fig. 374. On the left of the sketch the cylinder of an ordinary indicator with its recording levers will be recognized. The recording pen is shown in contact with a ribbon of paper, *F*, near its lower edge. This

---

* Presented at the Hartford meeting (May, 1897) of the American Society of Mechanical Engineers, and forming part of Volume XVIII. of the *Transactions*.

ribbon of paper is drawn from a drum *G* (Fig. 375), carried around an idler cylinder at *I*, and wound on a drum *H*. The rate of motion of the paper is controlled by the cylinder *C*, which is driven by the engine in the following manner: The wheel *A* is made to oscillate backwards and forwards through the required arc by means of any of the ordinary reducing-motion arrangements used for taking indicator cards. Cords or metal straps are attached to the upper and lower sides of the wheel *A* and carried in similar directions round the pulleys *BB*, which are fixed to the upper and lower ends of the shaft of the cylinder *C*.

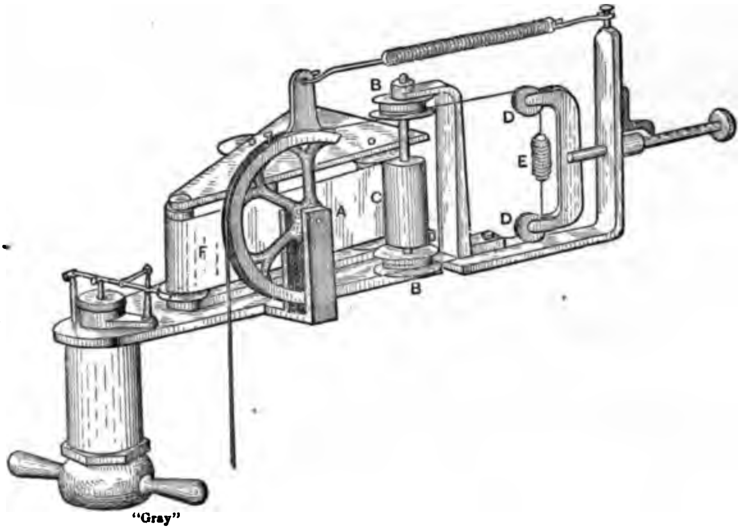

FIG. 374.

The free ends of these cords are then led round the pulleys *D* and connected together through a short spring, *E*. If we now suppose the wheel *A* to be turned in such a direction as to pull the cord towards it round the upper pulley *B*, the tension on the cord between the wheel and the upper pulley will be greater than the tension given by the spring *E*, while the tension on the cord between the wheel and the lower pulley will be less than that given by the spring *E*. The cylinder *C* will, in consequence, be given a clockwise rotation, the lower cord slipping round its pulley and acting the part of a strap brake to prevent excessive movement. When the motion of the wheel *A* is reversed the cord between the lower pulley and the wheel has the greater tension, and thus causes the cylinder *C* to turn. This, however, also gives a clockwise motion to the cylinder *C*, and hence it is clear that both the forward and backward stroke of the engine piston will turn the cylinder *C* in the same direction and at a rate which, at every instant, is proportional to the rate of motion of the piston. The frame which carries the drums *G* and *H* swings round an axis at *I* and is pressed towards the cylinder *C* by a spring. The paper ribbon passes between the drum *H* and the cylinder *C*, and thus when the cylinder is turned the drum is caused to rotate and wind forward the paper. Since the drum *H* is driven through the pressure of *C* on the paper as it comes from the idler *I*, and since *C* turns an equal amount for each stroke, the length of paper which passes the recording pen is also the same for each stroke, no matter how much paper may be stored on the drum.

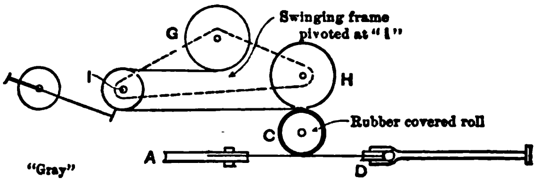

FIG. 875.

The resultant turning moment given by the combined action of the upper and lower cords to the cylinder *C* may be expressed as follows: Suppose the upper cord to be pulled, and let the tension on the side nearest the wheel *A* be *T*, while the tension given by spring *E* is *T'* and that on the lower cord between *B* and *A* is *T''*, then we have $\frac{T}{T'} = \frac{T'}{T''} = e^{\mu\theta}$, where e is the base of the Naperian system of logarithms, μ the coefficient of friction between the cord and the pulley, and θ the angle of lap of the cord in radians. We thus get a forward moment of

$$M = (T - T')\,r = T'r\,(e^{\mu\theta} - 1)$$

and a backward moment of

$$M' = (T' - T'')\,r = T''r\,(e^{\mu\theta} - 1),$$

where r is the radius of either of the pulleys *B*.

Taking the difference of these two moments, we get for the effective turning motive the expressions

$$M - M' = (T + T'' - 2T')\,r = (T' - T'')\,(e^{\mu\theta} - 1)\,r = T''r\,(e^{\mu\theta} - 1)^2$$

This turning moment is evidently always such as to turn the drum in the same direction whether the upper or the lower side of the wheel *A* recedes from the cylinder *C*. The pull T' should always be sufficient to insure that the cord which has to slide should do so without becoming slack; that is to say, T' should be large enough to prevent any accidental sticking of the cord from causing T'' to become zero.

When, under the circumstances just described, a curve is drawn on the ribbon by means of a pen, the height of which above a datum line, corresponding to zero pressure, is proportional to the steam or gas pressure on one side of the piston of the engine, the area of the paper included between the datum line and the curve is proportional to the work done on that side of the piston. This work is positive for the forward stroke and negative for the backward stroke. If the indicator piston and piston rod be properly proportioned to suit those of the engine tested, and the ends of the indicator cylinder be connected to the corresponding ends of the engine cylinder, the ordinates of the curve will at all times be proportional to the effective rate of working. For the study of the action of the working fluid, the effects of different setting of valves, of throttling, of varying speeds, and so forth, the most convenient arrangement is to connect one end of the indicator cylinder to one end of the engine cylinder in the ordinary way. The atmospheric line is drawn by a second pen (not shown in the sketch), which is made to serve the double purpose of drawing a datum line for the diagram and of marking a time scale on the ribbon. The time scale is obtained by attaching the pen to the armature of a small electromagnet, the coil of which is in circuit with a battery and a break-circuit clock. The clock used marks half seconds, and works satisfactorily even when carried on the front of a locomotive drawing an express train.

The paper ribbon on which the record is taken is usually about two inches broad, and is carried on a light brass drum, *G* (Fig. 375), which is prevented from turning too freely by a light friction brake. The paper is passed over the idler *I* for the purpose of presenting a writing surface in a constant position relatively to the pen levers and also for the purpose of allowing the drums *G* and *H* to be placed a short distance from the indicator cylinder. This precaution is advisable in order to prevent escaping steam from wetting the pulleys *B* or overheating the cylinder *C*, which is found to work best when covered with rubber. The drums *G* and *H* are made interchangeable, and provision is made so that they can be quickly removed and interchanged so as to use the paper more than once if desired. A number of drums is provided so that ample paper is available for a number of tests. Each drum carries upwards of 200 feet of ribbon, and hence, allowing two inches to each stroke of the engine, one roll of paper is capable of taking over 1,000 successive strokes.

The method of feeding the paper ribbon adopted in this instrument, requires the cylinder *C* and the drums to be carefully adjusted so as to prevent the paper from travelling towards one end or other of the drum *H*. When the adjustment is once made, however, the apparatus works perfectly. A somewhat more perfect but much more expensive arrangement is to drive the storage drum by clockwork and a spring, while the paper is passed between the cylinder *C* and a second roller. The cylinder *C* then simply controls the motion, and is then somewhat more easily driven. Both of these arrangements give cards of equal length, no matter how much paper is on the drum *H*. When quantitative measurements from the cards are not required the paper may be wound directly on to the cylinder *C*. The cards then increase in length as the amount of paper in the cylinder increases, but this is unimportant in such a case, as the change for successive cards is not noticeable.

Another method of driving the cylinder *C* is indicated in Figs. 376 and 377. Fig. 376 is a plan of the part below *ab* in Fig. 377, and Fig. 377 may be taken as a section on *ab* (Fig. 376) of one end of the shaft and driving mechanism of the cylinder *C* (Fig. 374). In Fig. 377 the driving pulley is shown at *p*. It is in this case loose on the shaft, but carries two pawls, *qq* (Fig. 376). These pawls are pressed by springs against the rim of a shallow cylindrical box which is fixed to the shaft. The pawls are so adjusted that when the pulley turns in one direction (clockwise in the figure), the box, and therefore the cylinder *C*, is turned with it, but when the pulley turns in the opposite direction the pawls simply slip round, while at the same time the cylinder is turned by the pulley on the other end of the shaft. In this arrangement the cords do not slip on the pulleys, but the connection of the pulley to the shaft is such as to slip in one direction and grip in the other. This gives precisely the same action as before, and has the advantage that for the same amount of driving power the frictional resistance is much smaller.

In illustration of the action and application of this indicator two diagrams, Figs. 378 and 379, are here given.

In Fig. 378 is shown a series of cards taken from a locomotive which was drawing the New York and St. Louis express. The engine starts from rest at Greencastle Junction, and attains on an up grade a speed of about forty miles an hour. All the cards are shown until the engine acquires a speed of sixty-six revolutions per minute, after which the cards change very little. Samples of cards, with the number of the revolutions of the engine, reckoned from the start, and the corresponding speed, are given in the last column. From the print here illustrated to the end of the record the speed varied between 210 and 200 revolutions per minute. The engine therefore attained full speed in about 330 revolutions, or in approximately one-mile run.

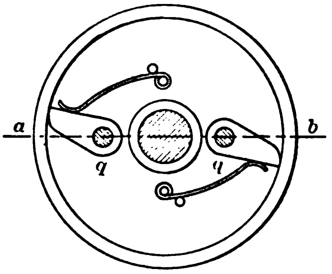

FIG. 376.

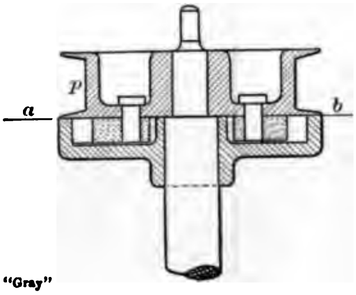

FIG. 377.

Fig. 379 is a sample of the results obtained from the high-pressure cylinder of a 250-horse-power Westinghouse compound engine while driving, in parallel with another engine, the Terre Haute street railway plant. A few of the cards have the compression-half dotted back so as to show the work area of the card. The series of cards is continuous, the speed of the engine being approximately 250 revolutions per minute. The cross marks on the datum line show points one second apart in the record. It will be noticed that the engine passes from nearly full load to near zero load in about two seconds at one part of the record. This gives a good illustration of the highly variable condition as to load under which such power plants have to operate. It should be stated that so great and sudden a variation was not again observed, but conditions approaching these are not rare.

To help interpretation of the record, attention may be called to the fact that a loop in the ordinary indicator card forms a forward step in these cards. This is indicated in the cards, which are dotted back in the diagram given.

DISCUSSION.

Mr. Albert A. Cary.—Mr. Gray's paper has been one of no small interest to me, recalling, as it does, a number of experiments in which I have endeavored to secure a series of indicator diagrams in as close succession as possible in order to catch readings of extreme variations of load, as well as to determine what the true average load really was. At one time I used three interchangeable paper drums for my indicator, keeping an assistant at work taking off and putting on new cards; but this proved

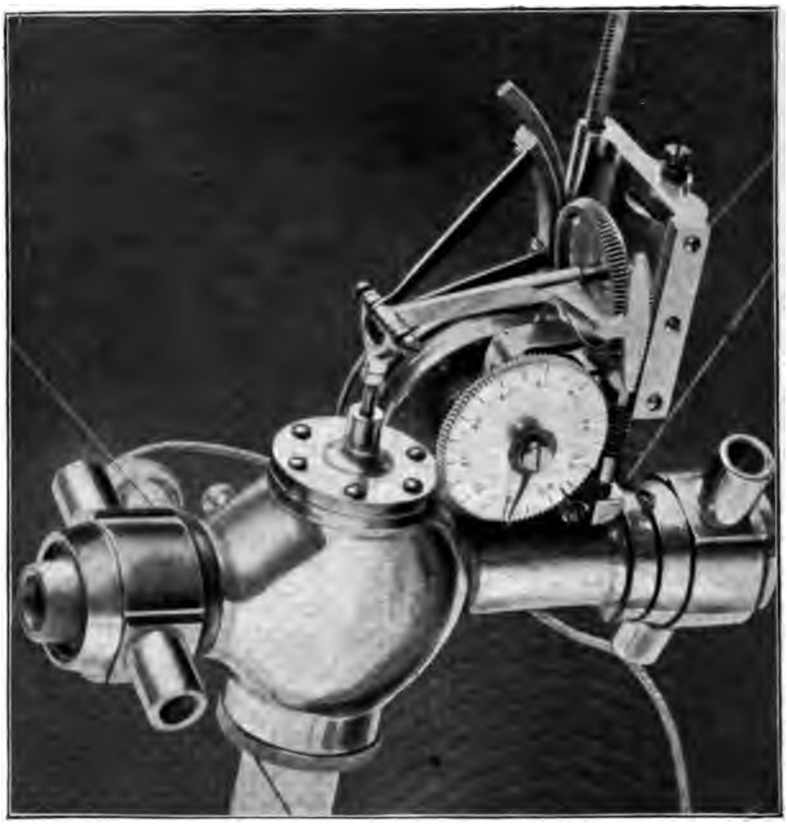

FIG. 380.

to the fact that a loop in the ordinary indicator card forms a forward step in these cards. This is indicated in the cards, which are dotted back in the diagram given.

DISCUSSION.

Mr. Albert A. Cary.—Mr. Gray's paper has been one of no small interest to me, recalling, as it does, a number of experiments in which I have endeavored to secure a series of indicator diagrams in as close succession as possible in order to catch readings of extreme variations of load, as well as to determine what the true average load really was. At one time I used three interchangeable paper drums for my indicator, keeping an assistant at work taking off and putting on new cards; but this proved

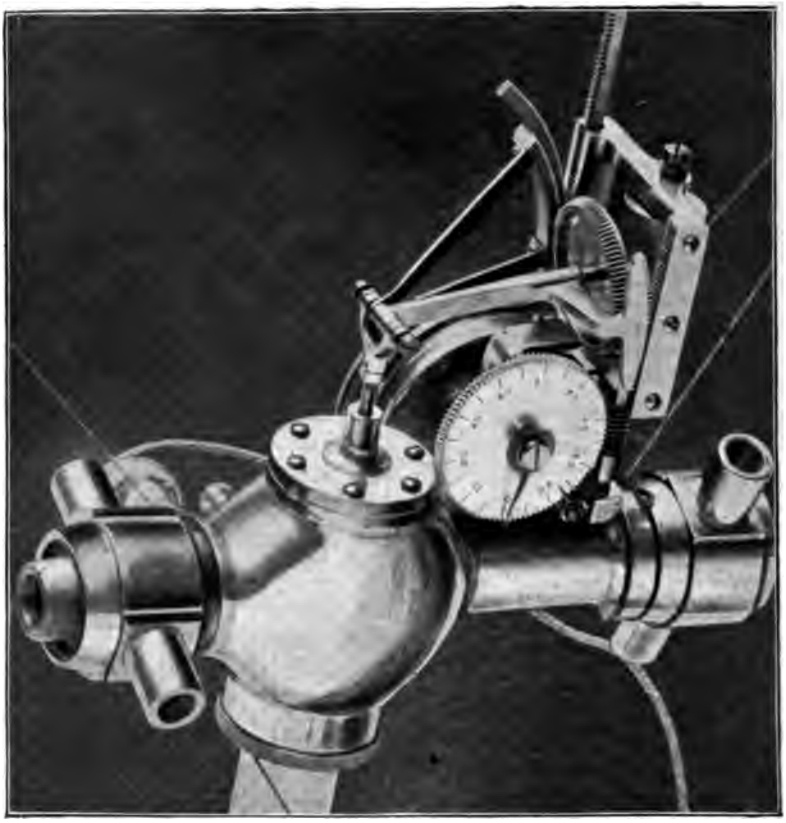

FIG. 380.

far from satisfactory, as I often missed important "peak loads" by being unavoidably a moment too late. A few days ago, after receiving a copy of Mr. Gray's paper, I learned of another continuous steam-engine indicator, recording automatically the amount of work actually done by any engine to which it might be applied. I called on the manufacturers (Messrs. Schaeffer & Budenburg), and they very kindly offered me an instrument to exhibit in my discussion of Mr. Gray's paper, which instrument I am pleased to place before you (Fig. 380). This was invented by Mr. W. O. Amsler, of Pittsburg, who started out with the assumption that such an instrument should have its friction reduced to a minimum for the sake of accuracy in results, and also to reduce the wear of the integrating surfaces, and, further, that it should be as light as possible for easy transportation.

This instrument is constructed to record the work done in the engine cylinder at each stroke; and, as it is in continuous operation, it adds the successive results thus obtained and shows them plainly upon the indicator dial from which readings are taken. The kinematics of the method adopted in this instrument differ materially from anything I have seen, and, believing that it will also be new to the members of this Society, I have taken the liberty of introducing it to your attention. The principle of operation can be understood by referring to Figs. 381 and 382.

In a regular indicator diagram we have two motions recorded, one of which is obtained through the reducing motion, which is proportional to the motion of the engine piston, while the other is produced by the varying pressure in the cylinder, which causes the indicator piston to rise and fall in a line at right angles to the first motion described. The diagram produced by these two motions shows either one or the other of these motions acting separately, or else a resultant of both when both are operating at the same time. Although these two motions are not recorded on a paper in this instrument, as is the case with Mr. Gray's instrument, they are recorded just as positively through the medium of a revolving cylinder, and in such a manner that it is possible to tell the actual amount of work that has been done by the engine during an extended period of time, and this without the trouble of integrating and working up a large number of cards.

The Amsler continuous-work indicator consists, first, of a vertical rotating cylinder turning around the axis *de* (Fig. 381); and as this cylinder rotates in the direction of the hands of a

Fig. 381.

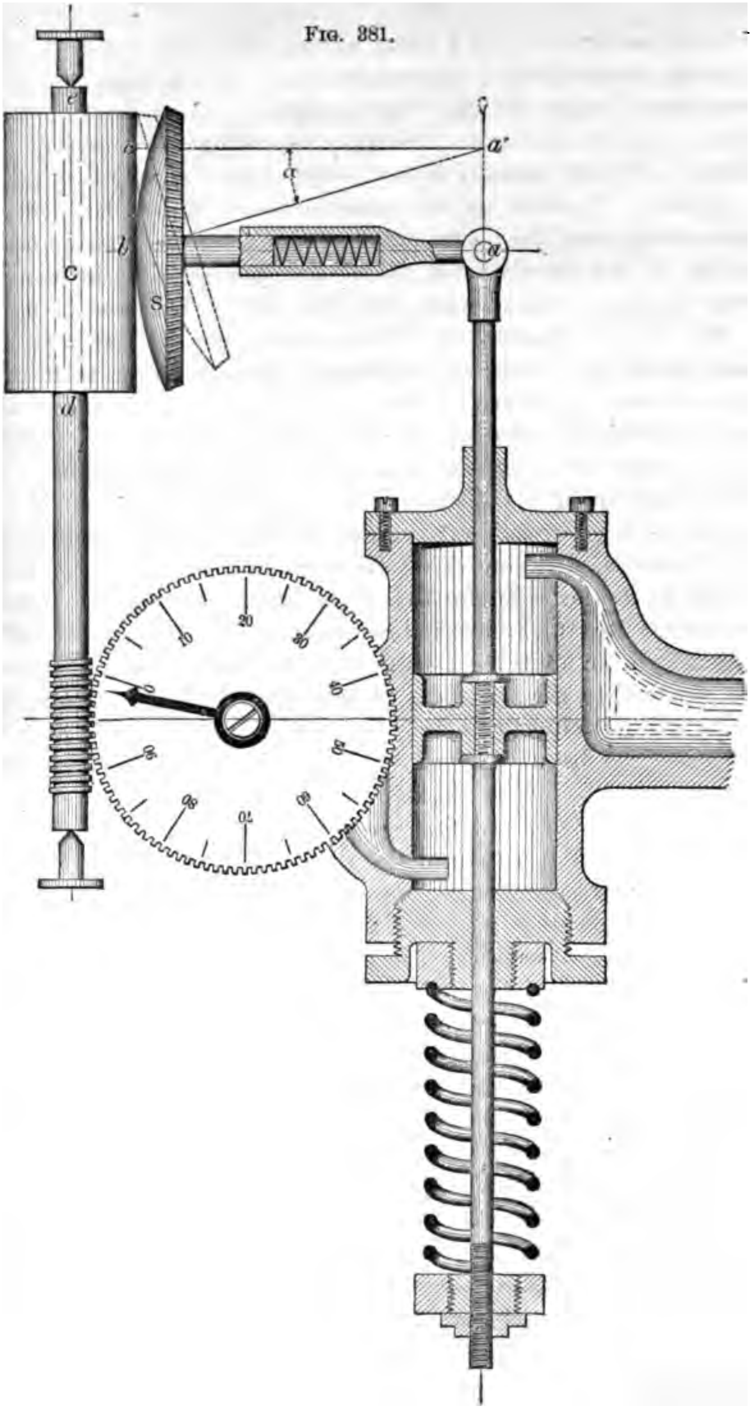

watch, its number of revolutions is recorded through a worm gearing on the recording dial which is placed beneath it. It

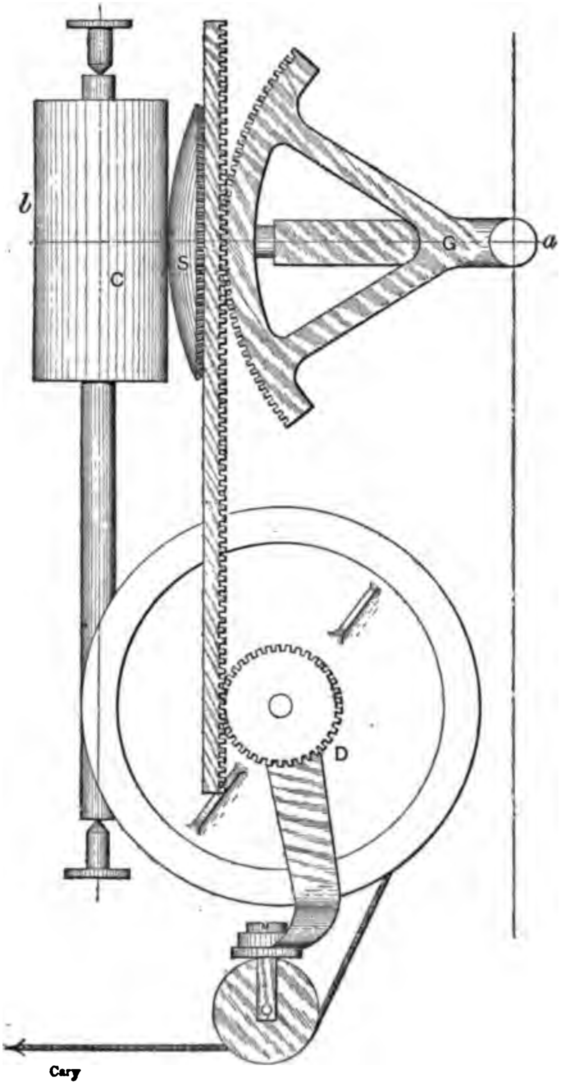

FIG. 382.

will be noticed that the rotating cylinder always turns in the same direction, thus constantly adding the total number of degrees passed through each time it is set in motion. We will now trace the source of motion for this rotating cylinder, remembering that its motion must correspond to a resultant of the two motions, which are the same as those occurring in the regular steam-engine indicator, such as has just been described. Bearing against the rotating cylinder a spherical segment *S* is found, the centre of which is at *a*. The line *ab* shows an axis of rotation, around which this spherical segment revolves.

When this axis *ab* is at right angles to the axis *de*, the revolving sphere produces no motion in the vertical cylinder; but when the axis of the sphere is moved from this position, as shown in the dotted lines *a'b*, motion must be imparted to the cylinder *C*, as the sphere revolves around *a'b* in contact with the cylinder *C*.

It will be seen that the angular distance travelled by the cylinder *C* will depend entirely upon the position of the centre (*a*) of the spherical segment, providing the spherical segment *S* is rotated continuously backward and forward, through the same number of degrees, each time, around its axis *ab*. The distance travelled by the cylinder *C* is measured by the diameter of the circle whose radius is (as shown by the dotted lines) *bc*, which is a function of the distance *aa'*. This diameter is, of course, the sine of the angle *a*.

It is evident that the path of the centre *a*, with the sphere rocking on the straight cylinder *C*, will be a straight line parallel to *de*, providing the lines *de* and *ab* remain in the same plane. If, therefore, we connect a piston rod from a piston which is acted upon, one side by the steam pressure from one end of the engine cylinder, and the other side acted upon by the steam pressure from the other end of the engine cylinder, and if the end of this piston rod is connected to the point *a* in such a manner that the centre line of the piston and rod is parallel to the line *de*, the motion of the point *a* will be proportional to the difference of pressure in the two ends of the engine cylinder. Evidently this difference of pressure is the only pressure tending to do work.

It is now almost unnecessary for me to state that the greater the difference of pressure between the two ends of the engine cylinder, or the higher the initial pressure used, the greater will be the angle through which the cylinder *C* will be rotated during one stroke of the piston.

We now have a measure of the useful effect of the force applied, and it only remains to measure the distance through which this force travels. This is obtained directly from the regular reducing motion usually applied to the cross-head of the engine or to some other reciprocating part moving with the engine's piston. From the reducing-motion device the connecting cord is attached to the drum *D* (Fig. 382), containing the usual reacting spring.

As this drum revolves, first in one direction and then in the reverse, it communicates its motion by means of a vertical rack to a segmental gear *G*, which in turn communicates its motion, by means of an attached rack and bevel gear, to the spherical segment *S*, causing it to revolve around its axis *ab*.

The effect of the rotation is nil when the axis of this spherical segment is along the line *ab* (Fig. 381), and then, of course, the pressure on the top and bottom of the indicator piston is equal and no work is being done; but as the axis of this spherical segment is changed, as shown by the dotted lines (Fig. 381) with the axis at *a'*, *b*, the effect of the rotative motion from the reducing motion is to cause the cylinder *C* to rotate through an angle proportionate to the position of the centre *a* above or below the line *ab*.

I have omitted to state that regular indicator springs are applied to the lower end of the piston rod, so as to govern the motion of the indicator piston in the regular way.

From the preceding description it will be understood how the two motions of the indicator have been reduced to a single resultant; and now it only becomes necessary to learn the nature of the curve produced, assuming it to be plotted on coördinates, in order to be able to interpret the results read off from the indicator dial.

This curve may be obtained by direct calculation after the dimensions of the instrument are known, and also the movement of the piston per unit of pressure, or else it may be plotted from the results of a direct calibration of the instrument which is applied to an engine cylinder at the same time that two indicators of the regular well-known patterns are in use. In the latter case periodic readings are taken from the work indicator, which are compared with the indicator diagrams taken during the same period.

Fig. 383 shows curves which are plotted in both of the above-described manners. The difference between the "actual curve" and "theoretical curve" is doubtless due to an inaccuracy in the spring used, which was afterwards discovered. This calibration was made by the use of a Corliss engine. The elbows connecting

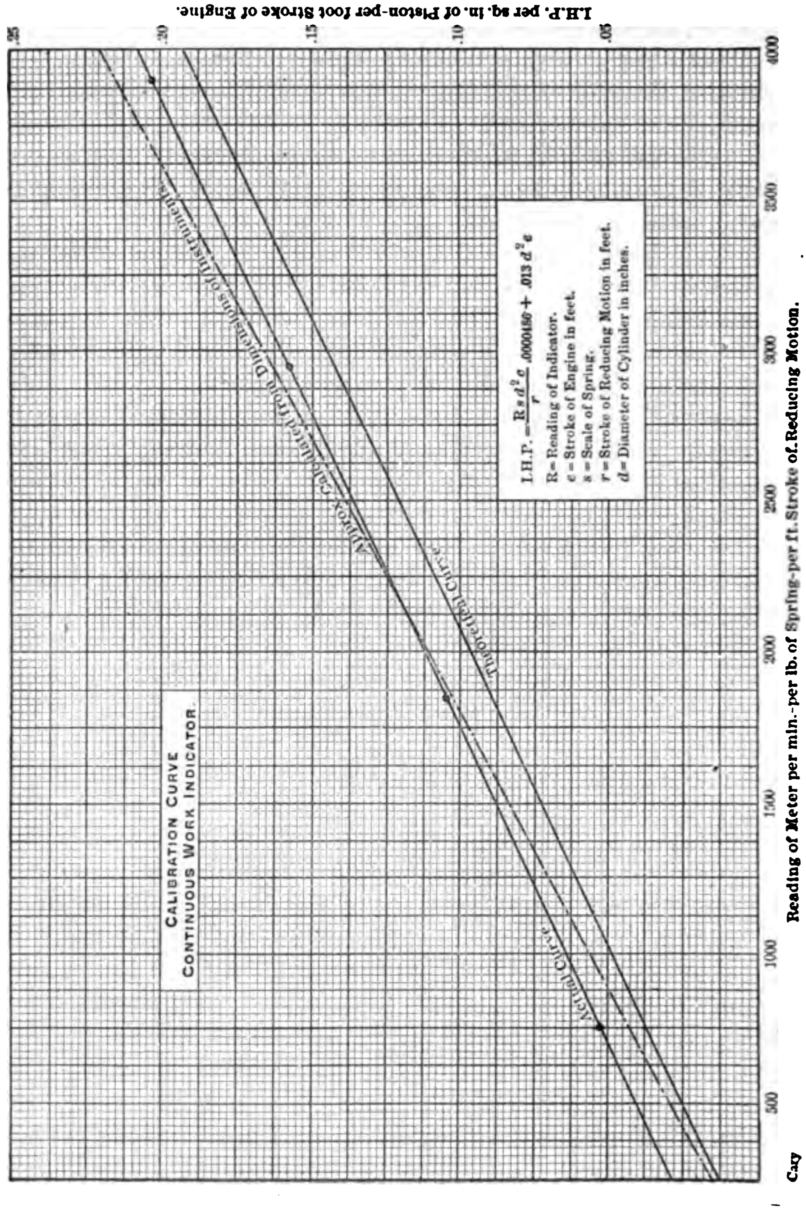
CALIBRATION CURVE
CONTINUOUS WORK INDICATOR.
I.H.P. per sq. in. of Piston-per foot Stroke of Engine.
.25
.20
.15
.10
.05
Reading of Meter per min.-per lb. of Spring-per ft. Stroke of Reducing Motion.
500
1000
1500
2000
2500
3000
3500
4000
Approx. Calculated from Dimensions of Instrument.
Theoretical Curve.
Actual Curve.
I.H.P. = $\frac{Rsd^2e}{r}$ .0000486 + .013 d^2e
R = Reading of Indicator.
e = Stroke of Engine in feet.
s = Scale of Spring.
r = Stroke of Reducing Motion in feet.
d = Diameter of Cylinder in inches.
Cary

FIG. 888.

the regular indicators to the cylinder were replaced by tees, the regular indicator connections being then made from one branch and the connection to the continuous work indicator from the other. The same reducing motion was used for all the indicators. Four one-hour runs were made, the loads on the brakes being respectively 200, 300, 400, and 500 pounds. Readings for indicated horse-power and of the continuous indicators were made every five minutes. The results of these observations are shown by the "actual curve." This curve, when plotted, proved to be a simple straight line. The theoretical curve was drawn parallel to the actual, but through the origin.

It will be seen that the abscissas show the readings of the meter per minute per pound of spring per foot of stroke of reducing motion, while the ordinates give us the indicated horse-power per square inch of piston per foot of stroke of engine.

The result obtained from this instrument is simply the total work done by the engine during the period of its application. By examining the dial from which readings are taken it will be seen that the worm drives two gears having 100 and 101 teeth respectively, and by this method of differential gearing ten thousand revolutions of the vertical cylinder *C* are reported before repeating. By this means a comparatively long run (of several hours) can be made, and by taking readings two or three times a day, an all day's test can easily be made. A very simple device can be added to this recording dial which will make several days' run without readings possible.

Prof. D. S. Jacobus.—The instrument just described by Mr. Cary will be very useful for a certain class of testing work. In tests of electric power stations where the load is variable we can obtain the electrical output by means of a wattmeter much more accurately than we can the indicated power of the steam engine if we indicate the engine in the ordinary way, so that the continuous indicator would be very useful where the ratio of the electrical output to the indicated power is to be determined. The instrument would also be useful in tests of a gas engine where the power varies a great deal during the successive strokes. The instrument presented by Professor Gray is capable, however, of being used in some cases where the one just described by Mr. Cary would not give the desired results. For example, two students of our class of 1896 selected as the subject of their graduating thesis the test of a Ward-Leonard elevator, and they wished to obtain the power required by the elevator from the beginning of its travel until it reached the top of the building, including the power at the intermediate stops. In the elevator which they tested the engine acted as a brake when a stop was made, so that for a short interval there was a minus load on the engine. They found the horse-power for all conditions of running of the elevator, including the minus or retarding power at each stop, which could not have been done with the instrument just described by Mr. Cary, on account of the shortness of the time during which the record was taken.

The continuous indicator used by our students was arranged so that the paper passed along at a fixed rate of speed; that is, it was made to travel in a certain ratio to the fly-wheel speed. The diagram was worked up by ordinates. Of course this took considerable time, but since then I have devised a planimeter which can be used to obtain the rectified area directly. We found one difficulty in using the continuous indicator: The indicator would trace a very accurate curve, but we had to mark the zero points of the curve; that is, we had to mark the dead-centre points exactly, and in this one particular the indicator was defective. Electric magnets were arranged in which the current was broken at the dead centres, but the lag of these magnets amounted to over one-sixteenth of an inch of movement of the paper. In the indicator devised by Professor Gray we have to measure a plus area and then a minus area, and to do this we have to know where to start and stop. I should think that there ought to be an arrangement for marking the dead centre positions, unless by the stopping of the drum at the end of each stroke the pencil of itself makes some sort of a mark which can be distinguished.

I would like to ask Professor Gray what means he has of determining where to start and stop in measuring the forward and the back pressure areas.

Mr. H. H. Suplee.—As a contribution to the history of this subject only, it may be interesting to look up the old indicators. General Morin, the celebrated French experimenter, had a continuous indicator on his engine at Metz sometime in the early forties which gave a continuous, not intermittent diagram.* Ten or fifteen years later Sir Daniel Gooch, the British locomotive

---

* A. Morin: *Notions fondimentales et données d'experience.*

builder, had a very ingenious continuous indicator, which is described in Clark's *Railway Machinery.* The paper was moved by the locomotive shaft; and the indicator was made with an elliptical spring instead of the modern spiral spring, using a short stroke and a stiff spring in order to get rid of the excessive vibrations of the old McNaught indicator of the day. He used a lever to multiply the movement, the motion of the pencil being in an arc, giving a diagram in curved ordinates, which had to be translated; because, in the first place, it was continuous while the piston motion was variable, and, in the second place, it was on a curved system of coördinates. A continuous integrating indicator was also made by Professor Moseley sometime about 1850.

Professor Gray.—With reference to Mr. Jacobus's question, the plan I have usually adopted is to take a card by means of an ordinary indicator and compare. There is not usually any great difficulty in determining the end of the card when the paper comes to rest at the end of the stroke. For greater accuracy than that obtained by comparison with the ordinary card, it may be well to mark some definite point in the stroke—say, the middle of it—which may be done either mechanically or by an electric contact actuating some recording device. In most of the work for which I have used the indicator the object has been to study the action of valves, the effect of different mixtures of gas in the gas engine, and so forth, and hence the shape of the card was of greatest importance. Where we want accurate knowledge as to the end or any other point of the stroke, it can be readily obtained in the manner just indicated.

In regard to the very ingenious instrument described by Mr. Cary, I may say that it belongs to a different class from that which I have described, and I should like to state that in a number of the locomotive tests from which I took the sample diagram given in the paper, the work done during some thousands of miles of run was integrated out by an apparatus for the same purpose. The continuous-card indicator formed only a part of the apparatus used; another instrument was used to integrate the total work done during the entire run. The integrating indicator which was used in these tests is of simpler construction than that just described by Mr. Cary. It was designed by Prof. C. S. Brown, and is similar to the energy meter devised by Professor Boys of London some sixteen or seventeen years ago. The most important parts of the instrument (Fig. 384) are a small drum *D*, a wheel *W*, and a counter *C*.

The drum *D* is moved, parallel to its axis, backwards and forward through an inch or less by means of an attachment to the piston of the engine. At the same time the wheel *W* has its

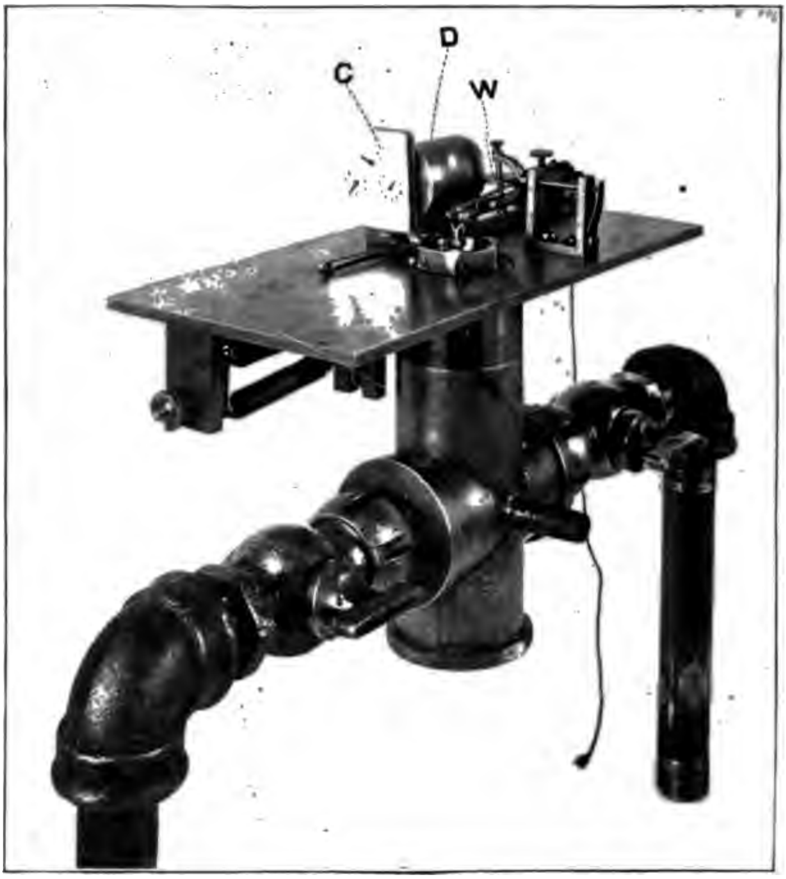

FIG. 384.

plane (which is normally nearly parallel to the axis of the drum) turned through an angle proportional to the difference of the steam pressure on the two sides of the engine piston by means of an indicator piston which is connected to a short arm fixed to the frame in which the wheel turns. As the drum moves backwards and forwards the wheel *W* causes it to revolve round its axis by an amount proportional to the product of the inclination of the wheel and the stroke of the drum. The number of revolutions of the drum as shown by the counter is thus proportional to the work done by the engine.

The beauty of this little instrument is, in the first place, its cheapness. It is very easy to make. In the second place, it gives very accurate results. The amount of resistance which the drum is able to overcome is perfectly surprising when the wheel W is in hard contact with it. We standardized these instruments—of which we have several—when the drum had a polished metal surface, lubricated surface, paper-covered surface, etc.—and did not find the slightest variation, using, of course, a mechanism for driving which gave a definite area at each stroke. Another point about this is that the exact setting of the arm is not important. The deflection from the zero is all that is wanted. There is no error produced by the wheel not being set exactly on the diametral plane of the drum. Such instruments are of very great use for purposes such as have been called attention to. I do not intend, in the case of a long run, to use the continuous indicator to obtain the total work. It is too much trouble. To integrate all those curves would take a man some hundreds of times as long as it would to take the cards. I do not use the continuous card to obtain the work done except in such cases as Professor Jacobus speaks of, where a comparatively small cycle repeats itself.

Prof. John H. Barr.—In regard to the question asked by Professor Jacobus about indicating the beginning of the stroke and the reply by Professor Gray, I understood the latter to say that he prefers marking his diagram at the middle of the stroke. It seems to me that he has a decided advantage over Professor Jacobus in this respect if he chooses to take it, and that it lies in marking his diagram at the *end* of the stroke, because the paper moves with a motion proportional to that of the piston, with an approximate harmonic motion. His paper comes to rest at the end of each stroke, and therefore the error due to the magnetic lag (a time effect) will be a minimum if he marks the diagram at that point. If he marks it in the middle when the velocity is highest his error will be a maximum.

I had occasion to investigate magnetic lag about a year ago in working up a dynamometer for measuring the friction of engine valves in operation. The diagram of this instrument is produced by a pencil under control of a magnet in an electric circuit which is made and broken with each stroke of the engine. The character of the diagrams obtained convinced me that the magnetic lag was serious. To determine the amount of this lag we mounted a paper drum in a lathe, with a contact-piece and brushes so arranged that the pencil made a mark on the paper at every revolution of the drum. A zero reading was taken with the drum at rest; then, from the record made with the drum rotating at a known speed, the magnetic lag was determined. We found by increasing the number of cells of our battery up to eight that we could reduce the lag. With more than eight cells we did not get any appreciable reduction of lag. The minimum lag which we obtained with eight cells was about one-eightieth of a second. On an engine running three hundred revolutions a minute this is very serious. We calibrated our curves and reconstructed them on the basis of the lag as determined in the above manner. One of the students in our laboratory suggested a most ingenious method of getting around this difficulty, and on trying his scheme afterwards we found no appreciable lag. In place of a plain paper and pencil he used the so-called silver paper, or tinsel paper, such as is much in evidence about Christmas time, and clamped one edge with a metallic clamp. A wire passes from that clamp through the battery, and the other end of the wire may come in contact with this paper. No magnet in it at all. If the point of the wire touches the paper the circuit will be closed by the metallic surface of the paper, and this surface will immediately be oxidized, vaporized, at the point of contact. Passing this end of the wire over the paper will leave a mark which is very clear, and on holding it to the light one can see through it. If you make a circle on the paper and then touch a point within the circle, it fails to record because the circuit is broken. This method, doing away with the magnet altogether, enabled us to reduce the lag to a quantity so small that we could not measure it. But it seems to me that if Professor Gray is to indicate the beginning of the stroke by *magnetic* means he has a decided advantage in making that record at the end of the stroke when his paper is at rest, and thus reducing the distance corresponding to the time lag.

Professor Aldrich.—There is one question I would like to ask Professor Gray in relation to the sketch, Fig. 374, page 1021, taken in connection with Fig. 375, page 1022, and the deductions of the formulæ on that page—namely, whether he noticed any considerable slipping action of the cords on the upper and lower pulleys *BB*, the cord itself making one complete turn around the top and bottom pulleys?

Professor Gray.—None at all in the driving end. The only difficulty which comes in the case of a flexible connection is that which we have to contend with in all indicator practice—extensibility of the strap. That, of course, we have to contend with always. But I have run on some fast runs with steel straps, ordinary watch-spring straps, and, beyond the difficulty of heating, we had no trouble and got less stretch than with the cord. To get rid of the stretch between the engine and the drum itself I used a chain of considerable weight, so that the connection is practically rigid. But, as I say, I prefer to use the second method where the straps are replaced by the drum and mechanism, which is practically an infinitely fine ratchet action in that case.

Professor Aldrich.—Then, as I understand Professor Gray, there is no slip to be taken into consideration in connection with the formula on page 1022. This formula is developed on the hypothesis that there is such a slipping action, producing a difference in the tensions of the cords, as is shown by the use of the common formula for the ratio of these tensions; thence the effective turning moment (bottom of page 1022) is developed.

Professor Gray.—No absolute slip is required in order that the forces assumed in the formulæ may be established.

Professor Aldrich.—There is a question I wish to ask Mr. Cary. The Schaeffer & Budenburg Company, of New York, had on the market some years ago a differential indicator—of German invention, I believe. In this the same purpose was effected as in the instrument shown by Mr. Cary, without any attachment for integrating the work done; that is to say, the difference of pressures on each side of the engine piston was simultaneously reproduced on the diagram by introducing these pressures, each on opposite sides of the piston of the indicator. Is it not true that there will be a continuous and quite appreciable loss, vitiating the recorded difference of pressures, when on one side of the indicator piston there is high pressure of the forward stroke, say, and on the other side the back pressure of exhaust, or even the vacuum of the condenser? Will there not be such a loss and therefore a result which is vitiated by the steam leaking past the piston of the indicator?

Mr. Albert A. Cary.—This instrument was placed in my hands but a short time before this meeting, and for that reason I may not be as well prepared to discuss all its points as I would be otherwise.

Concerning the leakage of the piston, I believe that it is generally conceded that an indicator piston should not be tightly fitted, and supposing, in this case, that the usual amount of leakage occurred around the piston; when we compare this volume of escaping steam with the total volume admitted to the indicator cylinder through its comparatively large openings, the error in the results indicated must certainly be too small for practical consideration.

*Professor Gray.**—As Professor Aldrich's question has a bearing on the apparatus I have described I may state that in cases where pressure is taken from both ends of the engine cylinder a double indicator piston is used and the space between the pistons is ventilated. I do not think any error would arise in the way suggested by Professor Aldrich, but the double piston was adopted because it is required when indicating certain kinds of compound engines by means of an integrating indicator.

As to Professor Barr's remarks on the magnetic lag, etc., I agree with him as to the comparative ease of recording the end of the stroke by electromagnetic means. I had not in mind the use of an apparatus of the kind, but even with electromagnetic apparatus the lag can be made inappreciable. One of the least inert arrangements is that used in the Kelvin siphon recorder or the H. A. Benval galvanometer. The electrochemical method is probably the best.

---

* Author's closure, under the Rules.

DCCXLV.*

AN APPARATUS FOR ACCURATELY MEASURING PRESSURES OF TEN THOUSAND POUNDS PER SQUARE INCH AND OVER.

BY D. S. JACOBUS, HOBOKEN, N. J.
(Member of the Society.)

THE apparatus is shown in Fig. 385. The pressure-measuring device consists of a steel plug *A*, half an inch in diameter, fitted into a steel bushing *B*, the hole in which is 0.5005 inch diameter. The top of the plug *A* is fastened to the centre of the wheel *C*. *E* is a steel plate which bears downward on the axis of the wheel *C*. There is a ball bearing *D* between the steel plate and the axis of the wheel. *G* is a circular base for supporting the apparatus.

A pressure is produced by means of a special device, not shown in the sketch. This pressure is transmitted to the measuring device by forcing oil through the one-quarter inch pipe *F*. The oil pressure tends to raise the plug *A*.

The plug-and-wheel device is placed on a pair of platform scales, or in a testing machine arranged for tests of compressive strength, and the downward force *P* required to hold the block *E* in place is accurately measured. To this is added the weight of the wheel *C*, and of the ball-bearing device and plug, and from this total force the liquid pressure is calculated.

The wheel *C* is spun around when the weight *P* is measured, in order to rotate the plug and thus eliminate the effect of friction.

The pipe *F* which transmits the pressure is about sixteen feet long, and bent in the form of a *U*, so that any little displacement of the pressure-producing device will not affect the reading of the platform scales.

If a gauge is to be tested it is attached at *H*. The weight *P* required for a given pressure is calculated, and the scale-beam

---

* Presented at the Hartford meeting (May, 1897) of the American Society of Mechanical Engineers, and forming part of Volume XVIII. of the *Transactions*.

of the platform scales is adjusted so that it will register this weight. The oil pressure is then increased until the beam of the platform scales is raised, the wheel *C* being spun to eliminate the effect of friction, and when the scale beam is balanced the gauge is read. The reading of the gauge for various pressures is thus obtained, and the difference between the readings, and the pressures as measured by the plug, gives the corrections for the gauge.

This apparatus has been employed for calibrating gauges to 10,000 pounds pressure, and for measuring pressures as high as 15,000 pounds per square inch, and has given entire satisfaction

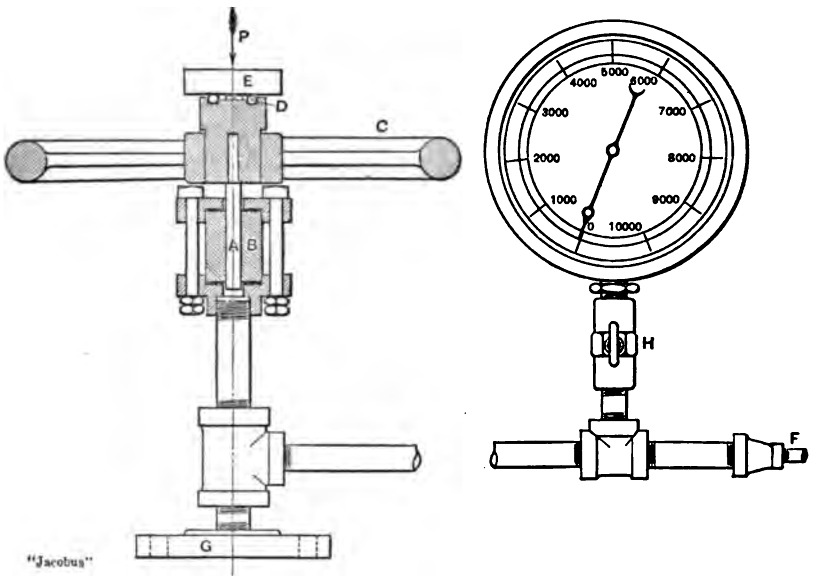

FIG. 385.

DISCUSSION.

Prof. R. C. Carpenter.—We have found an apparatus, quite similar to that described by Professor Jacobus, to be extremely useful not only for very high pressures, but also for pressures of small amount. The writer described two forms of apparatus, working on this principle and applied to the testing of indicator springs, in vol. xv., p. 454, of *Transactions* of American Society of Mechanical Engineers ; cuts of both these forms of apparatus are shown (Figs. 386 and 387). In connection with the use of that apparatus I would say that we have found it quite possible to get a perfectly straight line for the calibration curve from an indicator spring, which has, I believe, been found impracticable with a mercury column.

Previous to this time we had used a similar device, but of considerable more power, in calibrating a hydraulic gauge to 10,000 pounds pressure.

The Yale & Towne Company also employed the same principle, using, however, a diaphragm in place of a piston for calibrating their very large and delicate pressure gauges which were furnished with the Emery testing machine.

The apparatus made by Yale & Towne for calibrating the Emery testing machines was presented by Yale & Towne to Sibley College, and about four years ago this apparatus was used by their superintendent in a manner similar to that described for calibrating a gauge which had been sold with one of their testing machines, through a range of pressure of several thousand pounds. We have also calibrated hydraulic gauges for Schaeffer & Budenberg, of Brooklyn, N. Y., to a pressure of 10,000 pounds in a similar manner.

In looking over the records of the patent office some years ago I discovered that a patent had been issued to George Westinghouse, Jr., for an apparatus working on this principle and for the purpose of calibrating gauges with fluid pressure. The apparatus invented by Mr. Westinghouse showed many ingenious devices for maintaining a constant pressure which could be fixed for any predetermined amount.

Professor Jacobus.[*]—I wish to thank Professor Carpenter for his kind discussion of my paper. The essential difference in the instrument I have described and of others now in use consists in the ball-bearing at the top of the spindle.

We have for a long time employed a device similar to that manufactured by the Crosby Steam Gauge Company for measuring ordinary pressures. In this weights are placed on top of the spindle, and it is rotated in determining the pressure. The apparatus which I described for measuring the steam pressure in a device for calibrating thermometers was of the latter form.[†] We use a similar apparatus in standardizing indicator springs.

We have found that a plug cannot be relied upon for accurate

---

[*] Author's closure, under the Rules.

[†] *Transactions*, vol. xvii., p. 168.

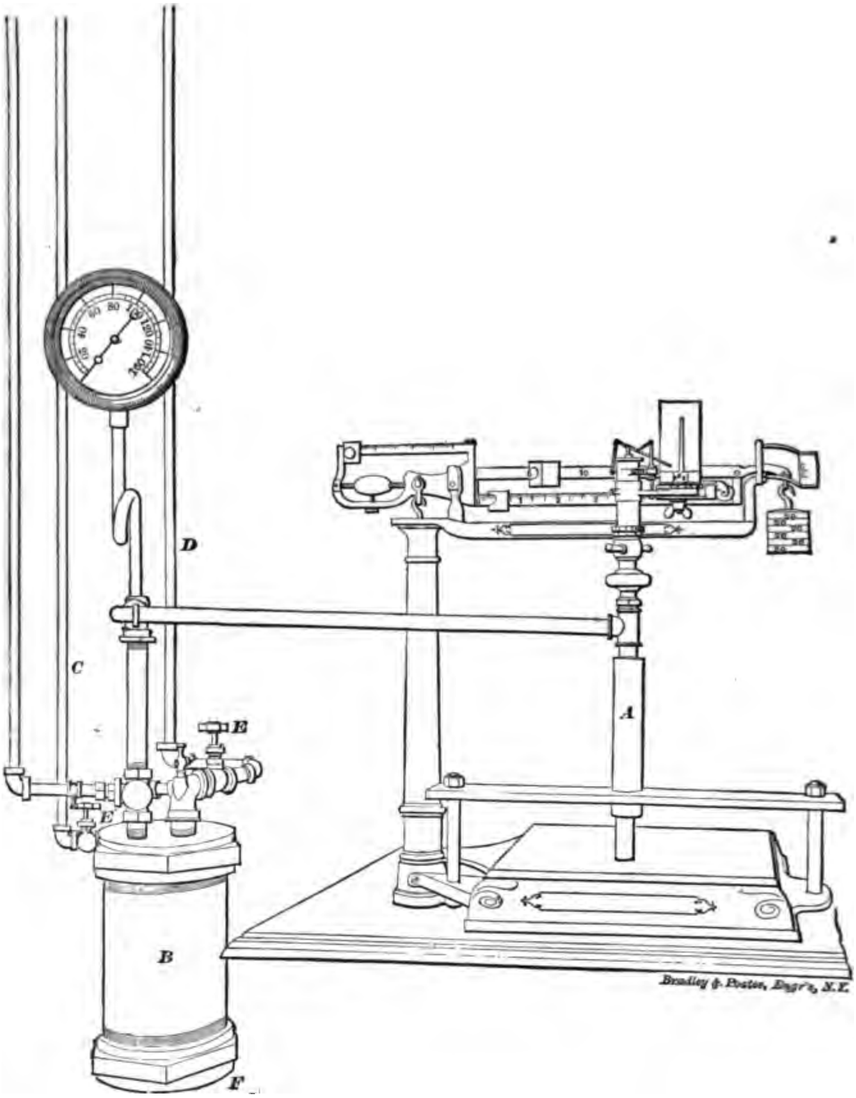

Bradley & Poates, Engr's, N.Y.

FIG. 386.

measurement of pressures unless it is rotated so as to eliminate the effect of friction. With a plug adjusted so as to make an accurate free fit it is difficult to reduce the error due to friction to less than 3 per cent. when the plug is not rotated, and the error may be much greater.

In some testing work it is convenient to produce the pressure by forcing the plug downward, and measure the weight required to force the plug downward in order to estimate the pressure. This method will give results from 5 to 10 per cent. too high

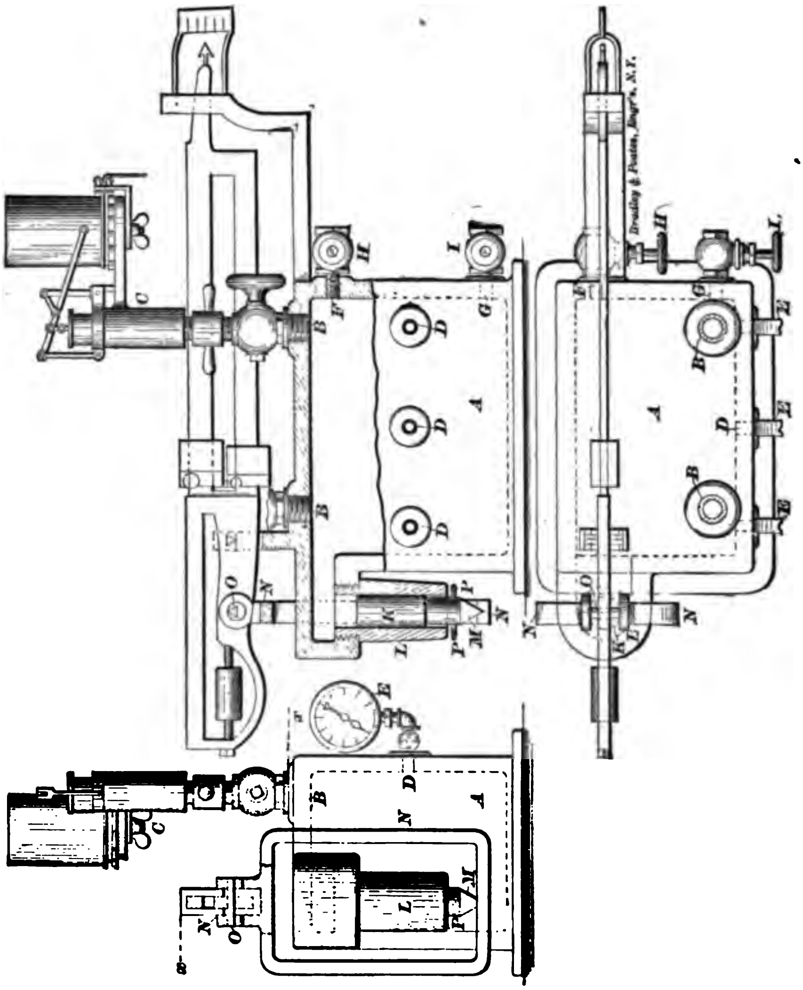

Fig. 387.

with a plug that is a loose fit, and the error may be greater with a plug that is a tight fit.

It is important, therefore, that the plug should be rotated, and it is to accomplish this at extremely high pressures that the apparatus which is the subject of my paper was designed.

An examination of Fig. 385, which represents this apparatus, will show that the plug will rotate freely, even should the plate bearing downward on the ball bearing be sprung to one side or the other by the pressure acting on the plug, because the ball-bearing is free to travel to any position on the hardened steel plate, marked *E*, and it will come to a position which will bring it directly in line with the plug. It is to accomplish this that the ball bearing was made open at the top instead of enclosing the balls in a collar bearing.

In the first apparatus described by Professor Carpenter there does not appear to be any means of rotating the plug, and if this is not done the results will be affected by the error due to friction. In the second apparatus the plug is rotated to a limited extent by means of a rod moved by the hand of the operator when weighing the steam pressure, and I should think there would be a liability of affecting the readings of the scale beam unless great care and skill were employed.

In the weight apparatus which we use for measuring ordinary pressures, the inertia of the weights keeps the plug revolving during the time in which the reading of pressure is taken, so that there can be no error due to carelessness on the part of the operator in rotating the plug. In the apparatus which is the subject of the present paper the pressure of the hand of the operator on the fly-wheel will not affect the readings because it will not alter the force acting downward on the base, which is the force recorded on the scale beam.

DCCXLVI.*

ELECTRICAL POWER-EQUIPMENT FOR GENERAL FACTORY PURPOSES.

BY DUGALD C. JACKSON, MADISON, WIS.
(Member of the Society.)

SEVERAL months ago I read a paper before the Western Society of Engineers on "The Equipment of Manufacturing Establishments with Electric Motors and Electric Power Distribution," which may be found complete in the journal of that society for December, 1896, page 807. The discussion on Professor Benjamin's paper on the "Friction Horse-Power in Factories" at our New York meeting last December† showed the large amount of interest which is now being generally taken in this important question relating to shop economies, and I have been requested to discuss it in a paper before the American Society of Mechanical Engineers. While I must of course repeat the views which I have heretofore expressed, additional matter which seems particularly pertinent to the subject is added in this paper.

When electric motors were first proposed for service on travelling cranes their use encountered great opposition upon various scores, but they have gradually secured a firm hold—at first only in situations specially difficult for other types of transmission, and finally in all kinds of general crane service—until the square shaft and running rope are no longer considered satisfactory power transmitters in crane service, and electric motors have little competition except in certain special classes of work.

A perfectly natural extension of the electric power-service, in shops equipped with electric power-circuits for cranes, gradually came about, and stationary motors furnishing power in isolated corners or places difficult to reach by the usual

---

* Presented at the Hartford meeting (May, 1897) of the American Society of Mechanical Engineers, and forming part of Volume XVIII. of the *Transactions*.

† *Transactions* A. S. M. E., vol. xviii., p. 228, No. 712.

closure. Another complicating feature is that there seems to be a relation in some way between the point of exhaust closure and the effect of entrained water upon economy. At any rate, with reduced initial pressure, the tests became more reliable in the sense that they could be more closely duplicated, and the bad effect of entrained water became less. Of course the wire-drawing would have some effect to dry the steam, and this probably accounts for a portion of the difference, but hardly for all of it; getting the water out of the cylinder more effectively seems to be a factor. This bad effect of water at light loads is very perplexing as well as serious. The writer has not been able to discover that entrained water, in any usual quantity, has any effect upon the economy of a high-speed engine working at one-quarter cut-off or later; but at light loads, and particularly with early exhaust closure and high compression, the bad effect is very marked. Under such conditions he has noted an increase in steam consumption as high as eight times the actual amount of water introduced. Perhaps the reason for this may be that the water is swept out of the cylinder each stroke by the more energetic exhaust of large loads, and accumulates from stroke to stroke with light loads, when the exhaust is light and the exhaust closure early. If so, does this water receive heat from the incoming steam, and give it out again to the exhaust? If the accumulated water is blown into spray by the inrushing steam it would seem possible that this might result—else how could such increased water consumption be caused by it? This bad effect of entrained water complicates the predicting of water rates at light loads very greatly and also makes it very difficult to obtain consistent results in making comparative tests. The writer has known the friction

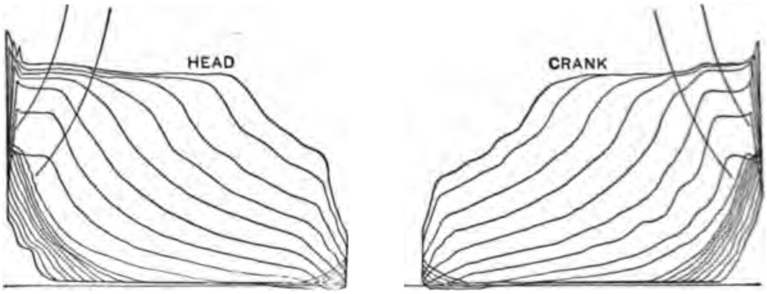

FIG. 391.

which are very large, from which excellent results have been obtained, but these must lie under the suspicion of being "show plants." I have therefore confined myself to the results obtained in plants which are entirely independent of the electrical manufacturing industries.

Before entering further into the subject, let me present typical lists of manufacturing concerns which are using electrical apparatus in place of shafts and belts. Some of these are using electric wires to carry all of their power from the engine room to the point of use, while others are in a transition or experimental stage, and are using main shafts and belts to transmit a portion of their power and electric wires to carry the remainder. In nearly every establishment which has a plant in the latter stage, the service by electricity is being increased and the shaft and belt transmission is being curtailed.

I submit a typical list of ten concerns owning plants with over 500 horse-power capacity in electric motors in their power equipments:

Ohio Steel Company.
Johnson Company.
Carnegie Steel Company.
Apollo Iron and Steel Company.
Cambria Iron Company.
A. & P. Roberts Company.
Baldwin Locomotive Works.
Westinghouse Machine Company.
Whitman & Barnes.
Silver Springs Bleaching and Dyeing Company.

Several of the plants included in this list are using over 1,000 horse-power in capacity of electric motors.

It will be noticed that this list is largely made up of concerns in the iron and steel industries, and which consequently manufacture a heavy and bulky product. That the majority of the list is made up of such concerns is partly due to the large amounts of power required by these industries and partly to the fact that product of the character concerned does not lend itself to convenient or economical handling in the shop when the common methods of power distribution are used, while electrical power-devices allow the disposition to be made in the shop which will give the most convenient and economical handling of the product while it is passing through the processes of manufacture. Electrical power-arrangements are equally convenient and efficient whatever may be the shop arrangement, and they lend themselves to many desirable shop arrangements which cannot be approximated where the old style inflexible systems of distribution are in use. The electric motor and the electric wire may be used just as efficiently under the conditions required for economical handling of the work in a steel mill or locomotive works as in an agricultural works, a spinning mill, a wholesale drug factory, a printing establishment, or a general manufacturing establishment.

The list given above might be considerably enlarged; and if we included establishments which have thrown aside their old power arrangements for the purpose of taking advantage of electrical power generated at a more or less distant water-power, the list could be greatly extended.

The following is a typical list of ten concerns owning plants with from 100 to 500 horse-power capacity in electric motors in their power equipments:

Wells & French Company, cars, etc., Chicago.
Crane & Breed Manufacturing Company, supplies, Cincinnati.
Deering Harvester Company, agricultural machinery, Chicago.
National Cash Register Company, cash registers, etc., Dayton.
Wm. Wharton, Jr., & Co., street railway track, Philadelphia.
Brooks Locomotive Works, locomotives, Dunkirk.
Parry Manufacturing Company, carriages, etc., Indianapolis.
Aultman & Taylor Machinery Company, boilers, Mansfield.
Parke, Davis & Co., manufacturing druggists, Detroit.
Stanley Works, hardware, New Britain.

This list, which includes only concerns of general reputation, I have chosen in order to illustrate the wide range of products which are manufactured by electrically driven machinery. The list could be readily increased in length to a degree which I am sure would quite astonish nearly all who listen to this paper. Let me add that in each concern represented on the list the electrical apparatus is used for general power service in the establishment (*i.e.*, it is not confined to any peculiar branch of the power service, such, for instance, as crane service).

I might extend my lists in number by giving separate lists of concerns in typical industries, such as printing and publishing establishments, iron industries, car shops, agricultural works, etc.; but what has preceded will doubtless give a sufficient view of the quite wide-spread use of electric power for general factory purposes, and I will pass at once to the results which have been derived from electrical shop-transmissions where they have been in use.

The points to be considered in a comparison between mechanical and electrical distribution of power in manufacturing establishments by which the advantages of one or the other are to be determined are:

A. Comparative first cost.

B. Comparative operating advantages, determined from experience derived from actual service.

1. Annual expense for fuel.
2. Annual expense for attendance.
3. Annual expense for repairs.
4. Frequency and duration of breakdowns, and extent of the whole plant which is likely to be affected by a failure of any part.
5. Convenience, as it affects the extent of floor space occupied by machinery.
6. Convenience, as it affects the handling of product at the machines and to or from the machines, and the amount of product put through the machines.
7. Safety.
8. Cleanliness.

I will take these points up in their order.

A.—COMPARATIVE FIRST COST OF ELECTRICAL AND OF MECHANICAL TRANSMISSION.

In the Case of a New Establishment.—The first cost of electrical transmission within the confines of a manufacturing establishment which has its own independent and complete power plant is nearly always considerably greater than the first cost of mechanical transmission, such as by gears and shafting, belts and shafting, or ropes and shafting. In each case the steam plant is required. In the electrical equipment the required parts, in addition to steam plant, are electrical generators, electrical wiring, electric motors. These are considerably more costly under ordinary conditions than belts and shafts or other mechanical transmitters, even if we acknowledge an advantage in the efficiency of the electrical plant which permits a reduction of the total capacity of the steam plant when electrical transmission is used.

The electrical equipment being, under ordinary conditions, more costly, it must make sufficient annual savings to pay a profit on its extra first cost, or it has no reason for its existence.

In the Case of an Established Concern.—The considerations of the last paragraph apply with extreme force in the case of a proposed change from mechanical to electrical transmission in an established concern, as such a change means, at the best, the abandonment of much operative transmission machinery. In some cases special considerations may enter, as is shown later.

The possible savings are discussed below under the respective headings belonging to the following divisions of

B.—COMPARATIVE OPERATING ADVANTAGES.

1 and 2. *Annual Expense for Fuel and Attendance.*—The following quotation from an editorial item which appeared in one of the technical journals nearly two years ago, puts the argument upon these points which favors electrical power:

"It is perfectly clear that Messrs. ——— have derived to the fullest extent the great advantages offered by electric transmission; they have saved valuable spaces formerly occupied by steam engines, and they have abolished to a great extent the losses due to mechanical transmission. The concentration of the whole of the steam plant in one compact space has led to great saving in labor, the majority of the men who formerly attended to the scattered steam plant being drafted into other work. It should also be pointed out that large compound and condensing engines are used with consequent economy. The central station which supplies the power has a capacity of 1,500 horsepower. . . ."

"At the ——— mills there will doubtless be a gradual but complete abandonment of isolated steam plants, for the proprietors are completely alive to the manifold advantages of concentrating steam raisers. It is yet too early to expect detailed costs of working, but there appears to be the greatest satisfaction with the general performance of the electric machinery, and a settled conviction that it is the only system which can efficiently supply power to scattered buildings."

This argument seems to be well supported by experience in great manufacturing establishments where hundreds or even thousands of horse-power must be distributed over a considerable area. In the establishments of less magnitude, such, for instance, as use not exceeding 250 horse-power, it is questionable whether any very large fuel saving can be shown by the electrical plant under ordinary conditions, and certainly no appreciable labor saving can be shown in the power plant. These deductions are supported by reference to the experience of a considerable number of manufacturing establishments, the names of which are in most cases synonymous with success. I regret that I have not been able to make tests on any plant by which I could directly and exactly determine the saving in idle-power losses which is effected by changing from shaft and belt to electric transmission. I have many records of the loss in power caused by shafts and belts, and several manufacturers have been good enough to give me records of idle losses in their electrical transmissions. A comparison of the records bears out the ordinary contention, which has a firm inductive foundation, that the idle losses are very much less with electrical transmissions. This gives the latter a decided advantage over main shafts and belts, on the score of economy, when a shop is run with portions shut down.

3 and 4. *Annual Expense for Repairs, and Frequency and Extent of Failures.*—Experience upon the relative expense for repairs upon electrical and mechanical transmission, and the relative extent and duration of breakdowns occurring with the two systems of transmission, is remarkably favorable to the electrical transmission.

Summing up the general opinion in regard to the above four points which is held in manufacturing establishments which are using electric power, it is safe to say that there is an overwhelming feeling in favor of the use of electrical transmission in preference to the various forms of mechanical transmission on the combined score of economy of operation and a reduced annoyance and expense through delays caused by failure of transmission apparatus.

This statement is based upon information which I have obtained from tests or which has been given me, directly or through correspondence, by a very considerable number of establishments. Quotations taken from my correspondence to show the feeling of experienced users of electric power are

was measured by a dynamometer *A*. The power transmitted through the machine was measured by a Prony brake, *P*, connected to the friction wheel *C*, which is put in motion by the back wheel of the bicycle. The friction of the Prony brake and of the wheel *C* for different loads and different speeds was determined accurately by calibrations, and in this way could be eliminated from the results. The dynamometer *A* is shown quite clearly in Fig. 395; the instrument is of the Morin type, is made in Paris, and is accurate for about one-half of one per cent. The results of the test are obtained from a diagram which is drawn automatically. By processes of differentiation the friction of the main bearings, the chain, the sprockets, and the back wheel can be obtained. Any weight whatever may be put on the seat post *F*. The tension on the chain may also be measured.

FIG. 394.

The results of tests of quite a number of chains are shown in the diagram, Fig. 396, from which it is seen that the Morse chain gave an efficiency over 99 per cent. in each case, or, as the diagram shows, had less than 1 per cent. of friction, while all the other chains, of which a number were tested, had somewhat over 2 per cent. of friction. The Morse chain is interesting

electrical transmission is so much more satisfactory and economical that it is a misfortune for a new manufacturing plant, except under very exceptional conditions, to be constructed with any type of transmission except the electric. It is to be understood that the electric equipment should be such that crane motors can be operated from the generators and transmission wires which are laid down for the regular factory power distribution, and, for the best results, the generator should also be adapted to the purpose of factory lighting. These conditions are fulfilled by either a 220-volt continuous-current system, using compound-wound generators, or by a properly designed polyphase alternating-current system. In the average manufacturing establishment the former seems to promise the best results, though more experience with the latter may prove it to give equally satisfactory results. The 220-volt continuous-current plant allows the use of 220-volt incandescent lamps connected directly between the positive and negative transmission wires, or arc lamps may be used in sets of four.

The status of electrical transmission in plants already built and equipped with mechanical transmission is more complex. Establishments which turn out heavy products, such as locomotive works, engine works, boiler works, machine-tool works, iron mills, etc., profit so much by electrical cranes that an electric plant is an invaluable accessory. It is then a natural step to do away with countershafts and belts running to the larger tools, which may be equipped for driving by electric motors and placed in more convenient positions with reference to handling the product. This change commonly results in a large reduction of the cost of manufacturing, and if carried out with caution and judgment is invariably satisfactory. A somewhat similar condition exists in establishments which turn out a bulky product, such as agricultural works, carriage works, etc. The convenient arrangement of machinery which may be gained by using electric motors adds materially to the product that can be put through such a shop, or largely reduces the transmission losses caused by quarter-turn belts, bevel gearing, etc. In the case of a plant of this type, upon which careful and complete tests have lately been made by two of my students, it is shown that the actual saving of power, attendance, and repairs now lost in great quarter-turn belts and other features usual in the mechanical transmission system of a somewhat scattered agricultural works, would nearly pay the annual sum necessary to cause a change of the old system into an electrical system to be profitable; while additional convenience in the location of tools, immunity from expensive stoppages due to injured belts, etc., and the advantages of satisfactory illumination gained from the power generator would give a large margin of profit upon the expense of putting in the electrical plant. Establishments which turn out a lighter and less bulky product gain less in convenience from the electric power, but there are numerous industries in which the cleanliness resulting from the suppression of shafts and belts is of the greatest moment. In these the electrical transmission may be made a great money saver, as is shown by the experience of its users.

There are many special conditions which make the adoption of electrical transmission of advantage in established industries where otherwise it would not pay to incur the expense involved in a change from an established mechanical transmission to a new electrical transmission. Thus, for instance, when an isolated building is located at some distance from the main building of the plant, the expense of operating a separate steam plant in that building, or of conveying power to the building by piping steam from the main plant, or by means of mechanical transmission, is often several times as great as the total annual cost of a complete electrical plant to be used for the purpose. In the total annual cost I include interest and depreciation, as well as fuel, attendance, and repairs. A number of cases of this kind have fallen under my observation.

Another case, in which the same result obtains, came under my observation recently. Here the establishment was a large one, with considerable transmission losses (equal to nearly 70 per cent. of the average useful load), and a considerable economy in fuel, attendance, and repairs would be effected by replacing the mechanical by an electrical transmission. The large expense involved justly deterred the proprietors of the plant from entering upon the change. The prime-power plant of the establishment is now found to be too small to carry the maximum load of the plant with late additions, while the reduced percentage of loss, incident in this case to the electrical transmission, would enable the engines to carry the load satisfactorily. The complete cost of a change to the electrical transmission is not greatly in excess of the cost which would be required in making the changes in the power plant which would be required for the purpose of adding an engine. These conditions being fully considered, and charging the excess cost, only, to the electrical transmission, the latter would make an annual saving in the cost of operating the works which would well repay for its installation. The electrical plant is here placed upon a basis which is quite near its position with respect to new establishments.

It is unnecessary to multiply similar instances, but I will summarize the entire question as follows:

1. In constructing new manufacturing plants, the extra first cost of a complete system of electrical transmission for the works is negligibly small (except under exceptionable circumstances) compared with the annual saving effected by its means when its advantages are properly utilized.

2. In certain industries the advantages of electrical transmission outweigh the first cost of making a change from mechanical to electrical transmission in established plants, while in many plants where this condition would not commonly exist the arrangement of buildings or the growth of the plant is frequently of a character with reference to the prime power-plant which places electrical transmission upon an advantageous footing, either as an auxiliary to the main transmission or as a rival to the existing mechanical transmission.

There is one more important question which affects electrical transmission alone. That is the question of the subdivision of power at the machinery. Briefly, the following seems to be the general consensus of opinion amongst those who have operated plants with electrical power. All large tools or machines, such as use from five to seven and one-half horse-power and over, should be supplied with individual motors, while smaller tools or machines requiring less power should be grouped and driven from motor-driven shafts. These groups should ordinarily be arranged so that a motor of not less than from three to five horse power capacity is required, and not more than from ten to fifteen horse-power. The grouping of tools, the subdivision of power, and the manner of delivering power of motors to driven machinery, it may here be said, is a matter which can be given only the most general treatment as a whole, as each industry includes conditions of its own which must be taken into the count. Observation indicates that some manufacturers who are using electrical power failed to weigh carefully the question of its subdivision when preparing to install their plant, and have thereby lost much of the advantage which may be derived from the electrical transmission.

I want, in conclusion, to express my thanks to those among the Society who have been so kind as to give me data or information. The subject is so intimately bound up with the question of shop economy that it is a very live one for manufacturers, and it is not yet exhausted of novel results ; and I propose by another year, if possible, to gather from the records of certain plants which are more or less typical, and from which I may be able to derive the information, more exact data relating to the economies due to electrical power in manufacturing plants. In gathering together the data which form the foundation of this paper I was forced to extend my information by resort to correspondence, and in some cases did not receive much assistance. One of my most interesting letters, which came from a prominent manufacturing concern, contains the following reply to a request for information regarding the comparative expense and general advantages of shaft and belt or electrical transmission as deduced from the experience of the concern :

"In these days of active competition we do not feel it is wise to make public the savings or advantages derived by introducing various economies."

I have not been able to decide from this whether the experience of the writer of the letter has been favorable or unfavorable to electrical transmission. As a whole, however, my correspondence showed a unanimity of experience in favor of the electrical plant that is quite remarkable. It is to be distinctly remembered that I have dealt solely with the comparative advantages of transmitting agents operated by the same prime mover. Wherever electrical methods allow advantage to be taken simultaneously of the economies shown by experience to lie in the electrical distribution of power, and the economy due to the substitution of a water-power, more or less distant, as prime agent, in place of a steam plant which is more expensive to operate, the electrical plant must prove a boon indeed to manufacturers.

DISCUSSION.

Prof. Chas. H. Benjamin.—Professor Jackson and myself seem to have been browsing in the same woods without either knowing of the other's presence.

In view of this it is encouraging that we should have reached conclusions so nearly identical in regard to the most essential points, and I am glad to note that his correspondence with such a number of manufacturers has confirmed the results reached by an entirely different means of investigation.

It seems to me that the nature of the work done in a shop and the general arrangement of the machinery and buildings determine the advisability of electric transmission to a greater extent than the amount of power used.

I can think of firms using less than fifty horse-power where the introduction of electricity would be profitable, and of others using several hundred horse-power where it would not.

I believe also that on many machines individual motors as small as two or even one horse-power can be used to advantage, and that we do not realize the full benefits of electrical transmission until we get rid of shafting to the greatest extent possible.

When a change from mechanical to electrical transmission would involve a large expense, the transition can be made gradually. Let it be resolved to use electricity in all extensions or wherever changes are made in the plant, and in the course of a few years the problem will have solved itself.

Mr. George I. Rockwood.—As a member has remarked on the silence of those who favor belt transmission instead of electrical transmission for general factory purposes, I am sure it is time something was said on the at present unpopular side of this question. In the first place, I wish to say that I admire the degree of mechanical excellence and efficiency attained by up-to-date electrical transmissions as much as anybody else does. Nor do I question the mechanical possibility of using electrical transmissions for nearly all places and purposes which other methods of transmitting power have heretofore satisfied. Hitherto the electrical enthusiast has confined his energies to substantiating what I have just admitted by exhibiting all kinds of machinery in all sorts of places in connection with a motor and electric wire.

No. 747—136.

The advantages and disadvantages of the rotary steam engine.

Prof. F. R. Hutton.—One of the members has sent in an inquiry as to the position which ought to be taken by competent mechanical engineers on the general question of its being worth while for inventors to waste their time and thought in the pursuit of a satisfactory rotary engine.

A recent work * covering subjects of this general sort has presented advantages and disadvantages of the rotary engine under the following heads:

1. The effort of the steam is applied directly without intervening mechanism for conversion of the motion with their attendant friction, their costly fitting, and probable lost motion.

2. There being no reciprocating parts, there is no inertia to be overcome at the beginning of the stroke, with the attendant consumption of energy required to accelerate them.

3. The engine has no dead-centre, but will start from rest in any position.

4. Absence of reciprocating parts makes it easy to run the shaft at the highest speed. This has attracted designers of steam-driven dynamos to use this type of engine.

5. The engine becomes very compact from the absence of converting mechanism, so that it occupies very little room.

6. The engine has either no valve-gearing, or that which it has is of the simplest character.

7. These features, and the absence of expensive mechanism, make the engine cheap to build and therefore usually cheap to buy.

8. Absence of reciprocating-rods and dead-centres results in a construction in which the presence of condensed steam in the cylinder does no harm. It does not stop the engine from turning, it cannot endanger the cylinder-casting, the engine can be started, even if under water, by simply opening the valve which admits pressure to it; it will start with solid water.

9. Its encased construction and the above peculiarities particularly adapt it for out-door service and exposed places. Weather does it no harm, and its protection from outside injury makes it a serviceable quarry motor.

---

* *Mechanical Engineering of Power Plants*, F. R. Hutton, 1897.

ceive how electricity can be applied. I know that in a manufactory with which I have been connected, employing approximately 350 men and with more than a thousand machines using less than a hundred horse-power—I do not see how you could subdivide electricity to work with the economy which was being obtained by the other method. In the company with which I am at present we own something over 100 motors and let them. They are distributed over an area of more than a square mile, and there is no question, if any gentleman here should come to my town and ask what he should do as regards the installation of power for any plant up to 25 horse-power, I should say that he better hire it of us, and I should try to convince him that that was a fact. There is an important field where electrical work is used also in furnishing power to people using three to five horse-power at a rate which competes quite favorably with the manufacturers who have to use 100 horse-power or less and pay an engineer and cannot use coal economically. I suppose that it might be considered as settled that the transmission over an area something like the Schenectady Works, where they cover a number of acres and have a number of different shops, ought to be by means of an electric plant. There you can install a larger engine which would work with a larger economy and transmit to the different shops, saving the time of your fireman and engineer at those shops, and there the problem would probably be settled in favor of one large installation. But when you come to the smaller manufacturers, where they are cutting their power into very small units, it is a question where, it seems to me, it is entirely on the other side, and that it would be impossible to do that work electrically in an economical way. I believe that the belts and rope-drives will run for some time on that sort of work. I have been surprised to see how much work can be done with a four or five horse-power motor in an ordinary machine shop. A year ago there was a boiler explosion in our city, and quite a large machine shop was thrown out of commission on that account, and I installed a 7½ horse-power motor directly on their shaft, they losing only one day's time for the installation of the motor. They were employing 12 or 15 men, and had some quite heavy tools. It is a very large tool that takes a five horse-power motor to do its work. I believe there are two things which might be considered settled now; one is the condition that prevails in Schenectady. I do not doubt but that their decision is correct. The Waltham watch factory will probably live quite a number of years before they have an electric installation at the end of every machine. Between those two points practice will oscillate.

*Mr. Dugald C. Jackson.**—This discussion requires but little reply, as the points raised are already covered with reasonable completeness in the paper. I do not agree with Professor Benjamin that each manufacturer should attempt to make a gradual change to electrical power. Unless such a change is made under proper advice and with a continued view to the successful working of the final whole, the result may be very unsatisfactory. When carried out in the proper manner, however, the change almost always results in decided advantage.

A complete reply to Mr. Rockwood's remarks rests in the facts of experience. The question under discussion is no longer in the hands of " electrical enthusiasts," but has passed into the realms of tried practice. Actual experience in numerous establishments has shown that each of the requirements for shop-power distributions which are cited on page 1051 are fulfilled satisfactorily by the electrical power, the last four to an extent unthought of with mechanical transmissions, and the first four to an extent which equals or betters the performance of the mechanical methods. This is the simple record of experience, a small portion of which is set forth in the paper. The answer to the question of established industries—Will the increased investment pay ?—depends on local conditions. In a plant about to be established there can now be little doubt.

---

* Author's closure, under the Rules.

DCCXLVII.*

TOPICAL DISCUSSIONS AND NOTES OF EXPERIENCE.

No. 747—133.

Steam distribution at early cut-off.

Mr. E. J. Armstrong.—For several years past the writer has had somewhat exceptional opportunity to note the economical performance—as shown upon the test floor—of a line of simple high-speed automatic engines ranging from 9 to 21 inches in cylinder diameter, and from 10 to 18 inches stroke. A constant reaching after better results has developed and proved to his satisfaction that the steam distribution usual in this type of engine is capable of some improvement. All engines of this class with which the writer is acquainted, carry their initial pressure as nearly to boiler pressure as they can, throughout their entire range, from no load to latest cut-off, and as evidence of the importance generally ascribed to this feature, so good an authority as Mr. F. H. Ball, in the closing sentence of a paper presented at the last meeting of this society, maintained that the prevention of wire-drawing at early points of cut-off is a matter of too great importance to be neglected, even for the sake of considerable saving in cost. Judging merely by the indicator cards it must be admitted that this would seem true, but the accumulated evidence of actual duty trials forces a quite different conclusion. One of the first points noted by the writer, when beginning the series of tests referred to, was the fact that the duty curves made at different boiler pressures from a particular engine, always crossed each other when plotted upon the same sheet (Fig. 388); that is, the actual water consumption per horse-power was always lower at say 80 pounds boiler pressure than it was at 100 pounds, up to a certain load where they became equal; at larger loads the higher pressure being, of course, the more economical. It may be well

---

* Presented at the Hartford meeting (May, 1897) of the American Society of Mechanical Engineers, and forming part of Volume XVIII. of the *Transactions.*

to state that this might not be well shown with curves plotted in the usual way, but if the Willans curve is employed, plotting total water per hour instead of water per horse-power per hour, this crossing of the lines and many other questions are made more clear. The first suggestion was that leakage was taking place, and after this had been proven not to be the reason, cylinder condensation seemed to explain it. It was noticed that although

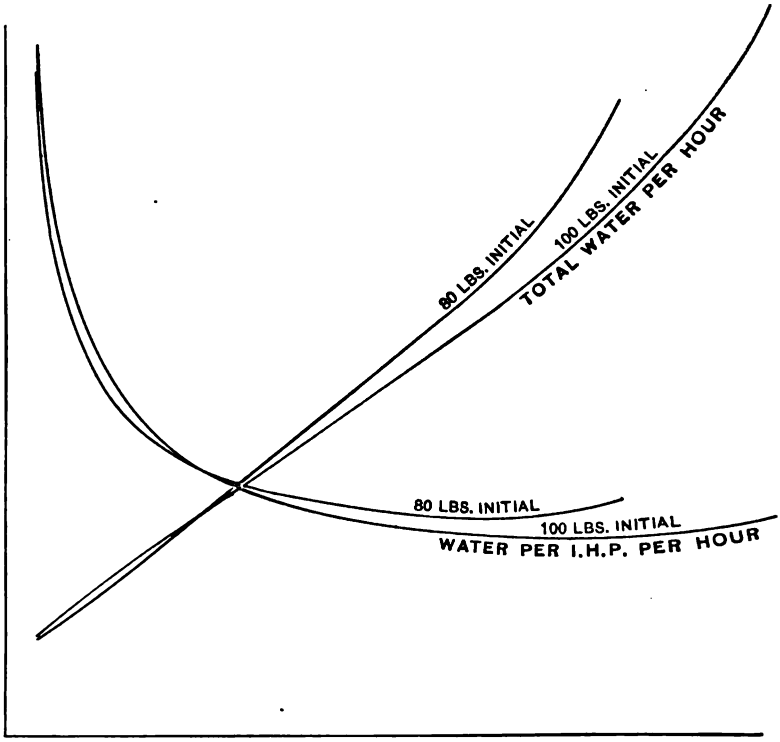

FIG. 388.

the point where the curves crossed was at a considerable load—something like one-third of the rated power of the engine, and later in a small than in a large engine—yet the lower curve came back up to the higher at friction load. This seemed to be accounted for by the fact that the friction cards were much alike at the different pressures, the compression being about equal to the higher boiler pressure in both cases, so that the temperature range was about the same. Further experiment showed that a friction card with a lower initial pressure gave a lower water rate, and by degrees it became apparent that for loads less than at the point where the curves crossed, the best steam distribution would be the same for all boiler pressures. The theory was then evolved that for any particular engine there is a curve which may be described most easily by assuming that the engine was tested at several loads with various initial pressures. Then for each load there would be found a certain initial pressure which would carry that particular load with better economy than either a higher or lower initial pressure. Superimposing the cards obtained at the various loads and most advantageous pressures and drawing a curve through the points of cut-off, would produce a diagram which may be represented by Fig. 389. Then the total range of the engine from friction to maximum load would be most economically covered by the steam distribution indicated in Fig. 390. This theory is so plausible that it may be misleading. Really the curve shown in Fig. 388 can hardly be represented by a line. Any point on the line would have to be found as the lowest point in a rather flat curve; and a belt or zone as shown in Fig. 391, and within which the point of cut-off should lie, would be more practical. No great difficulty was experienced in obtaining the desired steam distribution with a single valve, as evidenced by Fig. 391, in which the cards are from actual practice; and it was of course accomplished by making the lead negative at early cut-off, the good results at light loads being at once apparent. The more nearly constant compression brought about by this change permits smaller clearance, and this, in turn, brings about later exhaust

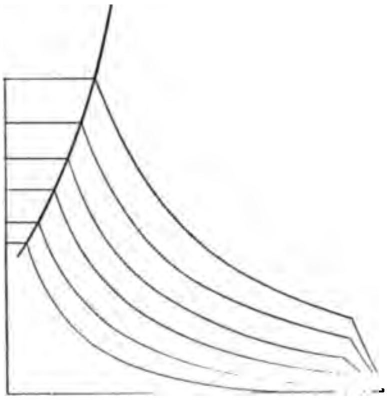

FIG. 389.

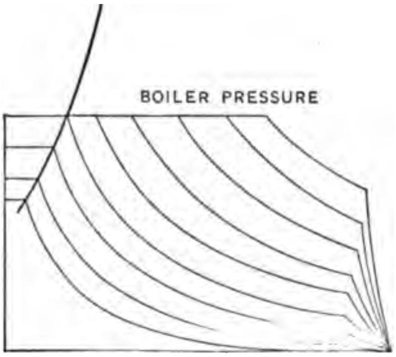

FIG. 390.

closure. Another complicating feature is that there seems to be a relation in some way between the point of exhaust closure and the effect of entrained water upon economy. At any rate, with reduced initial pressure, the tests became more reliable in the sense that they could be more closely duplicated, and the bad effect of entrained water became less. Of course the wire-drawing would have some effect to dry the steam, and this probably accounts for a portion of the difference, but hardly for all of it; getting the water out of the cylinder more effectively seems to be a factor. This bad effect of water at light loads is very perplexing as well as serious. The writer has not been able to discover that entrained water, in any usual quantity, has any effect upon the economy of a high-speed engine working at one-quarter cut-off or later; but at light loads, and particularly with early exhaust closure and high compression, the bad effect is very marked. Under such conditions he has noted an increase in steam consumption as high as eight times the actual amount of water introduced. Perhaps the reason for this may be that the water is swept out of the cylinder each stroke by the more energetic exhaust of large loads, and accumulates from stroke to stroke with light loads, when the exhaust is light and the exhaust closure early. If so, does this water receive heat from the incoming steam, and give it out again to the exhaust? If the accumulated water is blown into spray by the inrushing steam it would seem possible that this might result—else how could such increased water consumption be caused by it? This bad effect of entrained water complicates the predicting of water rates at light loads very greatly and also makes it very difficult to obtain consistent results in making comparative tests. The writer has known the friction

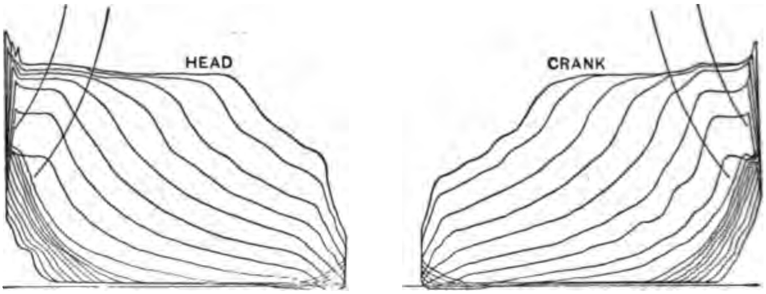

FIG. 391.

water rate of a 100 horse-power engine to be lowered nearly 10 per cent. by slightly opening a valve draining the steam chest. The water so allowed to dribble out not being one-sixth of the total saving. In view of the general complexity of the problem the writer does not feel able to place before the Society any tests or other exact data, for no single test seems of much value in this problem; neither does it seem best to attempt to give an idea of the amount of saving to be derived. To carry out the scheme properly involves many other changes, which all have a good effect, perhaps greater than change in initial pressure.

What experience can the members present in discussion upon this subject?

No. 747—134.

Tests of the efficiency of the bicycle.

Mr. Jno. G. D. Mack.—The writer has had opportunity, during his professional work, to make a somewhat extended series of experiments upon the bicycle as a machine, and aims to present in the present paper a preliminary report of the investigation. While much of this information, and in a very much more extended scale, is in the possession of the best manufacturers, yet the fact that it is for such persons a species of proprietary knowledge renders it difficult or unwise for them to make it public, and for these reasons the literature of engineering contains very little published material on these questions.

It would be interesting to look briefly at the bicycle as a machine, for the past fifteen years have brought many and great changes in its design. The early 80's saw the advent of the high wheel, known as the ordinary, but the modern wheel has almost nothing of the old wheel except the features which gave it a foothold upon existence, which were its rubber tires and its ball bearings. The first safeties often weighed from sixty to seventy-five pounds and their sprockets and chains were similar to those used on agricultural implements; but the process of evolution and survival has left little to be desired from many points of view, since the weight has been reduced until further reduction seems unnecessary, and the strength and durability, which allow great speed with small effort, are realizations of the dreams of the old riders.

In the present article, the total efficiency of the bicycle will be treated, together with the experimental results on the efficiency of sprocket wheels of different size, and at another time will be given the results of experiments upon chains, tires, size of balls, shape and position of ball races, multicycles, speed-gears, and methods of driving other than by chain.

In the experiments on total efficiency a method has been adopted which places the bicycle as nearly as possible under riding conditions, and is illustrated in Fig. 392.

The apparatus consists of a 10-inch I-beam planed smooth on top, and adjusted perfectly level; a rectangular frame *C*, as shown in Fig. 392; a pulley *P*, weights and scales.

The handle bar is firmly secured so that both wheels shall be in the same plane and the bicycle mounted upon the beam with the frame *C* attached to the seat part. This frame is bound to the rear forks, and extends below the beam, having a shelf *D* attached to its lower end, extending in a direction at right angles to the beam a distance of 36 inches.

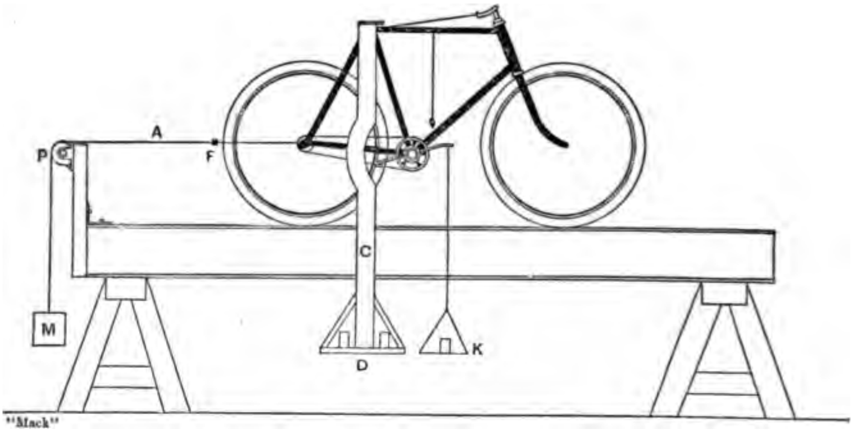

FIG. 392.

A load of 150 pounds in lead is placed upon the shelf *D*, which will maintain the bicycle in an upright position and allow it to roll along the beam, which is of sufficient strength to prevent measurable flexure. Attached to each end of the rear axle is a wire *A*, these wires being fastened to the ends of a yoke *F*, from the centre of which a horizontal steel music wire runs over the pulley *P*, and carries the weight *M*.

The pulley *P* has its efficiency determined for different weights, and a curve plotted, from which the pull on the wire A, necessary to raise a known weight M, may be read directly.

One of the cranks is set about 10 degrees above the forward horizontal position, and a scale pan K suspended from the middle of its pedal. For a distance of nearly 10 degrees on each side of the horizontal position of the crank its effective radius does not vary one per cent. and may be considered as constant during that period of rotation.

The bicycle has now been transformed into a hoisting machine for raising the known weight M by a weight applied to the pedal, and the method of testing is that commonly employed in testing the efficiency of pulley blocks, which admits of accurate measurement of the different quantities entering the experiment.

The condition under which the bicycle is placed by this method is that of a rider of 150 pounds sitting upright and propelling himself by shifting his weight from the saddle to the pedal, the equilibrium being maintained in the experiment by shifting the weight remaining on D in a direction away from the loaded pedal, and as the pedal weight is taken from D, a constant total load is maintained on the machine.

This method is satisfactory in practice, for when raising M by five pounds, less than one-half ounce added to the pedal weight is sufficient to change the bicycle from a condition of balance to that of moving forward at an uniform speed.

All measurements must be made with the greatest care, and it is especially necessary that the beam should be level and each wheel in perfect balance. The circumference of the tire is determined by rolling the bicycle along a smooth track with its load of 150 pounds, and measuring the distance travelled for one revolution, this distance being determined by observing when a fine mark upon the tire shall be vertically under the centre of the axle, at the beginning and end of the revolution.

The total efficiency of the bicycle may now be determined as follows:

A = circumference of tire.
B = circumference of centre of pedal pin.
R = ratio of large to small sprocket.
P = weight on pedal.
M = weight on wire divided by efficiency of pulley.

$$\text{Total efficiency} = \frac{M\,R\,A}{B\,P}.$$

The results for each wheel are plotted, giving a curve in which the ordinates represent per cent. efficiency, and the abscissas the gross weight raised at the corresponding efficiency.

The efficiency curve for bicycle No. 1 is shown by the full line in Fig. 393, No. 1 being a bicycle of 1897 model, having ground bearings, and representing the best practice in bicycle construction.

Bicycle No. 2 is a medium grade wheel, and its curve is shown in Fig. 393 by the dash line.

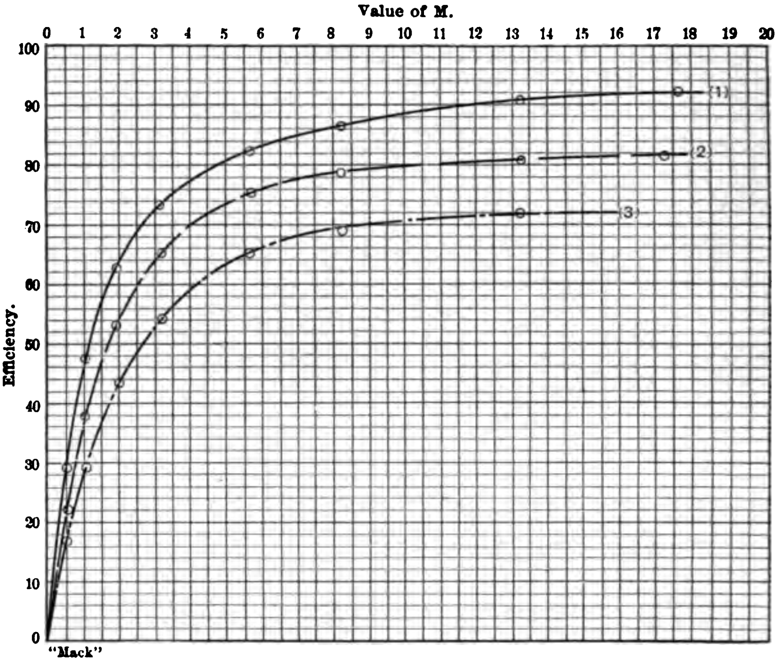

FIG. 393

Bicycle No. 3, the curve of which is shown by the dot and dash line, was purposely selected as being a cheaply constructed wheel, having in fact nothing but its low price to recommend it.

These three curves represent the efficiency of the three bicycles by a method which it is believed, when carefully applied, will give results of the greatest precision and definitely indicate the comparative efficiency of bicycles under the conditions found in actual service.

The weight *M* of 15 pounds may be roughly taken to represent the effort required to propel a rider of the assumed weight up a grade of one foot in twelve.

SIZE OF SPROCKETS.

In determining the comparative efficiency of sprockets of different size, the bicycle was inverted, and the frame securely attached to the floor.

A method similar to that employed in determining total efficiency was used. A thin steel band had one end attached to the tire, the other end carrying a weight which was raised by the band being wound upon the tire, a second weight being hung from a scale pan attached to the pedal as in the preceding experiment, whence the efficiency of the portion of the mechanism transmitting the power can be calculated as before.

A long series of readings were taken with the same large sprocket with seven, eight, and nine tooth sprockets on the rear, and with pedal weights varying from two to fifty pounds.

The average efficiencies in each case were as follows:

7-tooth	89.7
8-tooth	91.5
9-tooth	93.4

This shows the 8-tooth to have 98.9 per cent. of the efficiency of the 9-tooth, and the 7-tooth to have 96 per cent. of the efficiency of the 9-tooth sprocket, other conditions being equal.

In actual service, however, the largest rear sprocket which the required gear ratio will allow, is to be preferred, from its better wearing qualities due to the smaller chain pressure upon the teeth and reduced pressure on the bearings.

Have any of the members data upon the efficiency of the bicycle as a machine?

Prof. R. C. Carpenter.—In connection with the interesting paper by Mr. Mack, it may be stated that a considerable amount of experimenting has been done the past year on the subject of bicycle efficiency in the laboratories of Sibley College. The method adopted for determining the friction of the chain was almost identical with that described by Mr. Mack, but for testing the bicycle under running conditions an apparatus was designed so that the bicycle could be tested when the wheels were moving at any speed. The arrangement for the test is shown in Fig. 394. The bicycle was driven by power which

was measured by a dynamometer *A*. The power transmitted through the machine was measured by a Prony brake, *P*, connected to the friction wheel *C*, which is put in motion by the back wheel of the bicycle. The friction of the Prony brake and of the wheel *C* for different loads and different speeds was determined accurately by calibrations, and in this way could be eliminated from the results. The dynamometer *A* is shown quite clearly in Fig. 395; the instrument is of the Morin type, is made in Paris, and is accurate for about one-half of one per cent. The results of the test are obtained from a diagram which is drawn automatically. By processes of differentiation the friction of the main bearings, the chain, the sprockets, and the back wheel can be obtained. Any weight whatever may be put on the seat post *F*. The tension on the chain may also be measured.

FIG. 394.

The results of tests of quite a number of chains are shown in the diagram, Fig. 396, from which it is seen that the Morse chain gave an efficiency over 99 per cent. in each case, or, as the diagram shows, had less than 1 per cent. of friction, while all the other chains, of which a number were tested, had somewhat over 2 per cent. of friction. The Morse chain is interesting

since it shows an attempt to use knife edges on hard steel plates in place of pin joints.

Our tests with the bicycles have not progressed far enough to give definite results, but sufficient has been done to show that the greater portion of the losses in well-made wheels are due to the tire, the losses in the tire generally running three or four times as great as all other losses combined.

FIG. 395.

was measured by a dynamometer *A*. The power transmitted through the machine was measured by a Prony brake, *P*, connected to the friction wheel *C*, which is put in motion by the back wheel of the bicycle. The friction of the Prony brake and of the wheel *C* for different loads and different speeds was determined accurately by calibrations, and in this way could be eliminated from the results. The dynamometer *A* is shown quite clearly in Fig. 395; the instrument is of the Morin type, is made in Paris, and is accurate for about one-half of one per cent. The results of the test are obtained from a diagram which is drawn automatically. By processes of differentiation the friction of the main bearings, the chain, the sprockets, and the back wheel can be obtained. Any weight whatever may be put on the seat post *F*. The tension on the chain may also be measured.

FIG. 394.

The results of tests of quite a number of chains are shown in the diagram, Fig. 396, from which it is seen that the Morse chain gave an efficiency over 99 per cent. in each case, or, as the diagram shows, had less than 1 per cent. of friction, while all the other chains, of which a number were tested, had somewhat over 2 per cent. of friction. The Morse chain is interesting

since it shows an attempt to use knife edges on hard steel plates in place of pin joints.

Our tests with the bicycles have not progressed far enough to give definite results, but sufficient has been done to show that the greater portion of the losses in well-made wheels are due to the tire, the losses in the tire generally running three or four times as great as all other losses combined.

FIG. 395.

Prof. Thos. Gray.—The tests which are given in this paper seem to cover a very small part of the field which ought to be undertaken in connection with the bicycle as a machine. A great part of the work which is done in propelling a bicycle, as is pointed out by Professor Carpenter, is due to the tire undoubtedly. That will increase with increase of speed, and therefore increase of speed tests ought to be made. There is another element which I should like to see taken up, and that is the amount of work which is expended in racking the frame. As a rider propelling a bicycle does not give a uniform torque to the sprocket of the machine, but pulls up with his hands and pushes down with his feet alternately on opposite sides, there is, therefore, a great amount of work done in distorting everything—outside of the chain friction, the ball-bearing friction, which is practically zero, and the tire friction, which will be proportional, to some extent, to the speed.

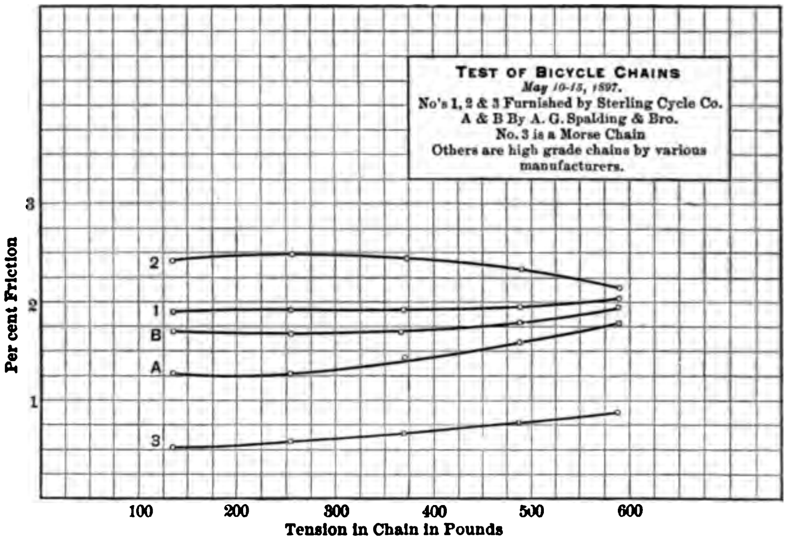

FIG. 396.

Prof. John H. Barr.—I would like to say a word with regard to the results given with the different sizes of sprocket wheels. Of course a larger rear sprocket means a less pull on the chain and less pressure on the chain pins and the bearings. But there is a practical limit here—that is, a limit to the linear velocity with which the chain can be run quietly and smoothly.

This is pretty closely reached, I imagine, with a few of the wheels placed on the market this year which have a ten-tooth rear sprocket.

I might say that the apparatus used at Cornell University, to which Professor Carpenter referred, is very similar indeed to the one which many of us have seen at the works of the Pope Manufacturing Company, except that instead of using the Webb dynamometer he is using a Morin dynamometer; beyond that the apparatus is identical in principle and very similar in construction to the one used by the Pope Manufacturing Company.

Mr. H. H. Suplee.—In regard to the point brought out by Professor Gray about the distortion of the frame, I think that is very well illustrated by some experiences had in England. An attempt has been made there to build a very light wheel by making the frame of bamboo, and while it is very light and strong, it is too elastic, and it is found, especially in climbing grades or for high-speed work, that the frame yields to the efforts of the rider to the extent of absorbing a great deal of the useful work. This has led to their general abandonment. Doubtless this action takes place to a considerable extent on the steel frames, though, of course, not so much as with the bamboo.

Prof. Albert Kingsbury.—I anticipate that the smaller sprocket wheels will, when tested with well-oiled chains, show higher efficiencies than the larger ones. Such tests as I have made on other kinds of mechanism involving very high pressures on well-lubricated surfaces at very slow speed, indicate in many cases that there is a smaller coefficient of friction at the higher pressures. If we decrease the size of the sprocket wheel we increase the tension of the chain in a corresponding ratio. But if there is a smaller coefficient of friction at the higher pressure, then the smaller sprocket wheel ought to give us the greater efficiency.

No. 747—135.

Note on an old windmill gearing.

Mr. C. W. Hunt.—The old windmill at Nantucket, Mass., was built in 1746—one hundred and fifty-one years ago. It is of moderate size, and in a good state of preservation, although it has not been operated for about twenty years. For about one hundred and thirty years it ran, and only terminated its work when modern milling methods made the small local mills unprofitable. The millstones are about 4½ feet in diameter, and the runner driven directly by the vertical shaft. The engraving (Fig. 397), from a hand camera photograph, shows the gear wheels, which are typical of all the old types of windmills, both in Holland and America.

FIG. 397.

The face wheel is about 10 feet pitch diameter, with 6 arms and 62 teeth, 6 inches pitch. The lantern wheel is about 23 inches in diameter, with 12 rundles, each 3 inches in diameter. The teeth in the face wheel are old and well worn, but the rundles in the lantern wheel are comparatively new; the injury to them shown in the picture was evidently caused a few years ago when the mill was started up to entertain tourists. Incompetent management soon caused such damage that it was finally shut down.

The rundles were accurately turned to fit the holes in the lower head of the lantern wheel. As the holes in the upper head are smaller and the rundles wore in service they were shoved up through the upper head and held by wooden pins over the upper head. The holes in the upper head are smaller than those in the lower, and the reduction in the size of the pins from time to time as they wore and were shoved up to a new position was crudely done, as the photograph shows.

The wooden strap brake for stopping the mill shows on the left and under side of the face wheel. The chain hanging down was used to chain the face wheel fast.

The heads of the lantern wheel and the vertical shaft show evident signs of great age, but no data were obtainable when the photograph was taken. The durability, however, of this type of wheels is very great.

In 1889 I visited a windmill in Holland with gearing similar to the Nantucket mill, which had been built sixty years before. The face-wheel teeth were being renewed, and the owner informed me that the first set of teeth were replaced thirty years ago, and as these teeth had been in service thirty years, he was again renewing them, evidently considering the "life" of gear teeth as thirty years. They were also renewing the main shaft which had been in since the mill was built. The mill was used for grinding grain, and ran night and day, probably 18 to 20 hours per day for the entire time. The gear teeth were greased with tallow.

The small wear of the teeth in service where the working pressure must be quite large for wood surfaces may be accounted for by their elasticity. The teeth of the face wheel and especially the long rundles of the lantern wheel are decidedly elastic, and when the pressure of the teeth is great, they spring enough from the geometric lines to prevent all sliding of the surfaces in contact during the time that the pressure is great. The sliding of the surfaces takes place only at the beginning and ending of the tooth action, when the pressure is comparatively light.

No. 747—136.

The advantages and disadvantages of the rotary steam engine.

Prof. F. R. Hutton.—One of the members has sent in an inquiry as to the position which ought to be taken by competent mechanical engineers on the general question of its being worth while for inventors to waste their time and thought in the pursuit of a satisfactory rotary engine.

A recent work * covering subjects of this general sort has presented advantages and disadvantages of the rotary engine under the following heads:

1. The effort of the steam is applied directly without intervening mechanism for conversion of the motion with their attendant friction, their costly fitting, and probable lost motion.

2. There being no reciprocating parts, there is no inertia to be overcome at the beginning of the stroke, with the attendant consumption of energy required to accelerate them.

3. The engine has no dead-centre, but will start from rest in any position.

4. Absence of reciprocating parts makes it easy to run the shaft at the highest speed. This has attracted designers of steam-driven dynamos to use this type of engine.

5. The engine becomes very compact from the absence of converting mechanism, so that it occupies very little room.

6. The engine has either no valve-gearing, or that which it has is of the simplest character.

7. These features, and the absence of expensive mechanism, make the engine cheap to build and therefore usually cheap to buy.

8. Absence of reciprocating-rods and dead-centres results in a construction in which the presence of condensed steam in the cylinder does no harm. It does not stop the engine from turning, it cannot endanger the cylinder-casting, the engine can be started, even if under water, by simply opening the valve which admits pressure to it; it will start with solid water.

9. Its encased construction and the above peculiarities particularly adapt it for out-door service and exposed places. Weather does it no harm, and its protection from outside injury makes it a serviceable quarry motor.

---

* *Mechanical Engineering of Power Plants.* F. R. Hutton. 1897.

10. It requires no skill to handle it. If constructed to be reversible, it can be reversed from a distance by simple rope and weight.

DISADVANTAGES OF THE ROTARY ENGINE.

The objections to the rotary engine are both practical and inherent. The practical objections belong to the difficulty of satisfactorily packing surfaces which do not move through equal spaces in equal times. Those parts farther from the axis move through a longer path in a revolution than those nearer to the axis. The wear from abrasion is therefore greater at one part than another. When the packing-strips have become somewhat worn, leakage ensues, and a noisy rattle from looseness of the fits. A second practical difficulty is the expense connected with proper lubrication of such engines, and a difficulty of taking care of excess of oil rejected by the exhaust. If efficiently lubricated, they consume an excessive amount of oil.

The inherent objections to the rotary engine are:

1. The presence, in the volume to be filled by live steam from the boiler, of an excessive waste space which has to be filled by steam at each revolution, which steam is exhausted without doing all the work there is in it. This corresponds in reciprocating engines to an excessive clearance.

2. The very continuity of the action of the steam upon the rotating pistons precludes the possibility with the single rotary engine of working the steam expansively, so that when the steam leaves the motor it shall have become largely reduced in temperature and pressure by doing work with increase of its initial volume. The expansion is from the boiler and the water in it, and not from the actual volume received by the engine for the work of one stroke. In other words, the rotary engine is a non-expansive engine. These two difficulties make the rotary engine uneconomical.

3. It is difficult to design the rotary engine for large horse-powers:

First, because the structure becomes inconvenient the moment that large areas are desired, so as to make a value of PA in the horse-power formula a large factor; second, because it becomes difficult to secure the condition of high piston-speed in feet per minute unless the diameter of the casing be made so large that the difficulties both practical and inherent become nearly insurmountable and the advantages of the rotary principle are sacrificed.

The economy which a single rotary engine cannot secure from its inability to work the steam expansively has been sought and secured in a degree by arranging rotary engines in series upon a shaft, so that the steam rejected from number one becomes the driving steam for motor number two of larger volume. By this means the steam when rejected is at more nearly the pressure and temperature of saturated steam at atmospheric pressure than can be attained with the single rotary engine.

In view of the existence of such disadvantages, both inherent and as yet unavoidable, how ought an engineer to meet the approach of inventors of rotary steam-engines, if he wishes to retain a clear conscience and give sound advice? Have the words, "No Thoroughfare" been written over against the path towards a successful rotary engine?

No. 747—137.

Basement floors for machine shops.

Prof. Jno. E. Sweet.—To fix one's ideas in treating this topic, let it be assumed that the ground to be floored is both solid and damp.

With the solid ground only such a depth of filling is necessary as that required to distribute a concentrated load over large enough area, so that a hole will not be punched through what constitutes the floor. Concrete, if of the best quality, may be as good as anything, and the necessary thickness would depend on the weight of the loads which it has to support. In the writer's opinion a layer of thin flat stone, or two layers, bedded in concrete, and then a thin coating of concrete to give the full depth of say 6 inches, is better than 6 inches of concrete, however good.

To cut off the moisture which is to be expected a coat of asphalt is best. Quick-lime would be effectual, but with an unmatched floor the lime would sift through the cracks. The writer believes that a layer of two-inch plank is better than scantlings buried in the cement, as it better distributes the load, and joints in the top floor can come anywhere. We have determined by experience that the expected in this case does not happen; the floor does not spring up and down. The top flooring is best of only $\frac{7}{8}$ inch stuff, $5\frac{1}{2}$ inches or less in width. When the thin top floor is worn through in places and needs repairing, the hole or depression is only $\frac{7}{8}$ inch deep, whereas with thicker top flooring it is deeper.

Were we again to lay a floor we would cut all the top flooring into four-feet lengths to facilitate repairing, breaking joints every course.

At the works of John Lang & Son, of Johnstown, Scotland, their shop floor is wholly of iron chips, and is a solid, fairly good floor. Not as clean as a wood floor, but one that would answer well in a basement. The cost of such a floor would depend on the market value of chips. It is cheap to put down and the night watchman can keep it in repair.

The above speculative consideration of the subject is presented for the express purpose of having those who have had experience give the facts, which, as usual, are more likely than not to upset the theory. What is the best construction for the basement floors of machine shops ?

Mr. C. J. H. Woodbury.—In the design of a floor to give satisfactory service in the basement of a machine shop, consideration must be given to the functions to be required of the floor and also for the foundation upon which it will rest. Wood is by far the best material in the construction and service of a floor, being a non-conductor of heat, which furnishes a comfortable foothold for the feet, as well as a good grip for a pinch bar. It is something more than a mere chance that the help employed on the stone floors in European mills wear either sabots or Lancashire clogs, which interpose wood under the feet.

One of the principal difficulties with a basement floor of wood is the rapid decay which is apt to occur in certain places in particular kinds of lumber.

The antiseptic processes which are applied to wood are in many instances odorous, slippery, and improperly applied to such an extent that they fail to serve their purposes. Outside of the claims of interested parties, the preservation of wood is an open question in that various processes appear to be more adapted to some kinds of lumber than to others, and there appears also to be a difference in results under what is supposed to be uniform conditions of material.

One of the leading railroads in the United States, which takes pride in the standard nature of its specifications, has had a committee on preservation of wood during the last twelve years, but that committee has not as yet submitted any report, although constantly in service.

A basement floor should not cover a small, confined air space which receives damp exhalations from the ground, developing dry rot on the under side, and this can be prevented and the stability increased by laying the floor on a support of solid filling. It is poor engineering to lay the floor on sills or beams in such a case, because it does not increase the carrying capacity of the floor any more than holding a part of the load in one's lap relieves the horse, and it is also poor construction to use beams or sills, because they are more liable to decay when buried in concrete than in any other position, and thereby relieve the floor of the corresponding amount of support, their only useful purpose being a convenience during the construction of the floor, which can be accomplished in other ways.

The foundation of a basement floor should be relieved as far as possible from dampness by suitable underdraining, and it is well to place the material as near grade as possible during construction, when the use of carts and the tread of workmen in the basement may tend to render it more compact on the upper surface. If a basement is under the tide level or near water-power canals so that it is under the water table, and therefore subject to the uplifting power of water percolating through the earth, it is necessary to make the floor double, the lower portion being laid with hydraulic cement concrete and inclined with numerous grooves running to a sump in a corner or some convenient place from which any water may be removed by pumping. Upon this, loose stone can be placed and afterwards well rammed, and to such a depth that its weight will be greater than the upward pressure of the water in the earth.

For the foundation for such a floor the preferable base is to lay a concrete of cement in the proportion of one part of cement and six parts of sand and broken stone, the latter in the proportion one to two. After this is thoroughly dried, the cement should be mopped over with melted coal tar, which, if followed by a second coat, will very thoroughly seal the concrete and prevent the rise of dampness or gases through it. Coal-tar concrete may be used for the same purpose, but perhaps is not as permanent in its character, and, moreover, has a distinct odor for a long time after being laid and is easily softened by oil. The concretes are not suitable for a machine-shop floor without further protection, because the dust which is removed from them by the attrition of wear is injurious to both machinery and the stock in process.

For the flooring on a concrete foundation experience shows that a 1½ inch plank, in as long lengths as practicable, but without any regularity in lengths so as to break up uniformity in the position of the butt joints, should be covered by a top flooring of hard wood laid at right angles. There are two methods of placing the top flooring, one being to use the channelled maple board with blind nailing, and the other to drive, directly through the two layers of flooring, long enough spikes to penetrate the concrete below. It is highly important, however, around electric generators that the electrical resistance of the wood, even with blind nails, should not be relied upon as a protection, but that rubber mats should not be merely placed on the floor, but secured there where one is liable to handle conductors.

For the upper floor, maple presents the most desirable appearance, but it is considered that the black birch will resist better than any other lumber obtainable in this vicinity, but there is probably more southern pine used for this purpose.

For the under plank of the floor, chestnut easily obtains the first preference, and hemlock next, notwithstanding its tendency to warp in seasoning. Nevertheless, I have known an instance where spruce, despised on account of its tendency to decay in damp places, has performed good service during some forty years of use. For other purposes of construction the use for filling under floors may be cinders, spent moulding sand, and air-slacked lime on broken stone, all of which have served useful purposes.

Other forms of basement floors require perhaps more rigidity than what has been outlined in these suggestions. A boiler shop in a locomotive works has a floor which consists of a pavement of cobble-stones covered with 8 inches of coal-tar concrete, upon which is one course of 4-inch chestnut plank, upon which is laid another course of 4-inch oak plank, and the two treenailed together.

These remarks upon basement floors are meant to refer only to the needs of machine-shop practice, and these general principles may, with modifications, be applied to basement floors used for other purposes ; but that is another story.

Prof. Chas. H. Benjamin.—In my experience the principal difficulty with basement floors is the dampness; concrete will not keep it out, and the flooring rots rapidly.

This will be most noticeable when the subsoil is a hard clay, not readily absorbing the surface water.

I have lately seen one basement floor laid in a large shop about 100 feet wide and 200 to 300 feet long. The material was excavated to a depth of about three feet below the floor line, and a system of porous drain tile laid, sloping from the centre either way towards the sides and discharging into outside drains. The whole space was then filled in with cinders carefully rolled as for a roadway. The upper surface was accurately graded to a level and the floor joists laid flush in the cinder without tamping, a heavy roller being depended on to insure the same degree of density and hardness at every point.

A 2-inch matched floor was then laid, resting on the joist and cinder alike, and this in turn covered with the usual ⅞-inch narrow, hard-wood flooring.

This floor, as completed, is practically a unit, resting on but not fastened to the cinder bed, and as the latter is of even density the assumption is that the floor will remain level. Time only will determine the success of this plan.

No. 747—138.

Crystallization by shock.

Mr. Gus. C. Henning.—The question has frequently been asked whether structural change takes place in solid forgings of wrought iron or steel as the result of continued vibration, either under strain or in the absence of it. This question thus put is quite as indefinite as it is possible to make it, and to a logical mind it is about as definite as another famous question which was once asked of an old woman as to whether "the geese lay eggs." She answered calmly, "That depends," and began a lengthy explanation by saying that "If they are not all ganders," etc., etc. To answer the question even in a very brief manner, it becomes necessary to define—

1. The particular kind of solid forgings of wrought iron or steel;
2. The particular condition each is in;
3. The particular processes to which each has been subjected;

4. The particular stress to which each might be subjected;
5. The degree of stress to which each might be subjected.

Forgings have frequently been known to break—

A. While apparently without strain;
B. While under very light strain;
C. While under safe strain.

On the other hand, forgings have been known to break under tension strains with a very "short" fracture, while all attempts to break samples intentionally, fail to develop any such characteristics.

Let us first consider—

1. *The particular kind of forging.*

These may have been—

a. Reductions of large pieces to similar smaller ones;
b. Bent, split, branched, or distorted;
c. Welded.

a. Forgings of this class should be and are made at low temperatures and in few heats, uniformly distributed.

b. This class requires much higher heats and many of them according to design, and much local heating.

c. These require very high, almost melting heats, and while generally but few, they are always local.

The differences in results of pieces subjected to the treatment indicated will be as indefinite as there may be shapes and sizes.

2. *Particular condition each is in.*

The foregoing will at once show that the solid forgings produced by either of above methods, will be in as many conditions as there are changes of shape.

Those of class *a* may be (but are not necessarily) uniform in grain or texture or strain.

Those of class *b* must necessarily be, and always are, of all varieties of grain, texture, or strain.

Those of class *c* are always of positively differing grain and texture.

3. *Particular processes each has been subjected to.*

The various kinds of forgings may have been allowed to cool off on end or lying flat, singly or in piles, in the wet or dry, in-doors (summer heat) or out-of doors (freezing temperatures). They may have been heated to a moderate uniform heat after forging, and then allowed to cool likewise; they may have been annealed, and then cooled very slowly. Again, they, or parts of them, may have been quenched in water more or less cold, or even purposely hardened at some parts.

Each of these various processes produces its particular effect.

4. *The particular stress to which each might be subjected.*

The forgings may be strained in torsion, or reverse torsion; alternately in tension and compression (repeated stress); or, again, in vibratory or percussive stress, or in simple tension or compression, constantly or repeatedly applied. It is plain that each or all of these stresses might be applied successively to any single forging, and each may produce a different effect on grain or texture, according to previous condition or treatment; hence unless these be all known and defined their effects cannot be described.

5. *The degree of stress to which each might be subjected.*

It must be stated whether the stress applied is local or uniformly distributed, whether small or great. It must be clearly known whether even small stress produced an infinitely small permanent effect on the surface of the forging, like the blow of a hand-hammer on an anvil, which ultimately even changes not only the texture or grain, but also the shape, for it is well known that even the light blow of a tack-hammer will in a short time affect a hardened die-block because of the extremely local and intense effect of such action upon grain after grain. Having thus examined all the possibilities which may enter into the problem or question, it will be at once appreciated that the question cannot be answered in any reasonable manner.

However, if the question be so changed as to cover only one particular case, and that the very simplest of them all, then a concise and definite answer may be given.

The question thus simplified or specialized would, perhaps, become:

Does structural change take place in solid symmetrical forgings of uniform, homogeneous wrought iron or steel, having been brought to this condition by proper treatment, removing all accidental or internal stresses, as the result of continued vibrations either under a moderate uniformly distributed strain, always far within that limit at which even ever such slight change of shape takes place, or during absence of it?

Under these conditions an unequivocal and positive answer can be given, and it is: "That there never has been a case found where it could be demonstrated or was known that any change had taken place."

Moreover, there never has been a well-established case of change of structure which could not be readily explained after close examination as due to some definite excessive force.

It is of course assumed that all forces applied produce vibrations in wrought iron and steel.

Almost the only case which would positively prove what does take place is the constant sounding of its fundamental note of a piece of metal known to have been uniform initially.

I do not think that a tuning-fork which has not changed its weight and shape has ever altered in pitch, and is absolutely constant under similar conditions.

Did any structural change take place it could not possibly retain its pitch, and under the circumstances, and as a matter of fact, tuning-forks remain constant, except when corroding or when visibly injured externally.

The mere fact of fibrous or of crystalline appearance of a fractured forging does not warrant any conclusion as to the probable cause of such condition, unless the internal condition had been determined when the piece had been forged.

It is well known that a certain degree of heating will produce "fibrous" appearance in homogeneous materials, while a high heat is very apt to produce "crystalline" appearance. Other temperatures will produce neither the one nor the other, but "granular" structure. Hence one forging, having been heated differently at different points, may have either one or all of these structural variations, and *a priori* conclusions are valueless.

If there are these differences of structure, there will also be differences of initial strains, and these may, and generally do vary in course of time. This change of internal stress is known to produce differences of structure in course of time, and especially under effect of external forces. But this is only an abnormal case, and cannot be considered the invariable rule.

In the case of a gun forging, where the material is made uniform after each treatment or working, no change of structure has ever been demonstrated to occur.

Prof. F. R. Hutton.—There is scarcely any subject in structural material on which so many divergent opinions are to be elicited as on the question whether a structural change takes place in solid forgings of wrought iron or steel as the result of continued vibration, either under strain or under absence of it.

I put myself on record in a discussion of Mr. William Hill's paper on the "Apparent Crystallization under Shock of a Wrought Iron Hammer Head," which was published in our *Transactions*, volume vii., page 241.

The appearance which gives rise to what is called fibrous structure of wrought iron has been most satisfactorily described by Mr. Durfee, both in the discussion of the paper to which I have referred and in a recent lecture which he delivered before the Franklin Institute of Philadelphia. This conception makes the bar of wrought iron the result of rolling nodules of true metal into elongated particles with a cinder film between them, which film is drawn out with the particles. If a bar of wrought iron be subjected to the action of acid, then its effect upon the cinder films leaves the elongated metal in a sort of relief, so as to simulate a fibrous structure in any given length. When either sudden jerk or prolonged process of extension and releasing of strain tends to loosen these elongated masses from each other, and from the cinder envelope by which they are surrounded, the structure of the bar is broken down, and it loses its ability to withstand strain. Vibration is of two kinds: that which takes place across the axis of a body, as in violin strings and tuning-forks, and, secondly, lengthwise, or parallel to the long axis of the body, such as occurs in bolts which fasten hammer-heads to their helves and in the piston-rods of vertical steam hammers and the like. If the structure is of a sort to be loosened or disintegrated by this lengthwise extension, or crosswise flexure, it would seem intelligent to suppose that vibration, loosening the particles from each other, might ultimately cause the structure to change in character.

It will be interesting to gather together information as to the actual occurrence of a change of this sort, and there has been therefore propounded by one of our members the question, Will continued vibration alter the molecular arrangement of iron, and can you give illustrations of such crystallization from your own experience?

DCCXLVIII.

MEMORIAL NOTICES OF MEMBERS DECEASED DURING THE YEAR.

[NOTE.—A memorial monograph with portrait of the late J. F. Holloway, Past President of the Society, will be found at page 612 of the present volume, and following it, on page 623, the contributions which were made to the voluntary memorial session which was held at the time of the seventeenth annual meeting in New York, December, 1896.

The notices which follow refer to other members of the Society, who had not held presidential office.—*Secretary.*]

AMBROSE PLAMONDON.

Mr. Plamondon was a Canadian by birth. He was born in Quebec, December 31, 1833. At an early age the family moved to Oswego, N. Y., and at the age of twenty-two he erected the extensive starch works at that place, and for several years operated the plant. Shortly after, he decided to locate in the West, and after an extensive trip in northern Illinois, he located in 1857 in Chicago, with whose future commercial possibilities Mr. Plamondon was much impressed. His first firm was Plamondon & Palmer, but in 1864 the A. Plamondon Manufacturing Company was organized, of which he was president until his death. He was also connected with other companies as president, among them the Pneumatic Malting Company and the Saladin Malting Company.

He became a member of this Society in November, 1886. His health had not been robust for some time, and early in January, 1896, Mr. Plamondon took a trip to Arkansas, and, although his recovery from the local difficulty was rapid, he contracted a cold, which developed into a congestion of the lungs, and which so told upon his strength that, although he endured the journey from Hot Springs to Chicago, he failed gradually until his death at his home, February 19, 1896.

BENJAMIN MARVIN HARRIS.

Mr. Harris was the youngest son of Hon. Marvin Harris, of Orleans County, N. Y, and was born at Kendall, N. Y., November 15, 1866. His preparatory education was obtained at the State Normal School at Brockport, N. Y., after which he entered Cornell University, where he graduated in the course in mechanical engineering in 1890. Subsequently he took a course in electrical engineering. He had an aptitude for mechanics, and his standing in college was high.

After his graduation he went abroad, spending some time in Great Britain and on the Continent. Upon his return he entered the employ of the Heidenrick Construction Company, of Chicago, in October, 1891, where he remained one year. He was then engaged by the Hill Clutch Company, of Cleveland, and had charge of the construction for them of valuable machinery in various parts of the country. He was subsequently employed by the Electrical Printing Company of New York, and afterwards became estimating engineer for the Globe Electrical Construction Company of New York. He left the employ of this company in December, 1895, to accept the position of assistant master mechanic for the Guggenheim Smelting Company, and went to Aguas Calientes, Mexico, where one of their smelters is located. He was engaged there until about April 1, 1896, when he had an attack of typhoid and malarial fevers, from which, however, he became convalescent. Upon returning to his work he suffered a relapse, and died May 2, 1896. He was elected a junior member of the Society at the Providence meeting in 1891.

ROBERT J. GILMORE.

Mr. Gilmore was born in Calais, Me., in 1847. He was a machinist by trade, and in 1871 he removed to Providence to become foreman of the Allen Fire Department Supply Company. He later became superintendent, and at the time of his death was its sole proprietor. Mr. Gilmore's inventive capacity was directed in the line of his business, and the improved hose-couplings now in general use were devised by him, and he also had a share in the perfecting of what is known as the electric fountain, originally designed by Messrs. Gilmore & Dunlap. The ring traveller is universally made at this time by a machine invented by Mr. Gilmore.

He became a member of the Society in May, 1889, and died July 2, 1896. He was active in the body of Masons.

WALTER W. SMITH.

Mr. Walter Whittemore Smith was born March 8, 1850, in Troy, O. His mechanical ingenuity showed itself at an early day. He graduated in the mechanical engineering course in the Massachusetts Institute of Technology in 1871, and in the following winter he studied at the University of Berlin, although the rigorous climate prevented him from completing his intended course. In 1873 and 1874 he was in charge of the designing and draughting with the Barney & Smith Company, of Dayton, O., and in 1874–75 he established with Mr. J. H. Vaile the Smith & Vaile Company for the manufacture of pumps, pumping machinery, oil mill and general hydraulic work.

Mr. Smith was active in religious and educational work: a trustee of the Western Academy at Oxford, O. He became a member of this Society at the Cincinnati meeting in 1890, and passed away, after a long illness, in July, 1896.

JOSEPH S. LUDLAM.

Mr. Ludlam was born in Cape May County, N. J., September 16, 1837. He had the experience of every one who at that early day desired to enter the ranks of the engineers, taking his earlier training in the form of experience in the management of steam engines in out-of-the-way places where no one else could be found to do the work. He travelled very widely all over the world, working as miner and as mechanic, and has been a steamboat captain as well as marine engineer. During the war he was in Chinese waters, and was concerned in several of the schemes which were employed for the capture of the Confederate gunboat *Alabama* off Shanghai.

He was under the command of General Gordon (Chinese Gordon) during all of his career in the East. After the close of the war he was mining in the copper district at Lake Superior, and was called to succeed General Palfry as agent of the Merrimac Corporation in 1875, in spite of the statement which he made that previous to assuming that position "he had never seen the inside of a cotton mill." In 1886, when Mr. Ludlam joined the Society, that corporation was running over 100 steam engines and burning 1,800 tons of coal per annum, and his friends at that time spoke of his having shown very marked

ability and as being one of the most successful mill agents in his territory.

His death occurred August 4, 1896, after a long and serious illness.

J. T. RIDGWAY.

Mr. Joseph Theodore Ridgway was born at Tuckerton, N. J., January 22, 1838. His education was chiefly at the public schools of his native town, but he entered the navy as seaman July 15, 1861, and was first assigned to duty in West Indian and South American waters, and afterwards attached to the Atlantic Squadron blockading the Southern ports. In his early experience he cruised after the foreign steamers *Sumter* and *Nashville*, and later went on duty on the James River. In March, 1862, he assisted in the capture of the east coast of Florida, from St. Andrews to St Augustine, and was made acting master's mate in that year. In January, 1863, he was in the engagement with the Confederate ram *Chicora* at Charlestown, and received his wound. In August, 1864, he was made acting ensign. In January, 1865, he shared in the battle and capture of Fort Fisher, and during his naval services was twice promoted for gallantry. His chief engineers at sea were Messrs. Davis and Eddows. He was discharged March 28, 1865.

Resigning from the navy, he went to West Virginia at the close of the war and was engaged in prospecting for oil. During five years he was also in charge of the construction, erection, and testing of engines and in practice on the river boats. For four years he was with the Baldwin Locomotive Works of Philadelphia; passing through nearly all their departments, and finally doing contract work. He then moved to Trenton, N. J., and became vice president of the Star Rubber Company, whose plant he designed. In addition to this, he became vice-president and general manager of the Trenton Electric Light and Power Company, whose plant he planned and erected. **He was also consulting engineer for a number of establishments in his State. He was a member of the Board of Public Works of his city at the time of his death.**

He became a member of the Society at its Washington meeting in May, 1887, and passed away August 27, 1896.

ERNEST STOLL CRONISE.

Mr. Cronise was born in New York City, October 16, 1861. He graduated from Stevens Institute of Technology in Hoboken in 1881 with the degree of Mechanical Engineer. He spent three years in the motive power department of the Pennsylvania Railroad and in the New York, West Shore and Buffalo Railway as apprentice in the machine shop, in the drawing room, and, in the department of the road, foreman of engines. He was for over a year assistant inspector of car construction for the West Shore Railway at Pullman.

On leaving this assignment he entered the Worthington Hydraulic Works of Brooklyn as machinist, remaining one year in this capacity, one year as draughtsman, and serving on their erecting department for some time, and as salesman in their Western offices. Returning to New York, he was put in charge of the meter department of the Worthington Company, which was the position he held at the time of connecting himself with the Society at the New York meeting in 1891.

His death took place September 19, 1896.

LEVI K. FULLER.

Levi Knight Fuller was born February 24, 1841, in West Moreland, N. H. His parents moved to Bellows Falls in 1845, and with the consent of his parents he left home in 1854 to learn a trade in Brattleboro, Vt. His first trial was at the printer's trade, but his tastes did not lie that way, and he much preferred to work out woodcuts with his knife for illustrating the local journal published by his employer. He became a telegraph operator at Burlington, Vt., but really began his life-work by becoming apprentice in the firm of Messrs. Chubbeck & Campbell, of Roxbury, Mass., and attended evening schools in Boston. Returning to Brattleboro in 1860, he opened a machine shop, making a specialty of wood-working machinery, and began also the manufacture of sewing machines.

In 1866, in connection with his brother-in-law, Mr. J. J. Estey, the firm of Jacob Estey & Company was created for the manufacture of the Estey organ, and Mr. Fuller became the superintendent of the mechanical department. It was in this relation that Mr. Fuller became best known. While reed organs were manufactured in the forties, the business did not attain large proportions until after the war of 1861-65. Mr. Fuller took out more than a hundred patents during his connection with his chosen work, although many of them were in different lines from his chosen specialty.

In 1872 President Grant offered Mr. Fuller an appointment as one of the commissioners to the Vienna Exposition, and although the appointment had to be declined for business reasons, it was the beginning of an activity in civic and public affairs which lasted during the rest of Colonel Fuller's life. He organized in 1874 a battery of the Vermont National Guard, and was for a long time its captain. In 1880 he was elected State Senator, in 1886 Lieutenant-Governor, and in 1892 Governor of Vermont. In 1891 Mr. Fuller, although in impaired health, became an active member of the committee whose ultimate action resulted in the determination of what is known musically as international pitch, and in that work he showed a practical familiarity with the science of acoustics which has been one of his great claims to distinction. Mr. Fuller made a collection of standard tuning forks, numbering several hundreds, and which is said to be by far the most remarkable and complete collection of its kind in existence. It was exhibited at the World's Fair in 1893.

Mr. Fuller took a deep interest in educational matters. He was a trustee of the schools of his State; he bought and presented a school for exact agricultural training for the Vermont Academy at Saxton's River; he added an equatorial telescope to the equipment of the school, and in connection with the late B. F. Sturtevant, of Boston, he contributed largely to the erection of a special hall, which has been known as Fuller Hall.

Governor Fuller was one of the charter members of this Society. His death took place October 10, 1896, after a long and painful illness.

SYLVANUS DYER LOCKE.

Sylvanus Dyer Locke was born September 11, 1833, in Richfield, Otsego County, N. Y. He received his education at Fairfield Academy, Fairfield, Herkimer County, N. Y., supporting himself at the age of seventeen by teaching district school in the winter. In his twenty first year he became principal of one of the large graded, or union, schools in New York State. In 1856-7 he was engineer and draughtsman on the Wisconsin Central Railroad, but after the financial panic of that year he became again principal of a seminary in Columbus, Ky., although taking part in 1858 in the triangulation which was in progress over the Mississippi River. In 1859-60 he returned to the North, admonished by the unsettled political conditions of that time, and entered the law office of Bennett, Cassoday & Gibbs, in Janesville, Wis. In 1861 he was admitted to the bar, but devoted most of his time to the duties of city engineer and county surveyor, in which capacity he served for eight years, from 1861 to 1869. His work of that period involved surveys for slack-water navigation of Rock River in Wisconsin and of the water-power of Cedar River at Cedar Falls, Ia.

The principal direction of Mr. Locke's mind, however, even during these years, was that in which it obtained later its full scope - in the development of machinery for harvesting. It was while visiting friends on a farm in 1860 that he first saw the need of an automatic binding harvester. His acceptance of the position of surveyor was based on his desire to have an income which he could spend for the development of his ideas. Against the warnings, advice, and even entreaties of his friends, who declared that he was pursuing a will-o'-the-wisp and sacrificing the best years of his life in hopeless efforts to obtain the unattainable, he pursued unfalteringly his purpose. Year after year passed in what appeared to be fruitless efforts to build a successful machine. The first machine he built bound well in the shop, as well as any machine ever built since. It did not fail there nor at fairs, but it could not bind successfully in the field. The difficulty was in the presentation of the grain to the binder in proper shape to be bound. He applied binders to self-raking, hand raking and hand forking machines, only to meet with failure, always with failure. Each year he applied a binder to a reaper only to meet with defeat, and each year the experiences and failures of the preceding year were again repeated, and so for nine long years he struggled persistently and discouragingly on.

In February, 1869, he entered into a contract with Walter A. Wood in relation to grain binders. He wanted to put a binder on a side-delivery endless-apron machine. His experience had convinced him that no rake could sucessfully deliver grain to a binder, and this conviction has been sustained and fully confirmed by all subsequent experiences in the field. No rake has ever been made to work with the binder. Only a side-delivery harvester delivering a stream of grain continuously to the binder has been made to work; everything else has failed. But to satisfy Mr. Wood 'he applied a binder to his pet machine, his chain rake reaper. He had no confidence in the venture, and in the field in the early harvest of 1869 it failed. Anticipating failure, he had quietly, and unknown to Mr. Wood, and before the harvest of 1869, built a model of an automatic binding harvester that worked in a new manner and upon radically different principles.

Before this date inventors and experimenters in the harvest field had dealt only with massed bundles. Either the reaper delivered a predetermined massed gavel or the grain was measured by cut-off mechanism before its delivery to the binder. No one had succeeded in binding directly from a stream of grain; hence all failed. The model which he had built prior to the harvest of 1869, and the full-sized machine built during and immediately after that harvest, marked a new departure in grain binders and illustrated a new method of binding from a stream of grain which proved a success from the very beginning, and which has been adapted by every practical builder, and entered into every successful machine. This machine of 1869 was thoroughly tested in the harvest of 1870, proving to be a pronounced and grand success, binding many acres well. This appears to have been, and is believed to have been, the first successful automatic binding ever done.

Though the machine was a success, he was not yet out of the woods. Many difficulties had to be met and overcome. Some of these related to the strength of the parts of the machine, while others, and a greater part of the difficulties, referred to the condition of the grain in the field. Whether short and thin or very tall, like some rye; whether green and heavy, or overripe and very light and puffy; whether wet or dry, straight or down and tangled by the storm, the condition of the grain presented many difficulties which had to be met and overcome by special construction or adaptation of the machine. Finally, the machine was completed and put upon the market in 1873. After the harvest of 1872 and before the harvest of 1873 five harvesters and binders, or automatic binding harvesters, were built. One of these was sent to the Vienna Exposition, two were retained for experimental use, and the other two were sold, one to I. P. Cook, of Janesville, Wis., and the other to Thomas Cameron, of Richmond, Walworth County, Wis., and by them used during the harvest of 1873, binding to their satisfaction all of their grain. Unquestionably these were the first machines ever sold to actual farmers, and they were sold at least two years in advance of the sale of any other machine, and anticipated the great extensions in this department which were shown at the Centennial Exhibition of 1876. For two years he stood alone without competition. Since then, of course, others have entered the field. Many of the features or parts of the binder invented and used by him are known to be necessary and absolutely essential to the construction and operation of a successful self-binder. He may not be accorded full credit for what he has done, but he had the consolation of knowing that many of the essential features of the binder have had to be adopted and appropriated by every builder, and have entered as component integral parts of every successful machine. One of these essential features related to the general construction of the binder, and consisted essentially of a binder frame overhanging and subtending the binding receptacle from the end of the grain. This invention not only holds the widely separated diverse parts of the binding mechanism above and below the grain in exact co-working position, but it secures an open throatway for the passage of long grain, so avoiding the widening of the machine, and dispensing with one of the supports at the ends of the grain.

Another and very essential feature related to binding from a stream of grain, and consists essentially of the delivery mechanism of the harvester delivering a stream of grain continuously to the binding receptacle, the binding receptacle receiving the stream continuously delivered by the harvester, and an automatic binder working in the receptacle to separate the stream into gavels, and bind and discharge them from the machine without interfering with the flow of the stream.

Another and a third essential related to the sizing of the bundles, and consists essentially of the delivery mechanism of the harvester delivering a stream of grain continuously into a binder, an automatic binder working in and with the stream to separate it into gavels, and a clutch interposed between the delivery mechanism and the binder, to size the bundles by producing intermittent motion of the binder while the delivery mechanism works continuously.

The fourth essential feature invented and used by him related to binding the grain centrally, and consists essentially of the delivery apparatus of the harvester delivering a stream of grain continuously to a binding receptacle, an automatic binder working in the receptacle to separate the stream into gavels, and adjustable bodily along the end of the delivery apparatus.

Another and fifth essential feature related also to binding the grain centrally, and consists essentially of the delivery mechanism and the wind-board secured to the harvester and overlying the receptacle to form an end wall, marking the butts of the bundle while the receptacle adjusts beneath.

The sixth essential feature related to the separating of grain into bundles, and consists essentially of ledges on either side of the mouth of the throatway of the receptacle, into which the separator or needle-arm passes. The ledges hold back the stream of grain and prevent it, however entangled with the bundle, from following it and being dragged down into the throatway back of the needle-arm or back of the separator, which is inclined to clog the band securing mechanism or to choke down the machine.

The seventh essential feature related to the forming and combing of the bundle, and consists essentially of springs on either side of the binding receptacle, near its tail, which hold and straighten the forming bundle and comb it on its discharge of straggling grain, which would otherwise discharge or follow the bundle to the ground.

The eighth essential feature related to a method of supporting and sizing the bundle, and consists essentially of a spring pawl or detent which holds the binder when uncoupled from the harvester, and not otherwise held from retrograde motion or other displacement of the needle-arm and other parts of the machine.

The ninth essential feature related to the separating of the cut from the uncut grain, and consists essentially of a divider having its outer line leading the cut grain onto the horizontal carrier. This invention overcame the difficulty incident to the use of the horizontal canvas apron which took the grain from the cutters laterally to the elevating mechanism of the machine. This endless carrier is a simple canvas apron provided with no adequate means for attacking the cut grain when separating it from the uncut or standing grain.

The tenth essential feature related to a yielding or elastic compressing arm of a grain binder, and consists essentially of a cam arm, a spring arm, and interposed spring to operate the compressor.

All of these features, with the possible exception of the eighth, the ninth, and the last, the pawl and ratchet, the shoe bracket, and the compressor, have been and are used on all successful automatic binding harvesters, and are absolutely essential on any one of them. Other features of less importance invented by Mr. Locke have gone into partial use, and many other features, very important and fundamental, allowed to him on the reissue of poorly drawn and defectively drawn patents, have been impliedly declared void and worthless.

Grain binders of his invention and made under his authority, and corresponding substantially to a certain patent, were built from 1869 to 1881. In 1878 over 5,000 machines were built and sold, and from this time forward medals, awards, prizes, diplomas, cups, and money flowed in as the result of successful competitions. During that entire period as many as 30,000 were manufactured by the Wood Company. Many thousands of machines have been built since then under his direction and involving five claims or more of that same patent. Since 1875, probably in the neighborhood of 3,000,000 machines, embodying the claims aforesaid, have been built by others.

Mr. Locke severed his connection with the manufacturing company in 1880. He was a victim of the decisions of that period by the Supreme Court concerning the rights which attached to inventors upon the reissuing of their original patents, and in consequence of somewhat of controversy which arose as to the use of Mr. Locke's name in connection with his inventions manufactured by other persons, he identified himself with a harvester factory of his own in 1881-83.

He was president of the Hoosick Falls Electric Light and Power Company 1887-89, having surveyed and laid out its water-power and electric-light plant. At the time, however, that he connected himself with the Society, at its Providence meeting in 1891, he had practically retired from professional work other than the supervision of the working of the inventions which he had made. In addition to the harvesting machinery with which he is best known, he had taken out 100 other patents, covering railroad couplings and permanent way, fabric-testing machinery, hop-picking machinery, underground conduits, etc. His steel-link belting was one of the things on which he was engaged at the time of his death.

For several years Mr. Locke had been in an enfeebled physical condition, and his final sickness was caused by a cold which developed into congestion of the lungs.

ROBERT EMORY MARSHALL.

Mr. Marshall was born at Leeds, England, September 4, 1862, at which time his father was United States consul in that city. Upon the return of his father's family to America and during his early manhood he received preparatory education at the Columbian University in Washington, D. C., and in 1881 he became an apprentice with the Pennsylvania Railway at the Altoona shops. His ability and diligence secured for him the appointment as assistant road foreman of engines, and in 1890 superintendent of motive power on the Philadelphia, Wilmington and Baltimore Railroad. In 1895 he became superintendent of the Altoona division on the main line. His taste lay in the transportation department of railroad work, and he was considered to have a bright future before him. His death took place November 30, 1896, in Washington, D. C., at the home of his brother, during an acute attack of melancholia, the result of nervous prostration from overwork. He joined the Society in November, 1890.

DAVID LEONARD BARNES.

Mr. Barnes was born August 23, 1858, at Smithfield, R. I., near Providence. His father died when the son was but eleven years of age, and young Barnes became the man of the family. His education was obtained in the high school, and at fifteen years of age he began his professional work with a civil engineer, and was a surveyor for three years in the field and on city work. In 1876 he entered Brown University at Providence, and was for part of a term a special student at the Massachusetts Institute of Technology of Boston. His predilection for the locomotive took him into the shops of the Rhode Island, the Hinckley, and the Rome works, and he spent eight years, from

1879 to 1887, at this work, ending as chief draughtsman and mechanical engineer for the Rhode Island Company. He was also beginning at this time his practice as consulting engineer. In December, 1888, he joined the editorial staff of the *Railway Gazette* of New York, and up to the time of his death maintained an engineering office in Chicago, with a New York City connection. He was identified as consulting engineer with the Baldwin Locomotive Works and the Westinghouse Electrical and Manufacturing Company in designing a set of standard electric locomotives, and was consulting engineer for the Chicago and South Side Rapid Transit Company. He was a frequent and valued contributor to the transactions of the railway societies and to the national societies of engineers.

He became a member of the Society at its Scranton meeting, October, 1888. In 1896 his health showed indications of failure, but no one suspected its ultimate fatal character. He made a trip to Europe in search of rest, but on his return his strength declined slowly, and he passed away December 15, 1896, in New York City.

FRANCIS A. WALKER.

General Walker was born in Boston, Mass., July 2, 1840. His father, Amasa Walker, was a member of Congress and a professor with rare intellectual attainments, and was distinguished as a writer on political economy.

When the war of 1861 broke out Mr. Walker was a law student in the office of Devens & Hoar, in Worcester, having graduated from Amherst in the class of 1860. He enlisted promptly and became sergeant-major of the Fifteenth Massachusetts Infantry, passing successively through the grades of captain, major, and lieutenant-colonel, brevet colonel, and brevet brigadier-general of volunteers. He became chief of staff with General Hancock, and at Gettysburg held the rank of lieutenant-colonel. His sufferings during six weeks in Libby prison incapacitated him for further field service after his release, but he was brevetted a brigadier-general by General Hancock's request. Immediately after the war he married, and was for three years teacher in Williston Seminary. He served on the editorial staff of the *Springfield Republican*, and was for two years deputy special commissioner of United States revenue. He was superintendent of the census in 1870 and in 1880, and commissioner of Indian Affairs in 1871–72. In 1872 the professorship of political economy was founded at Yale University, and until 1881 he filled this chair. In 1881 he was called to the presidency of the Massachusetts Institute of Technology in Boston, where he introduced the studies of history and political economy into an institution founded for distinctly technical purposes, and was its president during its period of most active and successful development. He was, besides, for two years lecturer in Johns Hopkins University in Baltimore, and for a short time university lecturer at Harvard. He received degrees from more institutions of learning than any American of his time. He was chief of the Bureau of Awards at the Centennial Exhibition in 1876, a commissioner to the International Monetary Conference in 1878, president of the American Economic Association in 1880, and was at his death a member of the National Academy of Sciences. One of his interesting suggestions was the publication, in connection with the census of 1880, of special monographs on subjects connected with power and manufactures; and many of these contributions are most interesting and valuable. He was made an honorary member of this Society in 1886, following the successful Boston convention of the Society the previous winter, whose sessions were convened at the Institute, and he passed away January 5, 1897, from apoplexy.

His contributions to literature were almost entirely in the field of economics, and, besides a great number of occasional addresses, include: "The Compendium of the Ninth Census," "The World's Fair," "A Critical Account of the Philadelphia Exhibition," "Statistical Atlas of the United States," "Some Results of the Census of 1870," "United States Centennial Commission-Awards in National, State, and Other Collective Exhibits," "Compendium of the Tenth Census," "Land and Its Relations to Rent," "The Indian Question," "Growth and Distribution of Population," "Address at Soldiers' Monument Dedication at North Brookfield," "Money," "Money and Its Relation to Trade and Industry," "Principles of Political Economy," and "History of the Second Army Corps in the Army of the Potomac."

JOHN BARNWELL CLEMENTS.

Mr. Clements was born in London, England, in 1851. His parents came to America in 1859, and, settling in St. Louis, his first education was received in that city. After graduation from the St. Louis University he entered the Iron Mountain system, and worked himself up from a very subordinate position until he reached in a few years the grade of chief engineer; and upon the company's consolidation with the Missouri Pacific system he became principal assistant engineer for the entire group of roads. While in these relations he was the immediate supervisor of the construction of the Oak Hill or Carondelet branch. In 1889 he resigned from the railway service to become vice-president and general manager of the Christy Fire Clay Company, and was also president of the St. Louis Sanitary Company, and largely interested in other industrial enterprises of his city. He made a principal specialty of adapting refractory material to specially exacting conditions, such as arise with special-fluxes and with the high temperatures met in the manufacture of glass.

Too close application to business and the great number of engagements which his very successes in his profession had grouped about his life compelled him, in November, 1896, to retire in search of health to the Hot Springs of Arkansas. It is supposed that in a fit of mental depression, incident to his physical state, he took his life by his own hand, March 17, 1897. He connected himself with the Society previous to the St. Louis convention of 1896, in which he took active interest.

JOHN KEESE HALLOCK.

Mr. John Keese Hallock was born at Chagrin Falls, O., April 25, 1844. His father had been one of the early settlers of Erie County in 1820, to which they had moved from their old and early location on Long Island. As the son of a Methodist minister, Mr. Hallock's education was carried on in a number of different places, but was completed in 1862 at the Academy in Waterford, after which he took up the study of law, and was admitted to the bar in Ohio in 1865, and in Pennsylvania in 1867. He was for one year in the office of the Hon. A. B. Richmond, of Meadville. In 1868 he selected Erie as the centre for his practice, which a certain mechanical taste early directed into the channels of the patent attorney, and in which, besides the usual professional success, he is signalized by certain inventions of his own in the lines of industrial chemistry, steam, and electrical engineering. Mr. Hallock was a deputy United States marshal from 1869 to 1870, and one of the alternate commissioners for his State to the fair of 1893. He connected himself with the Society at its Scranton meeting in 1889 in the associate grade, and passed away April 2, 1897, from heart disease, after two years of suffering and practical retirement from active business.

THEODORE RENO FOSTER.

Mr. Foster was born April 6, 1865, at Fitchburg, Mass. After the usual preparatory public school training, he received the degree of B.S. at the Institute of Technology in June, 1886, and immediately upon graduation entered the Canadian Locomotive Works at Kingston, Ont., in the drawing room, from which he was transferred the following year to the drawing room of the Chicago, Burlington and Quincy Railroad at Aurora, Ill., and was promoted to the assistant master mechanic in 1888. In the following year he was transferred to Galesburg, Ill., but in 1894, on account of failing health, he was, at his own request, transferred from Galesburg, Ill., to Billings, Mont., taking charge of the mechanical department of the Billings line, a part of the Burlington system. In 1896 he was made mechanical engineer of the Denver and Rio Grande Railroad, with headquarters at Denver, but, his health failing, he was compelled in February, 1897, to retire from his chosen business, and he died at his home in Boston, April 15, 1897, from consumption. He became a member of the Society at the New York meeting of 1892.

GEORGE H. PLATT.

Mr. Platt was born May 7, 1854, in New Haven, Conn. After the usual preparatory school training, he became an apprentice in the machine shops of the New York, New Haven and Hartford Railroad in his native town, taking evening instruction in mathematics and drawing. He served three years as journeyman, one year on the road, four years as foreman of the erecting gang, and eight years as foreman at the engine-house and repair shops at the Harlem River station of the New Haven road. He was in that relation when he connected himself with the Society in November, 1889. Since that time he has been in various departments of professional work, and at the time of his death was engaged as assistant master mechanic of the Panama Railway, with headquarters at Colon, on the isthmus, receiving proper remuneration and fully enjoying a return to his old specialty. He contracted a severe and rapid case of yellow fever in some unexplainable way, and died, after a brief illness, May 23, 1897.

JOHN HALDEMAN COOPER.

In the death of Mr. John Haldeman Cooper there has passed away from the ranks of the mechanical engineers one of its widely known veterans. He was born at Columbia, Lancaster County, Pa., February 24, 1828. His parents were Quakers. He exhibited the tendency to mechanical pursuits even as a lad, devoting many of his early years to working both in wood and metal and at carpentering and machine making; but his professional career may be said to have begun in Baltimore in connection with the Northern Central Railway, and later in the drawing room of A. & C. Reeder, 1851–52. He served three years as draughtsman in the Norris Works at Norristown, Pa., on mining and general machinery, and for several years on agricultural machinery, in patented inventions, and in the water department of Philadelphia.

When the Civil War broke out he found a scope for his talents as an engineer in charge of the installation of the machinery in the United States monitors *Lehigh*, *Sangamon*, *Monadnock*, and *Agamenticus* during his one and three-quarter years' connection with the I. P. Morris Company. Toward the close of the war he associated himself with Mr. Jacob Naylor, with whom he remained seventeen and one-half years. During this period he produced some of the earliest examples of stationary compound engine work. In 1881 he took a trip to California for the sake of his health, where he remained three years, and on his return became connected with the Southwark Foundry and Machine Company, with whom he remained until 1891. He became connected during these seven years with some very large work, particularly the centrifugal pumping plant for the United States Navy Yard at Mare Island, Cal. Since 1891 Mr. Cooper has been consulting engineer and expert, giving special attention to the division of power plant practice which is connected with the cooling of condensing water.

Mr. Cooper is perhaps as well known for his treatises on belting as for any other of his literary achievements. He was a member of the Franklin Institute, and has served on its Committee on Science and Arts for many years, which gave him an opportunity to prepare monographs of conspicuous merit; reports on compound locomotives and on the new forms of impulse water wheel are perhaps those of greatest note. He also contributed several papers of interest to the Society's *Transactions.* He connected himself with the Society in May, 1880, and has thus the distinction of being one of its charter members. He died at his home in Philadelphia, May 9, 1897.

JAMES EDMUND GRIST.

Mr. James Edmund Grist was born October 10, 1864, at Wolverton, England. After a preparatory education in public school and home study, he was apprenticed at engine building and repair work with B. W. Grist & Company, of Reading, Pa., in 1879, and after three years in the shop was promoted to the drawing room and was made foreman of the machine shop in 1884. In 1887 he removed to Philadelphia and was employed as foreman of a machine shop of the Pennsylvania Iron Works. Was made general foreman in 1890, and superintendent in 1892. This position he held until the time of his death, which occurred May 22, 1897.

He connected himself with the Society in 1890 as a junior member. and was promoted to full membership in 1893.

DE VOLSON WOOD.

De Volson Wood was born near Smyrna, N. Y., in 1832. His early education was that of the public school, with an additional six weeks in a private academy and two terms in Cazenovia Seminary. In 1849 he began teaching, with which he has been occupied ever since, his subsequent education being received while he was himself instructing. Mr. Wood's first charge was at Smyrna, his native town, where he taught for three terms. Desiring to continue his education, he then went to the Albany State Normal School, continuing, however, his work as instructor, and graduated thence in 1853. He then obtained his first position as principal in the Napanoch School, Ulster County, N. Y., and there commenced teaching one week after his graduation. Returning to the closing exercises of the Albany Normal School during a week of vacation, the first he had had since he commenced teaching in 1849, Mr. Wood was greeted by the principal with the offer of an assistant professorship in mathematics. This offer he accepted, and at the beginning of the next scholastic year Professor Wood (as he now became) was a member of the faculty of the school from which he had graduated one year before. Still being desirous of extending his studies, after a year at the Albany Normal School he went to the Rensselaer Polytechnic Institute, Troy, in 1855, entering the junior class, but still did not give up teaching, as the preparatory department of the institute was being organized at that time, and he was asked to take charge of the mathematical studies of the preparatory students. He was thus enabled to pay for his entire education by the proceeds of his teaching. On graduating at Troy with the degree of C.E., Professor Wood went West, although in rather troublous times, with introductions from the principals of the Albany and Troy schools, hoping to obtain a position in Chicago. Advised by a friend to go by way of the lakes instead of by rail, he stopped for a few days at Detroit and went to see the University of Michigan buildings at Ann Arbor. After hearing President Tappan, of the university, lecture, Professor Wood introduced himself, and was told of the non-appearance of a recently appointed professor of civil engineering. He consented to take the professor's place for a few days, and remained there fifteen years, receiving during that time the honorary degrees of A.M. and M.Sc. from Hamilton College and the University of Michigan, respectively. During this time he organized the department of civil engineering at Ann Arbor, which is still a noted one, and retains evidences of his work, and among the since prominent men then under him were Brush of electric fame and Professor Webb of Stevens Institute. A record of Professor Wood's journey westward, the queer chance which led to the obtaining of his University of Michigan professorship, and his trials, financial and otherwise, in his early work there before he obtained his full status as a professor, would form a most interesting history. Indeed nothing but lack of space prevents us recounting more of the delightful autobiographical anecdotes courteously related to our reporter in a most entertaining interview. At about the time when the original building of Stevens Institute was completed, Professor Wood, by invitation of President Morton, came down to look over the prospects of the new venture. Shortly after his return to Ann Arbor he received an offer of a professorship of mathematics and mechanics, and a desire to return East made him at once accept. The faculty of the University of Michigan, however, on hearing of his acceptance, at once increased his salary by five hundred dollars, and personally escorted him to a telegraph office that he might telegraph a recall of his acceptance. Events in the ensuing year, however, caused Professor Wood to resolve that a repetition of such an offer should not be passed over so lightly, so a second offer from the Stevens trustees one year later caused his advent in 1872 to Stevens Institute, where he has faithfully labored ever since. Possibly the greatest satisfaction to Professor Wood is the success he has had in the class-room. Many of his pupils have returned, years after graduation, to compliment him on his success. Mr. Brush, the electrician, says, "Prof. DeVolson Wood got more genuine study out of me than any other teacher I ever was under." The *American Mathematical Monthly* says:

"The civil, mechanical, and electrical engineers, architects, railroad managers and presidents, college professors and presidents, etc., who formerly were Professor Wood's students, and who now are scattered over the whole world, would, if simultaneously rounded up, form the most intelligent army that ever moved on the face of this mundane sphere."

Some years ago Professor Wood went on a trip through New Mexico and Colorado, and in the whole course of his journey he found that he only stopped at one place where he could not have been immediately identified at a bank by one of his former pupils.

Professor Wood was a member of the American Society of Civil Engineers from 1871 to 1885. He has been a member of the American Association for the Advancement of Science since 1879, and he was the vice-president of this association in 1885. He was a member of the American Mathematical Society, and an *honorary* member of the American Society of Architects; he was the *first* president of the Society for the Promotion of Engineering Education, and was the engineer of the Ore Dock, Marquette, Mich., in 1864. He was the inventor of "Wood's Steam

Rock Drill," 1866 and later; and he was also the inventor of other machinery.

In addition to being one of the pioneers of modern engineering theory and instructions, comparatively late in life he took up a new subject, thermodynamics, upon which he has written a most useful book.

Among the articles contributed by Professor Wood to various magazines, books, etc., may be mentioned "Alligation," to the *New York Teacher*, and highly commended in *Brook's History of Arithmetic;* "Foundations," in *Johnson's Cyclopedia of Mechanics*, in *Appleton's Cyclopedia of Mechanics;* "Luminiferous Aether," in the *London Philosophical Magazine* and in *Van Nostrand's Science Series*, No. 85, and "Radiant Heat Not an Exception to the Second Law of Thermodynamics," in the *American Engineer.*

He has contributed to the *American Mathematical Monthly*, to the *Michigan Journal of Education;* the *Journal of the Franklin Institute*, the *Railroad Gazette*, the *Mining and Engineering Journal*, the *National Educator*, the *Mathematical Visitor*, the *Analyst*, *Van Nostrand's Engineering Magazine*, the *Educational Notes and Queries*, the *American Engineer*, *Science*, the *Annals of Mathematics*, the *New England Journal of Education*, the *Mathematical Magazine*, the *Engineer*, the *Barnes's Educational Monthly*, the *Mathematical Messenger*, and an article to the *American Machinist* which was largely quoted by prominent European engineering magazines, and is the *author* of the following books: *Trusses, Bridges, and Roofs*, published in 1872; *Wood's Edition of Mahan's Civil Engineering*, published in 1873; *Treatise on the Resistance of Materials*, published in 1873; *The Elements of Analytical Mechanics*, published in 1876; *Wood's Edition of Magnus' Lessons in Elementary Mechanics*, published in 1878; *Coördinate Geometry and Quaternions*, published in 1879; *Key and Supplement to the Elements of Mechanics* and *Key and Supplement to the Mechanics of Fluids*, both published in 1884; *Trigonometry*, published in 1885; *Thermodynamics*. published in 1887 and enlarged in 1889; and *Turbines*. published in 1895.

Professor Wood joined the Society in May, 1887. Advancing age and infirmities had been interfering with his active service, but his death, June 27, 1897, was sudden and unexpected at the last.

HENRY B. STONE.

Mr. Stone was born in New Bedford, Mass., September 4, 1851. After preparing for Harvard at Phillips Academy, he graduated in 1873, and at once entered the shops of the Boston Manufacturing Company at Waltham. Finding a need for advanced training, he became a student at the Massachusetts Institute of Technology during 1876-77, and in 1877 entered the ordnance foundry of the South Boston Iron Company. His best early fame was won on the Chicago, Burlington and Quincy Railway, which he entered at the Aurora shops, and in which he moved steadily upward, becoming superintendent of rolling stock and division superintendent, and in 1881, moving to Chicago, was made general manager and second vice-president. In May, 1890, he left railroading to become president of the Chicago Telephone Company and the Central Union Telephone Company, and later also the president of the Bell Telephone Company of Missouri. These positions he resigned July 1, 1897, and his sudden death on July 5th was the result of a most deplorable accident from the premature discharge of a firework. He became a member of the Society at its outset in April, 1880.

INDEX TO VOLUME XVIII.

[NOTE.—Names of Authors and Debaters are printed in SMALL CAPS; Titles of Papers are printed in *italic type*.]

no card
3-18-40